MIL-HDBK-419A
29 DECEMBER 1987

SUPERSEDING
MIL-HDBK419
21 JANUARY 1982

MILITARY HANDBOOK

GROUNDING, BONDING, AND SHIELDING FOR ELECTRONIC EQUIPMENTS AND FACILITIES

VOLUME 1 OF 2 VOLUMES
BASIC THEORY

AMSC N/A

EMCS/SLHC/TCTS

DISTRIBUTION STATEMENT A. Approved for public release; distribution is unlimited

DEPARTMENT OF DEFENSE
WASHINGTON DC 20301

MIL-HDBK-419A

GROUNDING, BONDING, AND SHIELDING FOR ELECTRONIC EQUIPMENTS AND FACILITIES

1. This standardization handbook was developed by the Department of Defense in accordance with established procedure.

2. This publication was approved on 29 December 1987 for printing and inclusion in the military standardization handbook series. Vertical lines and asterisks are not used in this revision to identify changes with respect to the previous issue due to the extensiveness of the changes.

3. This document provides basic and application information on grounding, bonding, and shielding practices recoin mended for electronic equipment. It will provide valuable information and guidance to personnel concerned with the preparation of specifications and the procurement of electrical and electronic equipment for the Defense Communications System. The handbook is not intended to be referenced in purchase specifications except for informational purposes, nor shall it supersede any specification requirements.

4. Every effort has been made to reflect the latest information on the interrelation of considerations of electrochemistry, metallurgy, electromagnetic, and atmospheric physics. It is the intent to review this handbook periodically to insure its completeness and currency. Users of this document are encouraged to report any errors discovered and any recommendations for changes or inclusions to: Commander, 1842 EEG/EEITE, Scott AFB IL 62225-6348.

5. Copies of Federal and Military Standards, Specifications and associated documents (including this handbook) listed in the Department of Defense Index of Specifications and Standards (DODISS) should be obtained from the DOD Single Stock Point: Commanding Officer, Naval Publications and Forms Center, 5801 Tabor Avenue, Philadelphia PA 19120. Single copies may be obtained on an emergency basis by calling (AUTOVON) 442-3321 or Area Code (215)-697-3321. Copies of industry association documents should be obtained from the sponsor. Copies of all other listed documents should be obtained from the contracting activity or as directed by the contracting officer.

PREFACE

This volume is one of a two-volume series which sets forth the grounding, bonding, and shielding theory for communications electronics (C-E) equipments and facilities. Grounding, bonding, and shielding are complex subjects about which in the past there has existed a good deal of misunderstanding. The subjects themselves are interrelated and involve considerations of a wide range of topics from electrochemistry and metallurgy to electromagnetic field theory and atlmspheric physics. These two volumes reduce these varied considerations into a usable set of principles and practices which can be used by all concerned with, and responsible for, the safety and effective operation of complex C-E systems. Where possible, the Principles are reduced to specific steps. Because of the large number of interrelated factors, specific steps cannot be set forth for every possible situation. However, once the requirements and constraints of a given situation are defined, the appropriate steps for solution of the problem can be formulated utilizing the principles set forth.

Both volumes (Volume I, Basic Theory and Volume II, Applications) implement the (Grounding, Bonding, and Shielding requirements of MIL-STD-188-124A which is mandatory for use within the Department of Defense. The purpose of this standard is to ensure the optimum performance of ground-based telecommunications equipment by reducing noise and providing adequate protection against power system faults and lightning strikes.

This handbook emphasizes the necessity for including considerations of grounding, bonding, and shielding in all phases of design, construction, operation, and maintenance of electronic equipment and facilities. Volume 1, Basic Theory, develops the principles of personnel protection, fault protection, lightning protection, interference reduction, and EMP protection for C-E facilities. In addition, the basic theories of earth connections, signal grounding, electromagnetic shielding, and electrical bonding are presented. The subjects are not covered independently, rather they are considered from the standpoint of how they influence the design of the earth electrode Subsystem of a facility, the selection of ground reference networks for equipments and structures, shielding requirements, facility and equipment bonding practices, etc. Volume I also provides the basic background of theory and principles that explain the technical basis for the recommended practices and procedures; illustrates the necessity for care and thoroughness in implementation of grounding, bonding, and shielding; and provides supplemental information to assist in the solution of those problems and situations not specifically addressed.

In Volume II, Applications, the principles and theories, including RED/BLACK protection, are reduced to the practical steps and procedures which are to be followed in structural and facility development, electronic engineering, and in equipment development, These applications should assure personnel equipment and structural safety, minimize electromagnetic interference (EMI) problems in the final operating system; and minimize susceptibility to and generation of undesirable emanations. The emphasis in Volume II goes beyond development to assembly and construction, to installation and checkout, and to maintenance for long term use.

Four appendices are provided as common elements in both volumes. Appendix A is a glossary of selected words and terms as they are used herein, If not defined in the glossary, usage is in accordance with Federal Standard 1037, Glossary of Telecommunication Terms. Appendix B is a supplemental bibliography containing selected references intended to supply the user with additional material. Appendix C contains the table of contents for the other volume. Appendix D contains the index for the two-volume set.

TABLE OF CONTENTS

CHAPTER 1- FACILITY GROUND SYSTEM

Paragraph		Page
1.1	GENERAL	1-1
1.2	APPLICATION.	1-1
1.3	DEFINITIONS	1-1
1.4	REFERENCED DOCUMENTS.	1-1
1.5	DESCRIPTION.	1-2
1.5.1	Facility Ground System	1-2
1.5.2	Grounding and Power Distribution Systems	1-3
1.5.3	Electrical Noise in Communications Systems	1-4
1.6	BONDING, SHIELDING, AND GROUNDING RELATIONSHIP	1-5
1.7	GROUNDING SAFETY PRACTICES	1-5

CHAPTER 2- EARTHING AND EARTH ELECTRODE SUBSYSTEM

2.1	OBJECTIVES	2-1
2.1.1	Lightning Discharge	2-1
2.1.2	Fault Protection	2-2
2.1.3	Noise Reduction	2-2
2.1.4	Summary of Requirements	2-2
2.2	RESISTANCE REQUIREMENTS..	2-5
2.2.1	General.	2-5
2.2.2	Resistance to Earth	2-5
2.2.2.1	National Electrical Code Requirements	2-5
2.2.2.2	Department of Defense Communications Electronics Requirements	2-5
2.2.3	Lightning Require meats	2-5
2.3	SOIL RESISTIVITY	2-7
2.3.1	General	2-7
2.3.2	Typical Resistivity Ranges	2-7
2.3.3	Environmental Effects	2-7
2.4	MEASUREMENT OF SOIL RESISTIVITY	2-8
2.4.1	General	2-8
2.4.2	Measurement Techniques	2-8
2.4.2.1	One-Electrode Method	2-8
2.4.2.2	Four-Terminal Method	2-13
2.5	TYPES OF EARTH ELECTRODE SUBSYSTEMS	2-15
2.5.1	General	2-15
2.5.2	Ground Rods	2-15
2.5.3	Buried Horizontal Conductors.	2-15

TABLE OF CONTENTS (Continued)

Paragraph		Page
2.5.4	Grids	2-15
2.5.5	Plates	2-15
2.5.6	Metal Frameworks of Buildings	2-16
2.5.7	Water Pipes	2-16
2.5.8	Incidental Metals	2-16
2.5.9	Well Casings	2-16
2.6	RESISTANCE PROPERTIES	2-17
2.6.1	Simple Isolated Electrodes	2-17
2.6.1.1	Driven Rod	2-17
2.6.1.2	Other Commonly Used Electrodes	2-23
2.6.2	Resistance of Multiple Electrodes	2-23
2.6.2.1	Two Vertical Rods in Parallel	2-23
2.6.2.2	Square Array of Vertical Rods	2-27
2.6.2.3	Horizontal Grid (Mesh)	2-29
2.6.2.4	Vertical Rods Connected by a Grid	2-30
2.6.3	Transient Impedance of Electrodes	2-32
2.6.4	Effects of Nonhomogeneous (Layered) Earth	2-32
2.6.4.1	Hemispherical Electrode	2-32
2.6.4.2	Vertical Rod	2-33
2.6.4.3	Grids	2-33
2.7	MEASUREMENT OF RESISTANCE-TO-EARTH OF ELECTRODES	2-35
2.7.1	Introduction	2-35
2.7.2	Fall-of-Potential Method	2-35
2.7.2.1	Probe Spacing	2-36
2.7.2.2	Extensive Electrode Subsystems	2-42
2.7.2.3	Test Equipments	2-45
2.7.3	Three-Point (Triangulation) Method	2-46
2.8	OTHER CONSIDERATIONS	2-47
2.8.1	Surface Voltages Above Earth Electrodes	2-47
2.8.1.1	Step Voltage Safety Limit	2-47
2.8.1.2	Step Voltages for Practical Electrodes	2-49
2.8.1.2.1	Flush Vertical Rod	2-49
2.8.1.2.2	Buried Vertical Rod	2-53
2.8.1.2.3	Buried Horizontal Grid	2-55
2.8.1.3	Minimizing Step Voltage	2-56
2.8.2	Heating of Electrodes	2-57
2.8.2.1	Steady State Current	2-57
2.8.2.2	Transient Current	2-57
2.8.2.3	Minimum Electrode Size	2-59

TABLE OF CONTENTS (Continued)

Paragraph		Page
2.9	ELECTRODE ENHANCEMENT	2-59
2.9.1	Introduction	2-59
2.9.2	Water Retention	2-60
2.9.3	Chemical Salting	2-60
2.9.4	Electrode Encasement	2-62
2.9.5	Salting Methods.	2-63
2.10	CATHODIC PROTECTION	2-63
2.10.1	Introduction	2-63
2.10.2	Protection Techniques	2-65
2.10.3	Sacrifical Anodes.	2-65
2.10.4	Corrosive Atmospheres	2-66
2.11	GROUNDING IN ARCTIC REGIONS	2-66
2.11.1	Soil Resistivity	2-66
2.11.2	Improving Electrical Grounding in Frozen Soils	2-70
2.11.2.1	Electrode Resistance	2-71
2.11.2.2	Installation and Measurement Methods	2-7 1
2.11.2.2.1	Electrode Installation	2-71
2.11.2.2.2	Backfill	2-71
2.12	REFERENCES	2-75

CHAPTER 3- LIGHTNING PROTECTION SUBSYSTEM

3.1	THE PHENOMENON OF LIGHTNING	3-1
3.2	DEVELOPMENT OF A LIGHTNING FLASH	3-3
3.3	INFLUENCE OF STRUCTURE HEIGHT	3-3
3.4	STRIKE LIKELIHOOD	3-4
3.5	ATTRACTIVE AREA	3-10
3.5.1	Structures Less Than 100 Meters High.	3-10
3.5.2	Cone of Protection	3-11
3.6	LIGHTNING EFFECTS	3-13
3.6.1	Flash Parameters	3-13
3.6.2	Mechanical and Thermal Effects	3-15
3.6.3	Electrical Effects	3-17
3.6.3.1	Conductor Impedance Effects.	3-17
3.6.3.2	Induced Voltage Effects	3-18
3.6.3.3	Capacitively-Coupled Voltage	3-21
3.6.3.4	Earth Resistance	3-21
3.7	BASIC PROTECTION REQUIREMENTS	3-25
3.8	DETERMINING THE NEED FOR PROTECTION	3-26
3.8.1	Strike Likelihood	3-26

TABLE OF CONTENTS (Continued)

Paragraph		Page
3.8.2	Type of Construction	3-26
3.8.3	Criticalness to System Mission	3-27
3.9	APPLICABLE CODES	3-27
3.10	REFERENCES	3-28

CHAPTER 4 - FAULT PROTECTION SUBSYSTEM

4.1	FAULT PROTECTION	4-1
4.1.1	Power System Faults	4-1
4.1.2	Ground-Fault-Circuit-Interrupter (GFCl)	4-3
4.2	EARTH CONNECTION	4-3
4.3	AC POWER LINE GROUND	4-3
4.4	TEST EQUIPMENT	4-5
4.5	REFERENCES	4-6

CHAPTER 5- GROUNDING OF SIGNAL REFERENCE SUBSYSTEM

5.1	INTRODUCTION	5-1
5.2	CONDUCTOR CONSIDERATIONS.	5-1
5.2.1	Direct Current Resistance	5-1
5.2.2	Alternating Current Impedance	5-1
5.2.2.1	Skin Effect.	5-3
5.2.2.2	AC Resistance	5-5
5.2.2.3	Reactance	5-7
5.2.2.4	Proximity Effect	5-10
5.2.3	Resistance Properties vs Impedance Properties	5-10
5.2.4	Effects of Geometry	5-12
5.2.4.1	Stranded Cables	5-13
5.2.4.2	Rectangular Conductors	5-13
5.2.4.3	Tubular Conductors	5-13
5.2.4.4	Structural Steel Members	5-15
5.3	SIGNAL REFERENCE SUBSYSTEM NETWORK CONFIGURATIONS	5-15
5.3.1	Floating Ground	5-15
5.3.2	Single-Point Ground (for Lower Frequencies)	5-19
5.3.3	Multipoint Ground (for Higher Frequencies)	5-24
5.3.3.1	Equipotential Plane	5-26
5.3.3.2	Types of Equipotential Planes.	5-27
5.3.4	Floating System	5-28

TABLE OF CONTENTS (Continued)

Paragraph		Page
5.4	SITE APPLICATIONS	5-28
5.4.1	Lower Frequency Network	5-29
5.4.2	Higher Frequency Network	5-30
5.4.3	Frequency Limits	5-31
5.5	REFERENCES	5-32

CHAPTER 6- INTERFERENCE COUPLING AND REDUCTION

6.1	INTRODUCTION	6-1
6.2	COUPLING MECHANISMS	6-5
6.2.1	Conductive Coupling	6-5
6.2.2	Free-Space Coupling	6-6
6.2.2.1	Near-Field Coupling	6-6
6.2.2.2	Inductive Coupling	6-8
6.2.2.3	Capacitive Coupling	6-11
6.2.2.4	Far-Field Coupling	6-14
6.3	COMMON-MODE NOISE	6-17
6.3.1	Basic Theory of Common-Mode Coupling	6-19
6.3.2	Differential Amplifier	6-23
6.4	MINIMIZATION TECHNIQUES	6-23
6.4.1	Reduction of Coupling	6-23
6.4.1.1	Reference Plane Impedance Minimization	6-23
6.4.1.2	Spatial Separation	6-24
6.4.1.3	Reduction of Circuit Loop Area	6-24
6.4.1.4	Shielding	6-24
6.4.1.5	Balanced Lines	6-24
6.4.2	Alternate Methods	6-24
6.5	FACILITY AND EQUIPMENT REQUIREMENTS	6-25
6.6	REFERENCES	6-25

CHAPTER 7 - BONDING

7.1	DEFINITION OF BONDING	7-1
7.2	PURPOSES OF BONDING	7-1
7.3	RESISTANCE CRITERIA	7-3
7.4	DIRECT BONDS	7-4
7.4.1	Contact Resistance	7-6
7.4.1.1	Surface Contaminants	7-7
7.4.1.2	Surface Hardness	7-7
7.4.1.3	Contact Pressure	7-7

TABLE OF CONTENTS (Continued)

Paragraph		Page
7.4.1.4	Bond Area	7-8
7.4.2	Direct Bonding Techniques	7-10
7.4.2.1	Welding	7-10
7.4.2.2	Brazing	7-11
7.4.2.3	Soft Solder.	7-14
7.4.2.4	Bolts	7-14
7.4.2.5	Rivets	7-15
7.4.2.6	Conductive Adhesive	7-16
7.4.2.7	Comparison of Techniques	7-16
7.5	INDIRECT BONDS	7-16
7.5.1	Resistance	7-19
7.5.2	Frequency Effects	7-19
7.5.2.1	Skin Effect	7-19
7.5.2.2	Bond Reactance	7-19
7.5.2.3	Stray Capacitance	7-23
7.6	SURFACE PREPARATION	7-25
7.6.1	Solid Materials	7-26
7.6.2	Organic Compounds	7-26
7.6.3	Platings and Inorganic Finishes	7-29
7.6.4	Corrosion By-Products	7-29
7.7	COMPLETION OF THE BOND	7-29
7.8	BOND CORROSION	7-30
7.8.1	Chemical Basis of Corrosion	7-30
7.8.1.1	Electrochemical Series	7-31
7.8.1.2	Galvanic Series	7-31
7.8.2	Relative Area of Anodic Member	7-34
7.8.3	Protective Coatings	7-34
7.9	WORKMANSHIP	7-34
7.10	SUMMARY OF GUIDELINES	7-36
7.11	REFERENCES	7-37

CHAPTER 8- SHIELDING

8.1	FUNCTION OF AN ELECTROMAGNETIC SHIELD.	8-1
8.2	BASIC SHIELDING THEORY	8-2
8.2.1	Oppositely Induced Fields	8-2
8.2.2	Transmission Line Analogy	8-2
8.2.3	Nonuniform Shielding	8-4

TABLE OF CONTENTS (Continued)

Paragraph		Page
8.3	SHIELDING EFFECTIVENESS OF CONTINUOUS SINGLE-THICKNESS SHIELDS	8-4
8.3.1	Absorption Loss	8-5
8.3.2	Reflection Loss	8-6
8.3.2.1	Low Impedance Field	8-10
8.3.2.2	Plane Wave Field	8-13
8.3.2.3	High Impedance Field	8-15
8.3.3	Re-Reflection Correction Factor	8-19
8.3.4	Total Shielding Effectiveness.	8-19
8.3.4.1	Measured Data	8-27
8.3.4.2	Summary	8-27
8.4	SHIELDING EFFECTIVENESS OF OTHER SHIELDS	8-31
8.4.1	Multiple Solid Shields	8-31
8.4.2	Coatings and Thin-Film Shields.	8-32
8.4.3	Screens and Perforated Metal Shields	8-33
8.5	SHIELD DISCONTINUITY EFFECTS (APERTURES)	8-41
8.5.1	Seams Without Gaskets	8-42
8.5.2	Seams With Gaskets	8-45
8.5.3	Penetration Holes	8-45
8.5.3.1	Waveguide-Below-Cutoff	8-50
8.5.3.2	Screen and Conducting Glass	8-52
8.6	SELECTION OF SHIELDING MATERIALS	8-53
8.7	USE OF CONVENTIONAL BUILDING MATERIALS	8-56
8.7.1	Concrete	8-56
8.7.2	Reinforcing Steel (Rebar)	8-56
8.8	CABLE AN D CONNECTOR SHIELDING	8-59
8.8.1	Cable Shields	8-59
8.8.2	Terminations and Connectors.	8-63
8.9	SHIELDED ENCLOSURES (SCREEN ROOMS)	8-63
8.9.1	Remountable (Modular) Enclosures	8-66
8.9.2	Custom Built Rooms	8-70
8.9.3	Foil Room Liners	8-71
8.10	TESTING OF SHIELDS	8-72
8.10.1	Low Impedance Magnetic Field Testing Using Small Loops	8-73
8.10.2	Additional Test Methods	8-74
8.11	PERSONNEL PROTECTION SHIELDS	8-74
8.12	DETERMINATION OF SHIELDING REQUIREMENTS	8-74
8.12.1	Equipment Disturbances	8-76
8.12.2	Electromagnetic Environmental Survey	8-76
8.12.3	Equipment EMI Properties	8-77

TABLE OF CONTENTS (Continued)

Paragraph		Page
8.13	SYSTEM DESIGN CONSIDERATIONS	8-77
8.13.1	Size	8-78
8.13.2	Layout	8-78
8.13.3	Signal Properties.	8-78
8.13.4	Cost	8-78
8.14	REFERENCES.	8-79

CHAPTER 9-PERSONNEL PROTECTION

9.1	ELECTRIC SHOCK	9-1
9.1.1	Levels of Electric Shock	9-1
9.1.2	Shock Prevention.	9-3
9.2	STATIC ELECTRICITY	9-3
9.3	RADIO FREQUENCY (RF) RADIATION HAZARDS	9-5
9.4	LASER HAZARDS	9-5
9.5	X-RAY RADIATION	9-6
9.6	REFERENCES	9-6

CHAPTER 10- NUCLEAR EMP EFFECTS

10.1	INTRODUCTION	10-1
10.2	EMP GENERATION	10-1
10.2.1	High-Altitude EMP (HEMP).	10-1
10.2.1.1	Early-Time HEMP.	10-1
10.2.1.2	Late-Time HEMP (MHDEMP)	10-3
10.2.1.3	Intermediate-Time HEMP	10-3
10.2.2	Surface-Burst EMP	10-3
10.2.3	0ther EMP Phenomena	10-4
10.2.4	Comparison With Lightning.	10-5
10.3	HEMP INTERACTION WITH SYSTEMS	10-5
10.3.1	Current in Long Lines.	10-6
10.3.1.1	Long Overhead Lines	10-6
10.3.1.2	Long Buried Lines.	10-7
10.3.1.3	Vertical Structures	10-9
10.3.2	HEMP Interaction With Local Structure	10-9
10.3.2.1	Shields	10-9
10.3.2.2	Penetrating Conductors	10-10
10.3.2.3	Apertures	10-11

TABLE OF CONTENTS (Continued)

Paragraph		Page
10.4	PROTECTION AGAINST HEMP	10-13
10.4.1	HEMP Barrier	10-13
10.4.1.1	Shield.	10-13
10.4.1.2	Penetrating Conductors	10-13
10.4.1.3	Apertures.	10-15
10.4.2	Allocation of Protection	10-15
10.4.2.1	Amount of Protection Needed	10-15
10.4.2.2	Where Protection is Applied	10-17
10.4.2.3	Terminal Protection Devices	10-17
10.4.2.3.1	Spark Gaps and Gas Tubes	10-17
10.4.2.3.2	Metal-Oxide Varistors	10-18
10.4.2.3.3	Semiconductors	10-18
10.4.2.3.4	Filters	10-18
10.4.2.4	Waveguide Penetration of Facility Shield	10-19
10.4.2.4.1	Introduction	10-19
10.4.2.4.2	In-Line Waveguide Attachment	10-21
10.4.2.4.2.1	Sleeve and Bellows Attachment	10-21
10.4.2.4.2.2	Braided Wire Sleeve	10-23
10.4.2.4.2.3	Stuffing Tube for Waveguide	10-24
10.5	REFERENCES	10-25

CHAPTER 11-NOTES

11.1	SUBJECT TERM (KEY WORD) LISTING	11-1

APPENDICES

A	GLOSSARY	A-1
B	SUPPLEMENTAL BIBLIOGRAPHY	B-1
BI	SUBJECT CROSS REFERENCE	B-1
BII	LISTINGS	B-2
C	TABLE OF CONTENTS FOR VOLUME II	C-1
D	INDEX	D-1

LIST OF FIGURES

Figure		Page
2-1	Voltage Differentials Arising from Unequal Earth Electrode Resistances and Unequal Stray Currents	2-3
2-2	Voltage Differentials Between Structures Resulting from Stray Ground Currents.	2-4
2-3	Typical Variations in Soil Resistivity as a Function of Moisture, Temperature, and Salt Content	2-9
2-4	Current Flow From a Hemisphere in Uniform Earth	2-11
2-5	Idealized Method for Determining Soil Resistivity	2-14
2-6	Effect of Rod Length Upon Resistance	2-18
2-7	Effect of Rod Diameter Upon Resistance.	2-18
2-8	Earth Resistance to Shell Surrounding a Vertical Earth Electrode	2-20
2-9	Resistance of Buried Horizontal Conductors	2-24
2-10	Resistance of Buried Circular Plates.	2-25
2-11	Ground Rods in Parallel..	2-26
2-12	Ratio of the Actual Resistance of a Rod Array to the Ideal Resistance of N Rods in Parallel	2-28
2-13	Transient Impedance of an Earth Electrode Subsystem as a Function of the Number of Radial Wires	2-31
2-14	Current Distribution in Nonuniform Soil	2-34
2-15	Fall-of-Potential Method for Measuring the Resistance of Earth Electrodes	2-37
2-16	Effect of Electrode Spacing on Voltage Measurement	2-38
2-17	Resistance Variations as Function of Potential Probe Position in Fall-of-Potential Method	2-41
2-18	Earth Resistance Curves for a Large Electrode Subsystem	2-44
2-19	Earth Resistance Curve Applicable to Large Earth Electrode Subsystems	2-45
2-20	Intersection Curves for Figure 2-18	2-47
2-21	Triangulation Method of Treasuring the Resistance of an Earth Electrode	2-48
2-22	Variation of Surface Potential Produced by a Current Flowing Into an Isolated Ground Rod	2-52
2-23	Surface Potential Variation Along a Grid	2-54
2-24	Effect of Chemical Treatment on Resistance of Ground Rods	2-61
2-25	Seasonal Resistance Variations of Treated and Untreated Ground Rods	2-61
2-26	Trench Method of Soil Treatment	2-64
2-27	Alternate Method of Chemical Treatment of Ground Rod	2-64
2-28	Relative Depths of Unconsolidated Materials, Subarctic Alaska	2-67
2-29	Typical Sections Through Ground Containing Permafrost	2-68
2-30	Illustration Showing Approximate Variations in Substructure	2-69
2-31	Installation of an Electrode During the Process of Backfilling	2-72
2-32	Apparent Resistivity for Two Soils at Various Moisture and Soil Contents	2-73
2-33	Configuration of Nearly Horizontal Electrodes Placed in the Thawed Active Layer	2-73

LIST OF FIGURES (Continued)

Figure		Page
2-34	Resistance-to-Ground Curves for an Electrode Driven Into Ice-Rich Silt	2-73
2-35	Resistance-to-Ground Curves for an Electrode Surrounded by Backfill of Saturated Silt	2-74
2-36	Resistance-to-Ground Curves for an Electrode Surrounded by Water Saturated Salt-Soil Backfill	2-74
2-37	Resistance-to-Ground Curves for an Electrode Surrounded by Water Saturated Salt-Soil Backfill	2-74
2-38	Resistance-to-Ground Curves for Electrodes Placed in Holes Modified by Spring Changes	2-74
3-1	Charge Distribution in a Thundercloud	3-2
3-2	Mean Number of Thunderstorm Days Per Year for the United States	3-5
3-3	Worldwide Isokeraunic Map...	3-6
3-4	Attractive Area of a Rectangular Structure	3-12
3-5	Effective Height of a Structure.	3-12
3-6	Zones of Protection Established by a Vertical Mast and a Horizontal Wire.	3-14
3-7	Some Commonly Used Lightning Shielding Angles	3-14
3-8	Illustration of Processes and Currents Which Occur During a Lightning Flash to Ground	3-15
3-9	Inductive Coupling of Lightning Energy to Nearby Circuits	3-19
3-10	Normalized Voltage Induced in a Single-Turn Loop by Lightning Currents	3-20
3-11	Capacitive Coupling of Lightning Energy	3-22
3-12	Coupling of Lightning Energy Through an Interconnected Facility	3-23
3-13	Step-Voltage Hazards Caused by Lightning-Induced Voltage Gradients in the Earth.	3-24
4-1	Grounding for Fault Protection	4-2
4-2	Single-Phase 115/230 Volt AC Power Ground Connections	4-4
4-3	Three-Phase 120/208 Volt AC Power System Ground Connections	4-5
4-4	Connections for a Three-Phase "Zig-Zag" Grounding Transformer	4-6
5-1	Surface Resistance and Skin Depth for Common Metals	5-4
5-2	Resistance Ratio of Isolated Round Wires	5-6
5-3	Nomograph for the Determination of Skin Effect Correction Factor	5-8
5-4	Low Frequency Self Inductance Versus Length for 1/0 AWG Straight Copper ‘Wire	5-9
5-5	Self Inductance of Straight Round Wire at High Frequencies	5-9
5-6	Resistance Ratio of Rectangular Conductors	5-14
5-7	Resistance Versus Length for Various Sizes of Copper Tubing	5-14
5-8	AC Resistance Versus Frequency for Copper Tubing	5-16
5-9	Resistance Ratio of Nonmagnetic Tubular Conductors	5-17
5-1o	Inductance Versus Frequency for Various Sizes of Copper Tubing	5-18
5-11	Floating Signal Ground	5-19

LIST OF FIGURES (Continued)

Figure		Page
1-72	Bonding of Equipment Cabinets to Cable Tray.	1-148
1-73	Bonding to Flexible Cable and Conduit	1-149
1-74	Bonding to Rigid Conduit	1-149
1-75	Connection of Bonding Jumpers to Flat Surface	1-150
1-76	Bolted Bond Between Flatcars.	1-151
1-77	Bracket Installation (Rivet or Weld)	1-151
1-78	Use of Bonding Straps for Structural Steel Interconnections.	1-152
1-79	Direct Bonding of Structural Elements	1-153
1-80	Connection of Earth Electrode Riser to Structural Column	1-153
1-81	Measured Electromagnetic Shielding Effectiveness of a Typical Building at 6 Feet Inside Outer Wall	1-155
1-82	Measured Electromagnetic Shielding Effectiveness of a Typical Building at 45 Feet Inside Outer Wall	1-155
1-83	Shielding Effectiveness of Rebars	1-156
1-84	Shielding Effectiveness of a Grid as a Function of Wire Diameter, Wire Spacing, and Wavelength	1-158
1-85	Shield Absorption Loss Nomograph	1-161
1-86	Nomograph for Determining Magnetic Field Reflection Loss	1-165
1-87	Nomograph for Determining Electric Field Reflection Loss	1-166
1-88	Nomograph for Determining Plane Wave Reflection Loss	1-167
1-89	Shielding Effectiveness of Aluminum Foil Shielded Room	1-168
1-90	Shielding Effectiveness of Copper Foil Shielded Room	1-168
1-91	Formation of Permanent Overlap Seam	1-169
1-92	Good Corner Seam Design...	1-169
1-93	Pressure Drop Through Various Materials Used to Shield Ventilation Openings	1-170
1-94	Typical Single-Point Entry for Exterior Penetrations (Top View).	1-174
1-95	Entry Plate Showing Rigid Cable, Conduit, and Pipe Penetrations	1-175
1-96	Effect of Rod Length on Ground Resistance	1-180
1-97	Grounding of 120/208V 3-Phase, 4-Wire Wye Power Distribution System	1-181
1-98	Grounding of Single-Phase, 3-Wire 110/220V Power System	1-183
1-99	Grounding of 28 VDC 2-Wire DC Power System	1-184
1-100	Connecting Ground Subsystems for Collocated Shelters Greater than 20 Feet Apart	1-189
1-101	Method of Grounding a Fence.	1-192
2-1	Transmitter Building	2-2
2-2	Communication Center/Receiver Building Expansion.	2-3
2-3	Earth Resistance Measurement at a Typical Facility	2-7
2-4	Resistance Measurement Worksheet	2-8
2-5	Sample of a Completed Resistance Measurement Work Sheet	2-9

LIST OF FIGURES (Continued)

Figure		Page
7-14	True Equivalent Circuit of a Bonded System	7-24
7-15	Measured Bonding Effectiveness of a 9-1/2 Inch Bonding Strap	7-27
7-16	Measured Bonding Effectiveness of 2-3/8 Inch Bonding Strap	7-28
7-17	Basic Diagram of the Corrosion Process	7-30
7-18	Anode-to-Cathode Size at Dissimilar Junctions	7-35
7-19	Techniques for Protecting Bonds Between Dissimilar Metals	7-35
8-1	Electromagnetic Transmission Through a Slot	8-3
8-2	Transmission Line Model of Shielding	8-4
8-3	Absorption Loss for One Millimeter Shields	8-9
8-4	Wave Impedance Versus Distance from Source	8-10
8-5	Reflection Loss for Iron, Copper, and Aluminum With a Low Impedance Source	8-12
8-6	Universal Reflection Loss Curve for a Low Impedance Source	8-13
8-7	Plane Wave Reflection Loss for Iron, Copper, and Aluminum ($r>2\lambda$)	8-14
8-8	Universal Reflection Loss Curve for Plane Waves	8-15
8-9	Universal Reflection Loss Curve for High Impedance Field	8-16
8-10	Reflection Losses for Iron, Copper, and Aluminum With a High Impedance Source	8-17
8-11	Graph of Correction Term (C) for Copper in a Magnetic Field	8-22
8-12	Absorption Loss and Multiple Reflection Correction Term When r = 1	8-22
8-13	Theoretical Attenuation of Thin Copper Foil	8-26
8-14	Theoretical Attenuation of Thin Iron Sheet	8-26
8-15	Measured Shielding Effectiveness of High Permeability Metals	8-29
8-16	Measured Shielding Effectiveness of High Permeability Material as a Function of Measurement Loop Spacing	8-29
8-17	Measured Shielding Effectiveness of Two Sheets of High Permeability Metal	8-32
8-18	Measured and Calculated Shielding Effectiveness of Copper Screens to Low Impedance Fields	8-37
8-19	Shielding Effectiveness of a Perforated Metal Sheet as a Function of Hole Size	8-40
8-20	Shielding Effectiveness of a Perforated Metal Sheet as a Function of Hole Spacing.	8-40
8-21	Slot Radiation (Leakage)	8-43
8-22	Shielding Effectiveness Degradation Caused by Surface Finishes on Aluminum	8-44
8-23	Influence of Screw Spacing on Shielding Effectiveness	8-46
8-24	Shielding Effectiveness of AMPB-65 Overlap as a Function of Screw Spacing Along Two Rows, l.5 Inches Apart	8-46
8-25	Shielding Effectiveness of an AMPB-65 Joint as a Function of Overlap	8-47
8-26	Typical Mounting Techniques for RF Gaskets	8-49
8-27	Enlarged View of Knitted Wire Mesh	8-50
8-28	Shielding Effectiveness of Conductive Glass to High Impedance Waves	8-54
8-29	Shielding Effectiveness of Conductive Glass to Plane Waves	8-55

LIST OF FIGURES (Continued)

Figure		Page
8-30	Light Transmission Versus Surface Resistance for Conductive Glass	8-55
8-31	Shielding Effectiveness of Some Building Materials	8-57
8-32	Center Area Attenuation of Induced Voltage by 15 Foot High Single-Course Reinforcing Steel Room...	8-58
8-33	Surface Transfer Impedance..	8-62
8-34	Shielding Effectiveness of Various Types of RF Cables as a Function of Frequency	8-62
8-35	Connector for Shield Within a Shield	8-65
8-36	RF-Shielded Connector	8-65
8-37	Effectiveness of Circumferential Spring Fingers for Improving the Shielding of a Connector	8-66
8-38	Use of Finger Stock for Door Bonding	8-69
8-39	Coaxial Loop Arrangement for Measuring Shield Effectiveness	8-75
8-40	Coplanar Loop Arrangement for Measuring Shield Effectiveness	8-75
10-1	EMP From High Altitude Bursts	10-2
10-2	Schematic Representation of High-Altitude EMP Generation	10-2
10-3	Surface-Burst Geometry Showing Compton Electrons and Net Current Density, J^c_{net}	10-4
10-4	Short-Circuit Current Induced at the End of a Semi-Infinite Above-Ground Wire By an Expodential Pulse	10-7
10-5	The Normalized Current Waveform for Various Valves of the Depth Parameter p (Expodential Pulse)	10-8
10-6	Short Circuit Current Induced at the Base of a Vertical Riser by a Vertically Polarized Incident Wave	10-9
10-7	Shield to Exclude Electromagnetic Fields	10-11
10-8	Electromagnetic Penetration Through Small Apertures	10-12
10-9	Shielding Integrity Near Interference - Carrying External Conductors	1o-1-1
10-10	Magnetic Field Penetration of Apertures	10-16
10-11	Exclusion of Waveguide Current From Interior of Facility	10-19
10-12	Waveguide Feedthroughs	10-20
10-13	Bellows With Slitted Sleeve Waveguide Attachment	10-22
10-14	Braided Wire Sleeve Clamped to Waveguide	10-23
10-15	Stuffing Tube for Waveguide	10-24

LIST OF TABLES

Table		Page
2-1	Facility Ground System: Purposes, Requirements, and Design Factors	2-6
2-2	Approximate Soil Resistivity	2-9
2-3	Resistivity Values of Earthing Medium	2-10
2-4	Resistance Distribution for Vertical Electrodes	2-21
2-5	Simple Isolated Electrodes.	2-22
2-6	Resistance Accuracy Versus Probe C_2 Spacing	2-43
2-7	Step Voltages for a Buried Vertical Ground Rod	2-50
2-8	Methods of Reducing Step Voltage Hazards	2-56
2-9	Effect of Moisture Content on Earth Resistivity	2-66
2-10	Effect of Temperature on Earth Resistivity	2-66
3-1	Range of Values for Lightning Parameters	3-16
5-1	Properties of Annealed Copper Wire	5-2
5-2	Parameters of Conductor Materials	5-3
5-3	DC Parameters of Some Standard Cables.	5-11
5-4	Sixty-Hertz Characteristics of Standard Cables	5-11
5-5	One-Megahertz Characteristics of Standard Cables	5-12
5-6	Impedance Comparisons Between #12 AWG and 1/0 AWG	5-12
7-1	DC Resistance of Direct Bonds Between Selected Metals	7-8
7-2	Ratings of Selected Bonding Techniques	7-18
7-3	Calculated Inductance of a 6 Inch (15.2 cm) Rectangular Strap	7-20
7-4	Calculated Inductance (µH) of 0.05 Inch (1.27 mm) Thick Straps	7-20
7-5	Calculated Inductance (µH) of Standard Size Cable	7-21
7-6	Standard Electromotive Series	7-32
7-7	Galvanic Series of Common Metals and Alloys in Seawater	7-33
8-1	Electrical Properties of Shielding Materials at 150 kHz	8-7
8-2	Absorption Loss, A, of 1 mm Metal Sheet	8-8
8-3	Coefficients for Magnetic Field Reflection Loss	8-11
8-4	Calculated Reflection Loss in dB of Metal Sheet, Both Faces	8-18
8-5	Coefficients for Evaluation of Re-Reflection Correction Term, C	8-20
8-6	Correction Term C in dB for Single Metal Sheet	8-21
8-7	Calculated Values of Shielding Effectiveness	8-23
8-8	Measured Shielding Effectiveness in dB for Solid-Sheet Materials	8-28
8-9	Summary of Formulas for Shielding Effectiveness	8-30
8-10	Magnetic Material Characteristics	8-31

LIST OF TABLES (Continued)

Table		Page
8-11	Calculated Values of Copper Thin-Film Shielding Effectiveness in dB Against Plane-Wave Energy	8-33
8-12	Effectiveness of Non-Solid Materials Against Low Impedance and Plane-Waves	8-38
8-13	Effectiveness of Non-Solid Shielding Materials Against High Impedance Waves	8-39
8-14	Comparison of Measured and Calculated Values of Shielding Effectiveness for No. 22, 15 mil Copper Screens	8-41
8-15	Characteristics of Conductive Gasketing Materials	8-48
8-16	Shielding Effectiveness of Hexagonal Honeycomb Made of Steel With 1/8-Inch Openings l/2-Inch Long....	8-51
8-17	Comparison of Cable Shields	8-60
8-18	Connector Application Summary	8-64
8-19	Characteristics of Commercially Available Shielded Enclosures	8-67
9-1	Summary of the Effects of Shock	9-2
10-1	Shielding by Diffusion	10-10

METRIC CONVERSION FACTORS

Approximate Conversions to Metric Measures

Symbol	When You Know	Multiply by	To Find	Symbol
		LENGTH		
in	inches	2.5	centimeters	cm
ft	feet	30	centimeters	cm
yd	yards	0.9	meters	m
mi	miles	1.6	kilometers	km
		AREA		
in^2	square inches	6.5	square centimeters	cm^2
ft^2	square feet	0.09	square meters	m^2
yd^2	square yards	0.8	square meters	m^2
mi^2	square miles	2.6	square kilometers	km^2
	acres	0.4	hectares	ha
		MASS (weight)		
oz	ounces	28	grams	g
lb	pounds	0.45	kilograms	kg
	short tons (2000 lb)	0.9	tonnes	t
		VOLUME		
tsp	teaspoons	5	milliliters	ml
Tbsp	tablespoons	15	milliliters	ml
fl oz	fluid ounces	30	milliliters	ml
c	cups	0.24	liters	l
pt	pints	0.47	liters	l
qt	quarts	0.95	liters	l
gal	gallons	3.8	liters	l
ft^3	cubic feet	0.03	cubic meters	m^3
yd^3	cubic yards	0.76	cubic meters	m^3
		TEMPERATURE (exact)		
°F	Fahrenheit temperature	5/9 (after subtracting 32)	Celsius temperature	°C

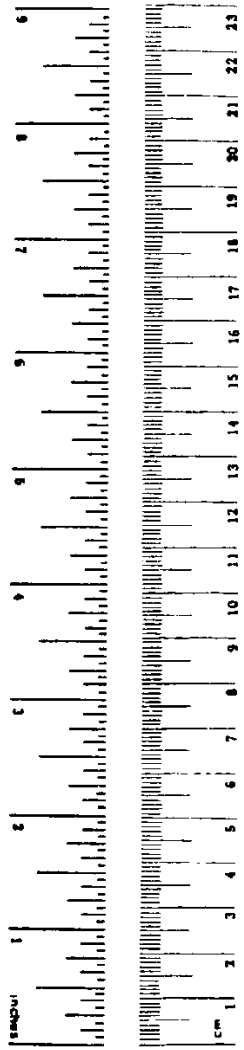

Approximate Conversions from Metric Measures

Symbol	When You Know	Multiply by	To Find	Symbol
		LENGTH		
mm	millimeters	0.04	inches	in
cm	centimeters	0.4	inches	in
m	meters	3.3	feet	ft
m	meters	1.1	yards	yd
km	kilometers	0.6	miles	mi
		AREA		
cm^2	square centimeters	0.16	square inches	in^2
m^2	square meters	1.2	square yards	yd^2
km^2	square kilometers	0.4	square miles	mi^2
ha	hectares (10,000 m^2)	2.5	acres	
		MASS (weight)		
g	grams	0.035	ounces	oz
kg	kilograms	2.2	pounds	lb
t	tonnes (1000 kg)	1.1	short tons	
		VOLUME		
ml	milliliters	0.03	fluid ounces	fl oz
l	liters	2.1	pints	pt
l	liters	1.06	quarts	qt
l	liters	0.26	gallons	gal
m^3	cubic meters	35	cubic feet	ft^3
m^3	cubic meters	1.3	cubic yards	yd^3
		TEMPERATURE (exact)		
°C	Celsius temperature	9/5 (then add 32)	Fahrenheit temperature	°F

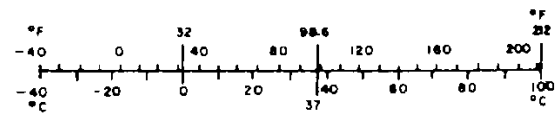

CHAPTER 1

FACILITY GROUND SYSTEM

1.1 GENERAL.

1.1.1 This handbook addresses the practical considerations for engineering of grounding systems, subsystems, and other components of ground networks. Electrical noise reduction is discussed as it relates to the proper installation of ground systems. Power distribution systems are covered to the degree necessary to understand the interrelationships between grounding, power distribution, and electrical noise reduction.

1.1.2 The information provided in this handbook primarily concerns grounding, bonding, and shielding of fixed plant telecommunications-electronics facilities; however, it also provides basic guidance in the grounding of deployed transportable communications/electronics equipment.

1.1.3 Grounding, bonding, and shielding are approached from a total system concept, which comprises four basic subsystems in accordance with current Department of Defense (DOD) guidance. These subsystems are as follows:

a. An earth electrode subsystem.

b. A lightning protection subsystem.

c. A fault protection subsystem.

d. A signal reference subsystem.

1.2 APPLICATION. This handbook provides technical information for the engineering and installation of military communications systems related to the background and practical aspects of installation practices applicable to grounding, bonding, and shielding. It also provides the latest concepts on communications systems grounding, bonding, and shielding installation practices as a reference for military communications installation personnel.

1.3 DEFINITIONS. A glossary of unique terms used in this handbook is provided in Appendix A. All other terms and definitions used in this handbook conform to those contained in Joint Chiefs of Staff Publication No. 1. (JCS Pub 1), FED-STD-1037, MIL-STD-463, and the Institute of Electrical and Electronics Engineers (IEEE) dictionary.

1.4 REFERENCED DOCUMENTS. Publications related to the subject material covered in the text of this handbook are listed in Appendix B. The list includes publications referenced in the text and those documents that generally pertain to subjects contained in the handbook but are not necessarily addressed specifically.

1.5 DESCRIPTION. The ground system serves three primary functions which are listed below. A good ground system must receive periodic inspection and maintenance to retain its effectiveness. Continued or periodic maintenance is aided through adequate design, choice of materials, and proper installation techniques to ensure that ground Subsystems resist deterioration or inadvertent destruction and thus require minimal repair to retain their effectiveness throughout the life of the facility.

a. Personnel safety. Personnel safety is provided by low-impedance grounding and bonding between equipment, metallic objects, piping, and other conductive objects, so that currents due to faults or lightning do not result in voltages sufficient to cause a shock hazard.

b. Equipment and facility protection. Equipment and facility protection is provided by low-impedance grounding and bonding between electrical services, protective devices, equipment, and other conductive objects, so that faults or lightning currents do not result in hazardous voltages within the facility. Also, the proper operation of overcurrent protective devices is frequently dependent upon low-impedance fault current paths.

c. Electrical noise reduction. Electrical noise reduction is accomplished on communication circuits by ensuring that (1) minimum voltage potentials exist between communications-electronics equipments, (2) the impedance between signal ground points throughout the facility to earth is minimal, and (3) that interference from noise sources is minimized.

1.5.1 Facility Ground System. All telecommunications and electronic facilities are inherently related to earth by capacitive coupling, accidental contact, and intentional connection. Therefore, ground must be looked at from a total system viewpoint, with various subsystems comprising the total facility ground system. The facility ground system forms a direct path of known low impedance between earth and the various power, communications, and other equipments that effectively extends in approximation of ground reference throughout the facility. The facility ground system is composed of an earth electrode subsystem, lightning protection subsystem, fault protection subsystem, and signal reference subsystem.

a. Earth electrode subsystem. The earth electrode subsystem consists of a network of earth electrode rods, plates, mats, or grids and their interconnecting conductors. The extensions into the building are used as the principal ground point for connection to equipment ground subsystems serving the facility. Ground reference is established by electrodes in the earth at the site or installation. The earth electrode subsystem includes the following: (1) a system of buried, driven rods interconnected with bare wire that normally form, a ring around the building; or (2) metallic pipe systems, i.e., water, gas, fuel, etc., that have no insulation joints; or (3) a ground plane of horizontal buried wires. Metallic pipe systems shall not be used as the sole earth electrode subsystem. Resistance to ground should be obtained from the appropriate authority if available or determined by testing. For EMP considerations, see Chapter 10.

b. Lightning protection subsystem. The lightning protection subsystem provides a nondestructive path to ground for lightning energy contacting or induced in facility structures. To effectively protect a building, mast, tower, or similar self-supporting objects from lightning damage, an air terminal (lightning rod) of adequate mechanical strength and electrical conductivity to withstand the stroke impingement must he provided. An air terminal will intercept the discharge to keep it from penetrating the nonconductive outer coverings of the structure, and prevent it from passing through devices likely to be damaged or destroyed. A

low-impedance path from the air terminal to earth must also be provided. These requirements are met by either (1) an integral system of air terminals, roof conductors, and down conductors securely interconnected to provide the shortest practicable path to earth; or (2) a separately mounted shielding system, such as a metal mast or wires (which act as air terminals) and down conductors to the earth electrode subsystem.

c. Fault protection subsystem. The fault protection subsystem ensures that personnel are protected from shock hazard and equipment is protected from damage or destruction resulting from faults that may develop in the electrical system. It includes deliberately engineered grounding conductors (green wires) which are provided throughout the power distribution system to afford electrical paths of sufficient capacity, so that protective devices such as fuses and circuit breakers installed in the phase or hot leads can operate promptly. If at all possible the equipment fault protection conductors should be physically separate from signal reference grounds except at the earth electrode subsystem. The equipment fault protection subsystem provides grounding of conduits for signal conductors and all other structural metallic elements as well as the cabinets or racks of equipment.

d. Signal reference subsystem. The signal reference subsystem establishes a common reference for C-E equipments, thereby also minimizing voltage differences between equipments. This in turn reduces the current flow between equipments and also minimizes or eliminates noise voltages on signal paths or circuits. Within a piece of equipment, the signal reference subsystem may be a bus bar or conductor that serves as a reference for some or all of the signal circuits in the equipment. Between equipments, the signal reference subsystem will be a network consisting of a number of interconnected conductors. Whether serving a collection of circuits within an equipment or serving several equipments within a facility, the signal reference network will in the vast majority of cases be a multiple point/ equipotential plane but could also, in some cases, be a single point depending on the equipment design, the facility, and the frequencies involved.

1.5.2 Grounding and Power Distribution Systems. For safety reasons, both the MIL-STD-188-124A and the National Electrical Code (NEC) require the electrical power systems and equipments be intentionally grounded; therefore, the facility ground system is directly affected by the proper installation and maintenance of the power distribution systems. The intentional grounding of electrical power systems minimizes the magnitude and duration of overvoltage on an electrical circuit, thereby reducing the probability of personnel injury, insulation failure, or fire and consequent system, equipment, or building damage.

a. Alternating currents in the facility ground system are primarily caused as a result of improper ac wiring, simple mistakes in the ac power distribution system installation, or as a result of power faults. To provide the desired safety to personnel and reduce equipment damage, all 3-phase wye wiring to either fixed or transportable communication facilities shall be accomplished by the 5-wire or conductor distribution system consisting of three phase or “hot” leads, one neutral lead and one grounding (green) conductor. A single building receiving power from a single source requires the ac neutral be grounded to the earth electrode subsystem on the source side of the first service disconnect or service entrance panel as well to a ground terminal at the power source (transformer, generator, etc.). This neutral shall not be grounded at any point within the building or on the load side of the service entrance panel. The grounding of all C-E equipment within the building is accomplished via the grounding (green) conductor which is bonded to the neutral bus in the source side of the service entrance panel and, in turn, grounded to the earth electrode subsystem. In addition to the three phase or "hot" leads and the neutral (grounded) conductor, a fifth wire is employed to interconnect the facility earth electrode subsystem with the ground terminal at the power source.

To eliminate or reduce undesired noise or hum, multiple facilities supplied from a single source shall ground the neutral only at the power source and not to the earth electrode subsystem at the service entrance point. Care should be taken to ensure the neutral is not grounded on the load side of the first disconnect service or at any point within the building. The grounding (green) conductor in this case is not bonded to the neutral bus in the service disconnect panel. It is, however, bonded to the facility earth electrode subsystem at the service entrance panel. The fifth wire shall be employed to interconnect the earth electrode subsystem with the ground terminal at the power source.

The secondary power distribution wiring for a 240 volt single phase system consists of two phase or “hot” leads, a neutral (grounded) and a grounding (green) conductor while the three conductor secondary power distribution system is comprised of one phase, one neutral, and one grounding lead. In both cases, the neutral shall not be grounded on the load side of the first service disconnect. It shall, however, be grounded to the ground terminal at the power source and to the earth electrode subsystem if one power source supplies power only to a single building.

The ac wiring sequence (phase, neutral, and equipment fault protection) must be correct all the way from the main incoming ac power source to the last ac load, with no reversals between leads and no interconnection between neutral and ground leads. Multiple ac neutral grounds and reversals between the ac neutral and the fault protection subsystem will generally result in ac currents in all ground conductors to varying degrees. The NEC recognizes and allows the removal or relocation of grounds on the green wire which cause circulating currents. (Paragraph 250-21(b) of the NEC refers.) Alternating current line filters also cause seine ac currents in the ground system when distributed in various areas of the facility, this is due to some ac current passing through capacitors in the ac line filters when the lines are filtered to ground. Power line filters should not induce more than 30 milliamperes of current to the fault protection subsystem.

b. Dc power equipment has been found to be a significant electrical noise source that can be minimized through proper configuration of the facility, the physical and electrical isolation of the dc power equipment from communications equipment, and filtering of the output. Certain communications equipment with inverter or switching type power supplies also cause electrical noise on the dc supply leads and the ac input power leads. This noise can be minimized by the use of decentralizing filters at or in the equipment. The location, number, and termination of the dc reference ground leads are also important elements in providing adequate protection for dc systems and, at the same time, minimizing electrical noise and dc currents in the ground system.

1.5.3 Electrical Noise in Communications Systems. Interference-causing signals are associated with time-varying, repetitive electromagnetic fields and are directly related to rates of change of currents with time. A current-changing source generates either periodic signals, impulse signals, or a signal that varies randomly with time. To cause interference, a potentially interfering signal must be transferred from the point of generation to the location of the susceptible device. The transfer of noise may occur over one or several paths. There are several modes of signal transfer (i.e., radiation, conduction, and inductive and capacitive coupling).

1.6 BONDING, SHIELDING, AND GROUNDING RELATIONSHIP.

a. The simple grounding of elements of a communications facility is only one of several measures necessary to achieve a desired level of protection and electrical noise suppression. To provide a low-impedance path for (1) the flow of ac electrical current to/from the equipment and (2) the achievement of an effective grounding system, various conductors, electrodes, equipment, and other metallic objects must be joined or bonded together. Each of these bonds should be made so that the mechanical and electrical properties of the path are determined by the connected members and not by the interconnection junction. Further, the joint must maintain its properties over an extended period of time, to prevent progressive degradation of the degree of performance initially established by the interconnection. Bonding is concerned with those techniques and procedures necessary to achieve a mechanically strong, low-impedance interconnection between metal objects and to prevent the path thus established from subsequent deterioration through corrosion or mechanical looseness.

b. The ability of an electrical shield to drain off induced electrical charges and to carry sufficient out-of-phase current to cancel the effects of an interfering field is dependent upon the shielding material and the manner in which it is installed. Shielding of sensitive electrical circuits is an essential protective measure to obtain reliable operation in a cluttered electromagnetic environment. Solid, mesh, foil, or stranded coverings of lead, aluminum, copper, iron, and other metals are used in communications facilities, equipment, and conductors to obtain shielding. These shields are not fully effective unless proper bonding and grounding techniques are employed during installation. Shielding effectiveness of an equipment or subassembly enclosure depends upon such considerations as the frequency of the interfering signal, the characteristics of the shielding material, and the number and shapes of irregularities (openings) in the shield.

1.7 GROUNDING SAFETY PRACTICES.

a. It is essential that all personnel working with Cormmunications-Electronics (C-E) equipment and supporting systems and facilities strictly observe the rules, procedures, and precautions applicable to the safe installation, operation, and repair of equipment and facilities. All personnel must be constantly alert to the potential hazards and dangers presented and take all measures possible to reduce or eliminate accidents.

b. Safety precautions in the form of precisely worded and illustrated danger or warning signs shall be prominently posted in conspicuous places, to prevent personnel from making accidental contact with high-voltage sources such as power lines, antennas, power supplies, or other places where uninsulated contacts present the danger of electrical shock or short circuits. Signs shall also warn of the dangers of all forms of radiation hazards, acids, and chemical inhalation, plus all other potential sources of personnel danger. Power cutoff features built into the equipment must be used in strict adherence to the intended use.

c. During the installation of equipment, warning tags are used to note the existence of potential danger when individual circuits or stages are being checked out. The tags should contain appropriate information to alert all personnel of the dangers involved and specific restrictions as to the use of the equipment. The equipment being installed shall be appropriately tagged in accordance with the directives of the local safety officer, equipment manufacturer, or other responsible agent.

d. Installation personnel, when working with equipment having high-voltage devices, must ensure that the devices are grounded and that the high-voltage circuits have been disconnected or turned off. Do not rely solely on the presence of interlock switches for protection from electrical shock.

CHAPTER 2

EARTH ELECTRODE SUBSYSTEM

2.1 OBJECTIVES.

Earth grounding is defined as the process by which an electrical connection is made to the earth. The earth electrode subsystem is that network of interconnected rods, wires, pipes, or other configuration of metals which establishes electrical contact between the elements of the facility and the earth. This system should achieve the following objectives:

a. Provide a path to earth for the discharge of lightning strokes in a manner that protects the structure, its occupants, and the equipment inside.

b. Restrict the step-and-touch potential gradient in areas accessible to persons to a level below the hazardous threshold even under lightning discharge or power fault conditions.

c. Assist in the control of noise in signal and control circuits by minimizing voltage differentials between the signal reference subsystems of separate facilities.

2.1.1 Lightning Discharge. A lightning flash is characterized by one or more strokes with typical peak current amplitudes of 20 kA or higher. In the immediate vicinity of the point of entrance of the stroke current into the earth, hazardous voltage gradients can exist along the earth's surface. Ample evidence (2-l)* exists to show that such gradients are more than adequate to cause death. It is thus of great importance that the earth electrode subsystem be configured in a manner that minimizes these gradients. The lower the resistance of the earth connection, the lower the peak voltage and consequently the less severe the surface gradients. Even with low resistance earth electrode systems, the current paths should be distributed in a way that minimizes the gradients over the area where personnel might be present.

---

* Referenced documents are listed in the last section of each chapter.

2.1.2 Fault Protection. In the event of transformer failure (e.g., disconnect between neutral and ground or line to ground faults) or any failure between the service conductor(s) and grounded objects in the facility, the earth electrode subsystem becomes a part of the return path for the fault current. A low resistance assists in fault clearance; however, it does not guarantee complete personnel protection against hazardous voltage gradients which are developed in the soil during high current faults. Adequate protection generally requires the use of ground grids or meshes designed to distribute the flow of current over an area large enough to reduce the voltage gradients to safe levels. The neutral conductor at the distribution transformer must therefore be connected to the earth electrode subsystem to ensure that a low resistance is attained for the return path. (Paragraph 5.1.1.2.5.1 of MIL-STD-188-124A refers.) Ground fault circuit interrupters on 120 volt single phase 15 and 20 ampere circuits will provide personnel protection against power faults and their use is therefore highly recommended.

2.1.3 Noise Reduction. The earth electrode subsystem is important for the minimization of electromagnetic noise (primarily lower frequency) within signal circuits caused as a result of stray power currents. For example, consider a system of two structures located such that separate earth electrode subsystems are needed as shown in Figure 2-1. If stray currents (such as may be caused by an improperly grounded ac system, dielectric leakage, high resistance faults, improperly returned dc, etc.) are flowing into the earth at either location, then a voltage differential will likely exist between the grounding networks within each facility.

Currents originating from sources outside the structures can also be the cause of these noise voltages. For example, high voltage substations are frequent sources of large power currents in the earth. Such currents arise from leakage across insulators, through cable insulation, and through the stray capacitance which exists between power lines and the earth. These currents flowing through the earth between the two sites will generate a voltage difference between the earth connections of the two sites in the manner illustrated by Figure 2-2.

Any interconnecting wires or cables will have these voltages applied across the span which will cause currents to flow in cable shields and other conductors. As shown in Chapter 6, such intersite currents can induce common-mode noise voltages into interconnected earth electrode subsystems.

2.1.4 Summary of Requirements. Table 2-1 summarizes the purpose, requirements, and resulting design factors for earth connections of the lightning protection subsystem, the fault protection subsystem, the signal reference subsystem, and the ac distribution system neutral (grounded) conductor and safety ground (grounding) conductor. Refer to Article 100 - Definitions of the NEC for additional information on grounding and grounded conductors (2-2).

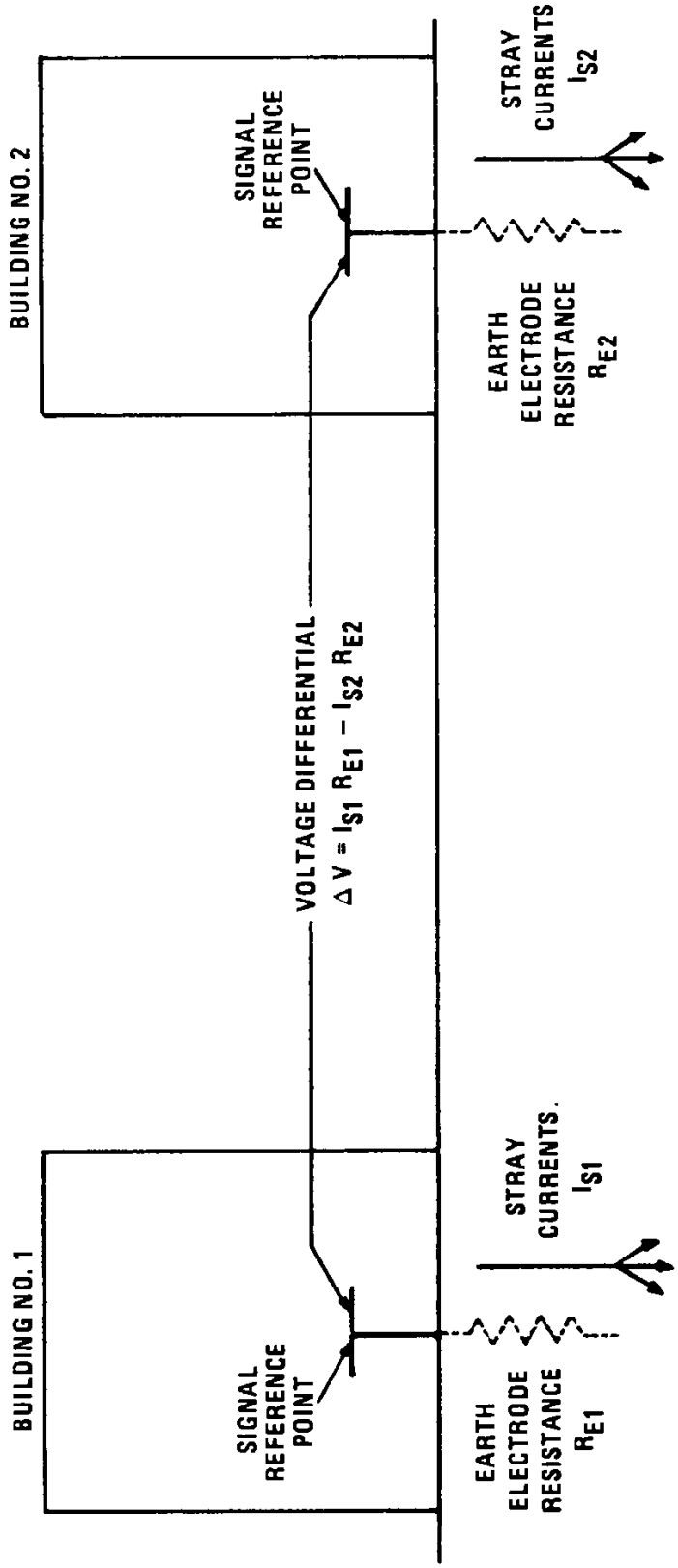

Figure 2-1. Voltage Differentials Arising From Unequal Earth Electrode Resistances and Unequal Stray Currents

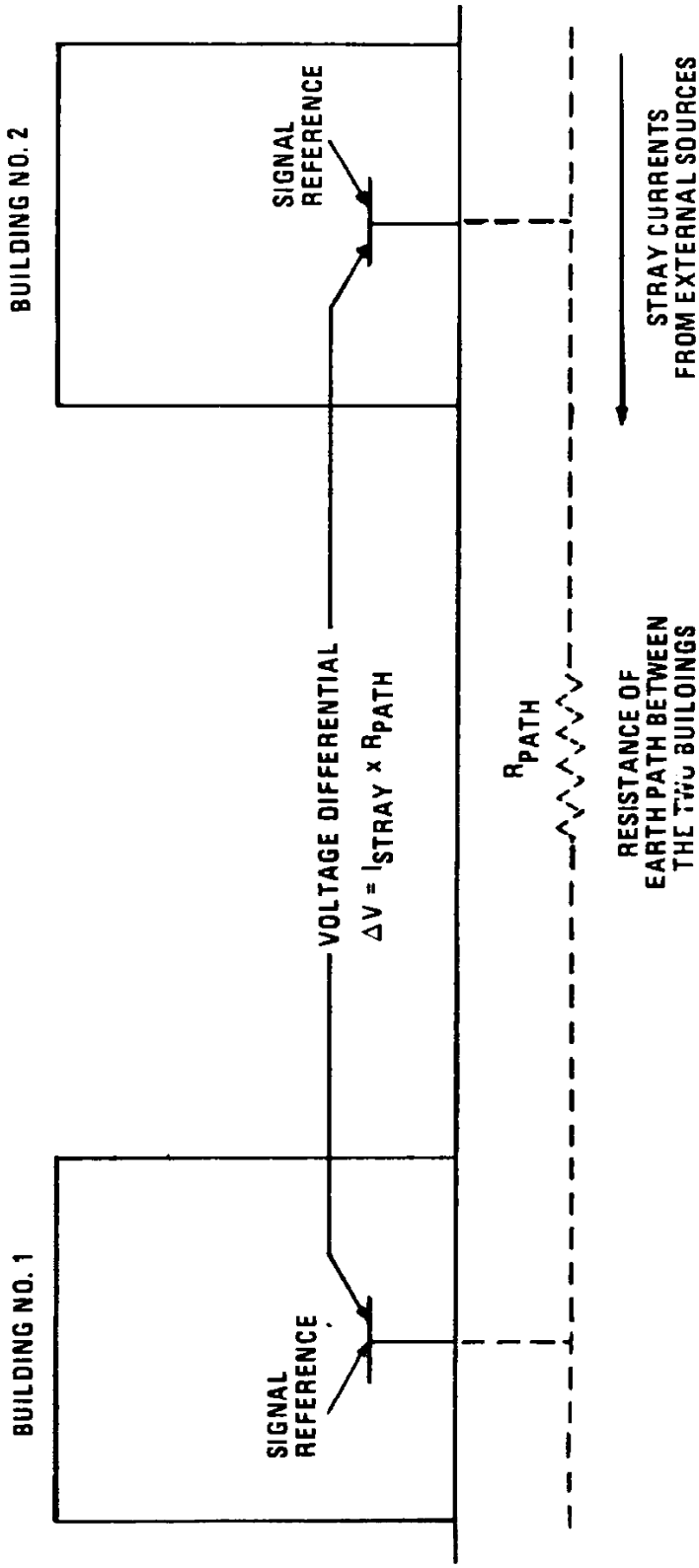

Figure 2-2. Voltage Differentials Between Structures Resulting From Stray Ground Currents

2.2 RESISTANCE REQUIREMENTS.

2.2.1 General. The basic measure of effectiveness of an earth electrode is the value in ohms of the resistance to earth at its input connection. Because of the distributed nature of the earth volume into which electrical energy flows, the resistance to earth is defined as the resistance between the point of connection and a very distant point on the earth (see Section 2.4). Ideally, the earth electrode subsystem provides a zero resistance between the earth and the point of connection. Any physically realizable configuration, however, will exhibit a finite resistance to earth. The economics of the design of the earth electrode subsystem involve a trade-off between the expense necessary to achieve a very low resistance and the satisfaction of minimum system requirements. This subsystem shall also interconnect all driven electrodes and underground metal objects of the facilities including the emergency power plant. Underground metallic pipes entering the facility shall also be bonded to the earth electrode subsystem.

2.2.2 Resistance to Earth. Metal underground water pipes typically exhibit a resistance to earth of less than three ohms. Other metal elements in contact with the soil such as the metal frame of the building, underground gas piping systems, well casings, other piping and/or buried tanks, and concrete-encased steel reinforcing bars or rods in underground footings or foundations generally exhibit a resistance substantially lower than 25 ohms.

2.2.2.1 National Electrical Code Requirements. For the fault protection subsystem, the NEC (2-2) states in Article 250 that a single electrode consisting of a rod, pipe or plate which does not have a resistance to ground of 25 ohms or less shall be augmented by one additional made electrode. Although the language of the NEC clearly implies that electrodes with resistances as high as 25 ohms are to be used only as a last resort, this 25 ohm limit has tended to set the norm for grounding resistance regardless of the specific system needs. The 25 ohm limit is reasonable or adequate for application to private homes and other lower powered type facilities.

2.2.2.2 Department of Defense Communications Electronics Requirements. The above criteria however, is not acceptable for C-E facilities when consideration is given to the large investments in personnel and equipment. A compromise of cost versus protection against lightning, power faults, or EMP has led to establishment of a design goal of 10 ohms for the earth electrode subsystem (EES) in MIL-STD-188-124A. The EES designed in MIL-STD-188-124A specifies a ring ground around the periphery of the facility to be protected. With proper design and installation of the EES, the design goal of 10 ohms should be attained at reasonable cost. At locations where the 10 ohms has not been attained due to high soil resistivity, rock formations, or other terrain features, alternate methods listed in Paragraph 2.9 shall be considered for reducing the resistance to earth.

2.2.3 Lightning Requirements. For lightning protection, it also is difficult to establish a definite grounding resistance necessary to protect personnel. The current which flows in a direct lightning stroke may vary from several hundred amperes to as much as 300 thousand amperes. Such currents through even one ohm of resistance can theoretically produce hazardous potentials. It is impractical to attempt to reduce the resistance of a facility to earth to a value low enough to absolutely prevent the development of these potentials. Techniques other than simply achieving an extremely low resistance to ground must therefore be employed to protect personnel and equipment inside a structure from the hazards produced by a direct stroke. Experience has shown that a grounding resistance of ten ohms gives fairly reliable lightning protection to buildings, transformers, transmission lines, towers, and other exposed structures. At some sites, resistances as low as one ohm or less can be achieved economically. The lower the resistance, the greater the protection; therefore, attempts should be made to reduce the resistance to the lowest practical value.

Table 2-1

Facility Ground System: Purposes, Requirements, and Design Factors

Subsystem	Purpose	Requirements	Design Factors
Lightning Protection	Dissipate lightning energy in earth.	Multiple connections to earth electrode subsystem, high peak power transfer capability, low impulse impedance to minimize magnitude of transient potentials.	Lightning protection subsystem must be sized to dissipate energy in a lightning pulse (worst case) without producing hazardous voltages or damage to itself.
Fault Protection	Provide fault current path to operate equipment breakers, blow fuses, etc.	Low resistance in the return path for fault current, maintain voltage of equipment enclosures near earth potential.	Resistance should be low enough to permit operation of facility over-current devices when faults occur.
Signal Reference	Reduce noise in signal circuits, provide leakage path for static charges, establish voltage reference.	Establish reference potential for signal voltages, provide sink for static charge.	Fault currents and lightning protection system currents normally should not flow in the signal reference network; earth connection should not degrade signal quality.
Earth Electrode	Low resistance path to earth.	Provides link for lightning protection, fault protection and signal reference subsystems to earth.	Installed around periphery of building or tower to be protected.

2.3 SOIL RESISTIVITY.

2.3.1 General. The resistivities of the soil and rock in which the earth electrode subsystem is buried, constitute the basic constraint on the achievement of a low resistance contact with earth. The resistance of an earth electrode subsystem can in general be calculated with formulas which are based upon the general resistance formula.

$$R = \rho \frac{\ell}{A} = \frac{E}{I} \tag{2-1}$$

where ρ is the resistivity of the conducting material, ℓ is the length of the path for current flow in the earth, A is the cross-sectional area of the conducting path, I is the current into the electrode, and E is the voltage of the electrode measured with respect to infinity. It will be shown later in this chapter that if the soil resistivity is known, the resistance of the connection provided by the more common electrode configurations can be readily determined.

The soils of the earth consist of solid particles and dissolved salts. Electrical current flows through the earth primarily as ion movement; the ionic conduction is heavily influenced by the concentration and kinds of salts in the moisture in the soil. Ionic disassociation occurs when salts are dissolved, and it is the movement of these ions under the influence of electrical potential which enable the medium to conduct electricity.

Resistivity is defined in terms of the electrical resistance of a cube of homogeneous material. The resistance of a homogeneous cube, as measured across opposite faces, is proportional to the resistivity and inversely proportional to the length of one side of the cube. The resistance is

$$R = \rho \frac{L}{A} = \rho \frac{L}{L^2} = \left(\frac{\rho}{L}\right) \text{ ohms} \tag{2-2}$$

where ρ = resistivity of the material, ohms - (unit-of-length);
L = length of one side of the cube, (unit-of-length), and
A = area of one face of the cube, $(\text{unit-of-length})^2$.

Common units of resisitivity are ohm-cm and ohm-m.

2.3.2 Typical Resistivity Ranges. A broad variation of resistivity occurs as a function of soil types, and classification of the types of soils at a potential site for earth electrodes is needed by the designer. Table 2-2 permits a quick estimate of soil resistivity, while Table 2-3 lists measured resistivity values from a variety of sources. Tables 2-2 and 2-3 indicate that ranges of one or two orders of magnitude in values of resistivity for a given soil type are to be expected.

2.3.3 Environmental Effects. In addition to the variation with soil types, the resistivity of a given type of soil will vary several orders of magnitude with small changes in the moisture content, salt concentration, and soil temperature. It is largely these variations in soil environment that cause the wide range of values for each soil type noted in Tables 2-2 and 2-3. Figure 2-3 shows the variations observed in a particular soil as moisture, salt, and temperature were changed. The curves are intended only to indicate trends -- another type of soil would be expected to yield curves with similar shapes but different values.

The discontinuity in the temperature curve (Figure 2-3(b)), indicates that at below freezing temperatures the soil resistivity increased markedly. This undesirable temperature effect can be minimized by burying earth electrode subsystems below the frost line.

2.4 MEASUREMENT OF SOIL RESISTIVITY.

2.4.1 General. It is not always possible to ascertain with a high degree of certainty the exact type of soil present at a given site. Soil is typically rather nonhomogeneous; many types will be encountered at most locations. Even with the aid of borings and test samples and the use of Table 2-3, the resistivity estimate can easily be off by two or three orders of magnitude. When temperature and moisture variations are added to the soil type variations, it is evident that estimates based on Table 2-3 are not sufficiently accurate for design purposes. The only way to accurately determine the resistivity of the soil at a specific location is to measure it.

2.4.2 Measurement Techniques. The most commonly used field methods for determining soil resistivity employ the technique of injecting a known current into a given volume of soil, measuring the voltage drop produced by the current passing through the soil, and then determining the resistivity from a modified form of Equation 2-1.

2.4.2.1 One-Electrode Method. To illustrate the principles of this technique, first visualize a metal hemisphere buried in the earth as shown in Figure 2-4. In uniform earth, injected current flows radially from this hemispherical electrode. Equipotential surfaces are established concentric with the electrode and perpendicular to the radial directions of current flow. (Regardless of the shape of an electrode, it can be approximated as a hemispherical electrode if viewed from far enough away.) As the current flows from the hemisphere, the current density decreases with distance from the electrode because the areas of successive shells become larger and larger. The current density within the earth, at a given distance x from the center of the electrode is

$$i_x = \frac{I}{2\pi x^2} \text{ amperes per unit area,} \tag{2-3}$$

where

I = current entering the electrode and

$2\pi x^2$ = area of the hemispherical shell with radius x.

At the point x the electric field strength can be obtained from Ohm's law:

$$e_x = \rho\, i_x, \tag{2-4}$$

$$= \frac{\rho I}{2\pi x^2} \text{ volts per unit length.}$$

where ρ is resistivity of material.

Table 2-2

Approximate Soil Resistivity (2-3)

Type of Soil	Resistivity (ohm-m)	(ohm-cm)	(ohm-ft)
Wet Organic Soil	10	10^3	33
Moist Soil	10^2	10^4	330
Dry Soil	10^3	10^5	3300
Bed Rock	10^4	10^6	33000

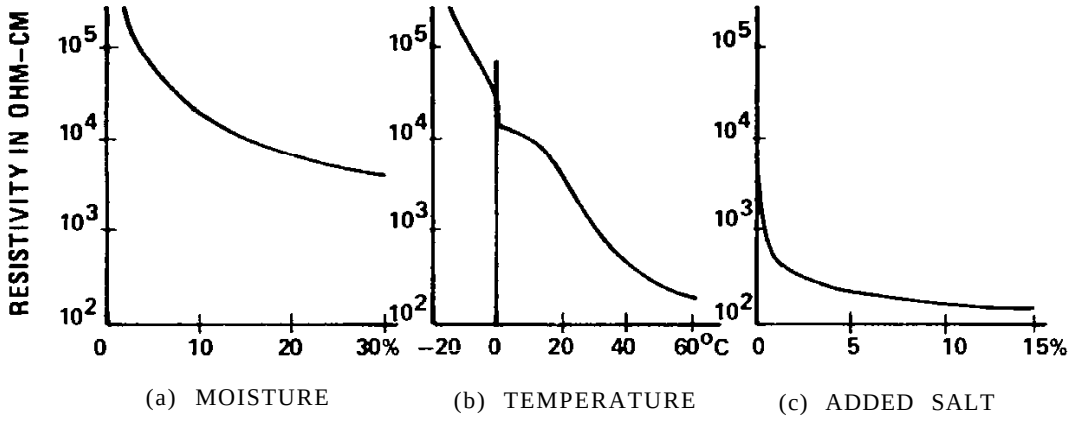

Figure 2-3. Typical Variations in Soil Resistivity as a Function of Moisture, Temperature and Salt Content (2-4)

Table 2-3

Resistivity Values of Earthing Medium (2-5), (2-6), (2-7)

Medium	Resistivity		
	Minimum (ohm-cm)	Average (ohm-cm)	Maximum (ohm-cm)
Surface soils, loam, etc.	10^2		5×10^3
Clay	2×10^2		10^4
Sand and gravel	5×10^3		10^5
Surface limestone	10^4		106
Limestones	5×10^2		4×10^5
Shales	5×10^2		10^4
Sandstone	2×10^3		2×10^5
Granites, basalts, etc.		10^6	
Decomposed gneisses	5×10^3		5×10^4
Slates, etc.	10^3		10^4
Fresh Water Lakes		2×10^4	2×10^7
Tap Water	10^3		5×10^3
Sea Water	20	10^2	2×10^2
Pastoral, low hiIls, rich soil, typical of Dallas, Texas; Lincoln, Nebraska areas		3×10^3	
Flat country, marshy, densely wooded typical of Louisiana near Mississippi River	2×10^2	10^4	
Pastoral, medium hills and forestation, typical of Maryland, Pennsylvania, New York, exclusive of mountainous territory and seacoasts		2×10^4	
Rocky soil, steep hills, typical of New England	10^3	5×10^4	10^5
Sandy, dry, flat, typical of coastal count r y	3×10^4	5×10^4	5×10^5
City, industrial areas		10^5	10^6

Table 2-3 (Continued)

Resistivity Values of Earthing Medium (2-5), (2-6), (2-7)

Medium	Resistivity		
	Minimum (ohm-cm)	Average (ohm-cm)	Maximum (ohm-cm)
Fills, ashes, cinders, brine, waste	6×10^2	2.5×10^3	7×10^3
Clay, shale, gumbo, loam	3×10^2	4×10^3	2×10^4
Same-with varying proportion of sand and gravel	10^3	1.5×10^4	10^5
Gravel, sand stones with little clay or loam, granite	5×10^4	$1\ 0^5$	10^6

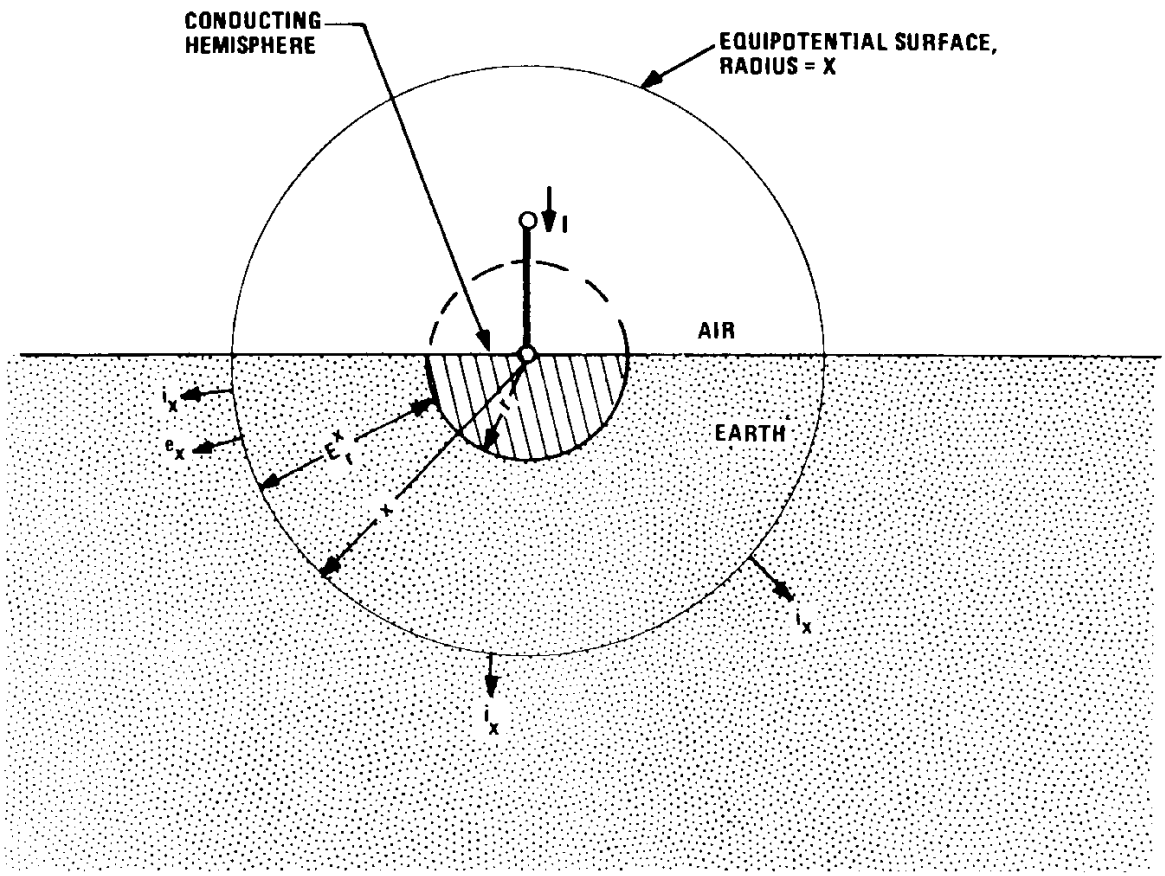

Figure 2-4. Current Flow From a Hemisphere in Uniform Earth

The voltage from the surface of the electrode to the point x is the line integral of e_x with the lower limit equal to the sphere's radius, r, and the upper limit equal to the distance, x:

$$E_r^x = \int_r^x e_x \, dx \tag{2-5}$$

$$= \frac{\rho I}{2\pi} \int_r^x \frac{dx}{x^2}$$

$$E_r^x = \frac{\rho I}{2\pi} \left[\frac{1}{r} - \frac{1}{x} \right]$$

As x becomes very large, E is closely approximated as

$$E = \frac{\rho I}{2\pi r} \tag{2-6}$$

The resistance to the earth of the electrode is the resistance between the electrode and a very distant point; therefore

$$R = \frac{E}{I} = \frac{\rho}{2\pi r} \tag{2-7}$$

where: E = the voltage drop between the electrode and a point infinitely distant,
I = the current entering the electrode,
ρ = earth resistivity, and
r = radius of hemisphere.

Rewriting Equation 2-7 as

$$\rho = 2\pi r \, R = 2\pi r \frac{E}{I} \tag{2-8}$$

shows that the resistivity can be determined by knowing r, E, and L

2.4.2.2 Four-Terminal Method. In the four-terminal method developed by the U.S. Bureau of Standards (2-8), four electrodes are inserted into the soil in a straight line with equal spacings. A known current is injected into the soil through the end electrodes and the voltage drop between the two inside electrodes is measured.

Consider four deeply buried spheres placed in a straight line, separated by a distance, a, as shown in Figure 2-5. Connection is made to the spheres by insulated conductors. Assume that a current, I, is introduced into one of the outermost spheres (No. 1) and flows out of the earth through the other (No. 4) outermost sphere. The voltage from the left hand (No. 2) to the right hand (No. 3) inner sphere can be viewed as resulting from a current flowing to infinity and another returning from infinity. The two resulting components of the voltage are (2-8)

$$V_1 = \frac{\rho I_i}{8\pi a}, \tag{2-9}$$

where I_i = input current,

and

$$V_2 = \frac{\rho I_o}{8\pi a}, \tag{2-10}$$

where I_o = output current.

But since $I_o = I_i$,

the total potential V is

$$v = V_1 + V_2 \tag{2-11}$$

$$= \frac{\rho I}{4\pi a}$$

If the probe depth, h, is less than the probe separation distance, a, the potential drop measured between the inner electrodes divided by the current measured into (or out of) one of the outer electrodes is (2-8):

$$R = \frac{V}{I} = \frac{\rho}{4\pi}\left(\frac{1}{a} + \frac{2}{\sqrt{a^2 + 4h^2}} - \frac{2}{\sqrt{4a^2 + 4h^2}}\right), \qquad (2\text{-}12)$$

where: a = distance between four, equally spaced, in-line probes, and

h = depth of burial of probes (insulated leads to surface).

If h << a, Equation 2-12 simplifies to

$$R = \frac{\rho}{2\pi a} \qquad (2\text{-}13)$$

or

$$\rho = 2\pi a R . \qquad (2\text{-}14)$$

Short rods provide an effective approximation to the buried sphere, particularly at distances large with respect to the depth of insertion.

The typical earth resistance test set contains a hand powered generator which can generate an ac signal at frequencies of 40 to 100 hertz or so. (Fifty or sixty hertz should not be used because errors may be produced by stray power currents in the soil. Direct current is not usually used because of polarization effects.) By adjusting the resistance of an internal double balanced bridge, the instrument provides a direct indication of the R required in Equation 2-14.

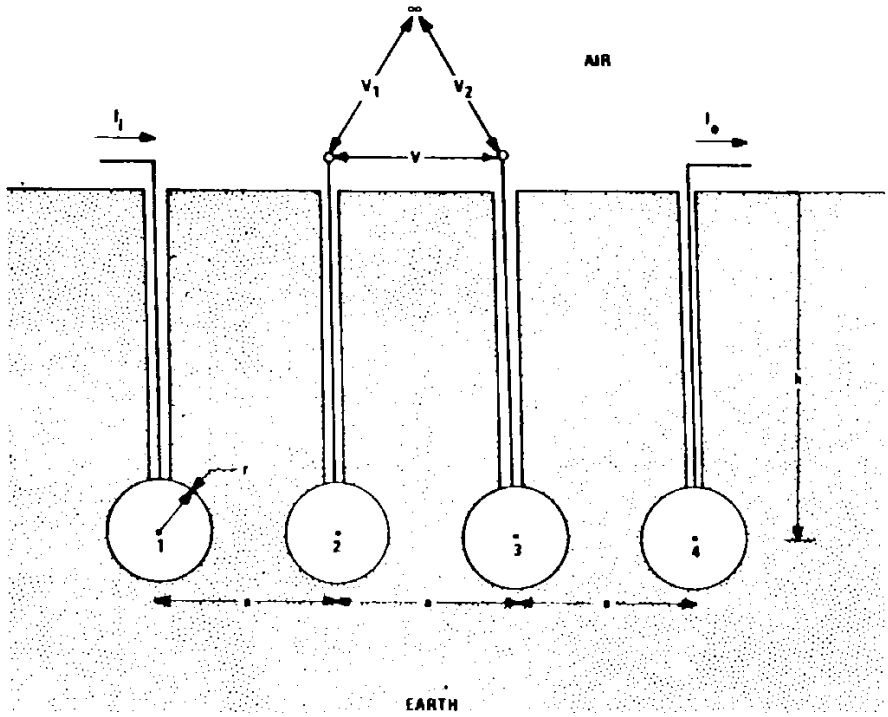

Figure 2-5. Idealized Method of Determining Soil Resistivity

2.5 TYPES OF EARTH ELECTRODE SUBSYSTEMS.

2.5.1 General. Earth electrode subsystems can be divided into two general types, the most preferable being a ring ground with 10-foot (3-meter) minimum length ground rods every 15 feet (4.5 meters). A second and less preferable type consists of a system of radials or grounds used when soil is rocky or has extremely high resistivity. At sites where soil resistivity varies from high to very high and frequent electrical storms are common, a combination of the two is recommended, i.e., a ring ground around the building (worst case-grid under building) extending 2 to 6 feet (0.6 to 1.8 meters) outside the drip line with radials or horizontal conductors extending to 125 feet (37.5 meters). With either system, resistance to earth and danger of arc over can be greatly reduced by bonding any large metal objects in the immediate area to the earth electrode subsystem. These include metal pipes, fuel tanks, grounded metal fences, and well casings.

2.5.2 Ground Rods. Vertically driven ground rods or pipes are the most common type of made electrode. Rods or pipes are generally used where bedrock is beyond a depth of 3 meters (10 feet). Ground rods are commercially manufactured in 1.27, 1.59, 1.90 and 2.54 cm (1/2, 5/8, 3/4 and 1 inch) diameters and in lengths from 1.5 to 12 meters (5 to 40 feet). For most applications, ground rods of 1.90 cm (3/4 inch) diameter, and length of 3.0 meters (10 feet), are used. Copper-clad steel ground rods are required because the steel core provides the strength to withstand the driving force and the copper provides corrosion protection and is compatible with copper or copper-clad interconnecting cables.

2.5.3 Buried Horizontal Conductors. Where bedrock is near the surface of the earth, the use of driven rods is unpractical. In such cases, horizontal strips of metal, solid wires, or stranded cables buried 0.48 to 0.86 meters (18 to 36 inches) deep may be used effectively. With long strips, reactance increases as a factor of the length with a consequent increase in impedance. A low impedance is desirable for minimizing lightning surge voltages. Therefore, several wires, strips, or cables arranged in a star pattern, with the facility at the center, is preferable to one long length of conductor.

2.5.4 Grids. Grid systems, consisting of copper cables buried about 15.24 cm (6 inches) in the ground and forming a network of squares, are used to provide equipotential areas throughout the facility area. Such a system usually extends over the entire area. The spacing of the conductors, subject to variation according to requirements of the installation, may normally be 0.6 to 1.2 meters (2 to 4 feet) between cables. The cables must be bonded together at each crossover.

Grids are generally required only in antenna farms or substation yards and other areas where very high fault currents are likely to flow into the earth and hazardous step potentials may exist (see Section 2.8.1.2.3) or soil conditions prohibit installation of other ground systems. Antenna counterpoise systems shall be installed in accordance with guidance requirements of the manufacturer.

2.5.5 Plates. Rectangular or circular plate electrodes should present a minimum of 0.09 square meters (2 square feet) of surface contact with the soil. Iron or steel plates should be at least 0.64 cm (1/4 inch) thick and nonferrous metals should be at least 0.15 cm (0.06 inches) thick. A burial depth of 1.5 to 2.4 meters (5 to 8 feet) below grade should be maintained. This system is considered very expensive for the value produced and generally not recoin mended.

2.5.6 Metal Frameworks of Buildings. The metal frameworks of buildings may exhibit a resistance to earth of less than 10 ohms, depending upon the size of the building, the type of footing, and the type of subsoil at a particular location. Buildings that rest on steel pilings in particular may exhibit a very low resistance connection to earth. For this low resistance to be used advantageously, it is necessary that all elements of the framework be bonded together.

2.5.7 Water Pipes. Metal underground pipes have traditionally been relied upon for grounding electrodes. The resistance to earth provided by piping systems is usually quite low because of the extensive contact made with soil. Municipal water systems in particular establish contact with the soil over wide areas. For water pipes to be effective, any possible discontinuities must be bridged with bonding jumpers. The NEC requires that any water metering equipment and service unions be bypassed with a jumper not less than that required for the grounding connector.

However, stray or fault currents flowing through the piping network into the earth can present a hazard to workmen making repairs or modifications to the water system. For example, if the pipes supplying a building are disconnected from the utility system for any reason, that portion connected to the building can rise to a hazardous voltage level relative to the rest of the piping system and possibly with respect to the earth. In particular, if the resistance that is in contact with the soil near the building happens to be high, a break in the pipe at even some distance from the building may pose a hazardous condition to unsuspecting workmen. Some water utilities are inserting non-conductive couplings in the water mains at the point of entrance to buildings to prevent such possibilities. For these reasons, the water system should not be relied upon as a safe and dependable earth electrode for a facility and should be supplemented with at least one other ground system.

2.5.8 Incidental Metals. There may be a number of incidental, buried, metallic objects in the vicinity of the earth electrode subsystem. These objects should be connected to the system to reduce the danger of potential differences during lightning or power fault conditions: their connection will also reduce the resistance to earth of the earth electrode subsystem. Such additions to the earth electrode subsystem should include the rebar in concrete footings, buried tanks, and piping.

2.5.9 Well Casings. Well casing can offer a low resistance contact with the earth. In some areas, steel pipe used for casing in wells can be used as a ground electrode. Where wells are located on or near a site, the resistance to earth of the casing should be measured and, if below 10 ohms, the well casing can be considered for use as a ground electrode.

2.6 RESISTANCE PROPERTIES.

2.6.1 Simple Isolated Electrodes.

2.6.1.1 Driven Rod. The resistance to earth of the vertical rod in homogeneous earth can be developed by approximating the rod as a series of buried spherical elements (2-3). When the contributions of the elemental spheres are integrated along the length of rod and its image, the resistance to earth of the vertical rod is computed to be:

$$R_o \simeq \frac{\rho}{2\pi\ell} \ln \frac{4\ell}{d} \tag{2-15}$$

where

d = rod diameter, in cm,
ρ = earth resistivity in ohm-cm,
ℓ = rod length, in cm.

An inaccuracy in the derived result arises from the assumption that equal incremental currents flow from the incremental spheres. Actually, more current per unit length flows into the soil near the earth's surface than at the lower end of the rod. It has been found empirically that the expression

$$R_o = \frac{\rho}{2\pi\ell} \ln \frac{3\ell}{d} \tag{2-16}$$

$$= \frac{0.159\rho}{\ell} \ln \frac{3\ell}{d}$$

$$= (2.306) \frac{0.159\rho}{\ell} \log \frac{3\ell}{d}$$

$$= \frac{0.366\rho}{\ell} \log \frac{3\ell}{d}$$

is a better approximation to the resistance to ground for a driven vertical rod. The net difference in resistance as given by Equations 2-15 and 2-16 is about 10 percent.

The resistance of the rod is directly affected by changes in the length of the rod and by the logarithm of the length. Changes in the diameter only show up as slight changes in the logarithm in Equation 2-15 and 2-16. Figures 2-6 and 2-7 show the measured changes in resistance that occurs with rod length and rod diameter. It is evident that effects of rod length do predominate over the effects of rod diameter.

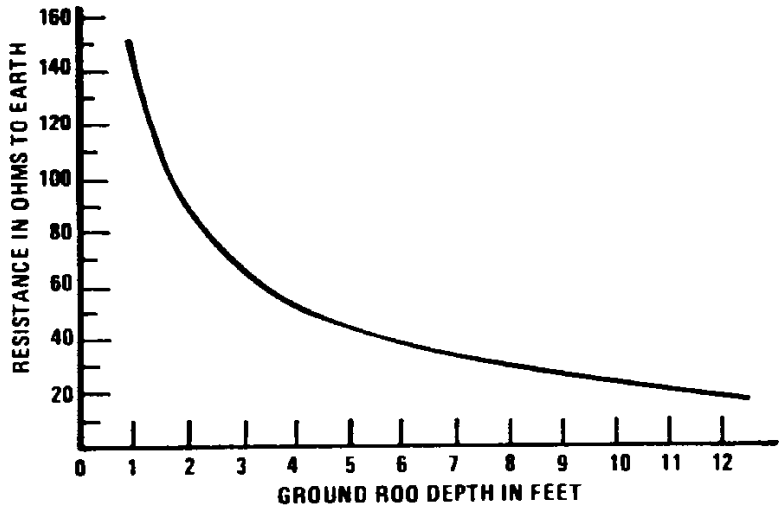

Figure 2-6. Effect on Rod Length Upon Resistance. (2-6)

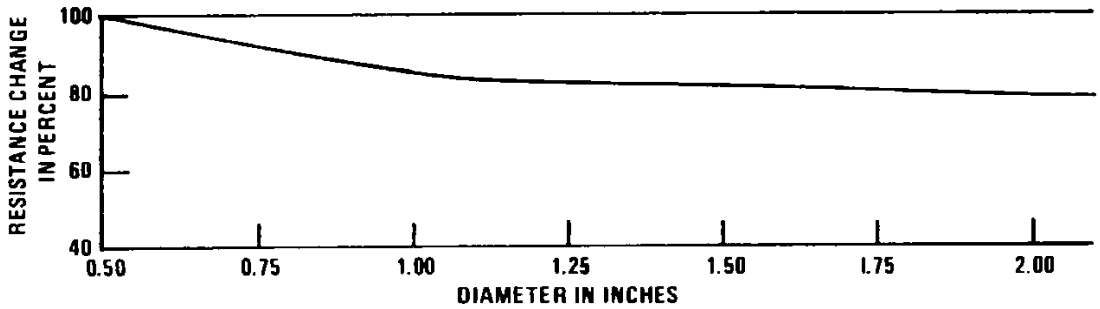

Figure 2-7. Effect of Rod Diameter Upon Resistance (2-6)

The earth surrounding the rod can be depicted conveniently as consisting of shells of earth of uniform thickness, as shown in Figure 2-8. The incremental resistance (in the direction of current flow) of each shell is given by

$$\frac{dR}{dr} = \rho \frac{d}{dr}\left(\frac{\ell}{A}\right) \tag{2-17}$$

which is a special form of Equation 2-1. The soil resistivity is ρ and dr is the incremental path length in the direction of current flow. The shell of earth nearest the electrode has the smallest area and thus exhibits the highest incremental resistance. This fact has two practical ramifications. First, lowest earth resistance is obtained with electrode configurations which have largest areas in contact with the earth. Second, changes which occur in the soil adjacent to the conductor have a significant effect on the electrode-to-earth contact resistance. For example, lightning discharge currents may heat the soil adjacent to the conductors, drying the soil or converting it to slag and thus increasing the electrode resistance to earth. One reason for providing a large contact area between the electrode and the earth is to minimize the current density in the soil immediately adjacent to the electrode, thus reducing the heating of the soil.

The current which flows into the ground rod flows outward through each equipotential shell, and the potential on the earth's surface at a distance, x, from the rod is (2-3)

$$E_x = \frac{0.366\rho I}{\ell} \log \left[\frac{\ell}{x} + \sqrt{1 + \left(\frac{\ell}{x}\right)^2} \right]. \tag{2-18}$$

The ratio E_x/I is equivalent to Rx, that portion of resistance-to-ground of the rod which lies between the point X and infinity:

$$R_x = \frac{E_x}{I} = \frac{0.366\rho}{\ell} \log \left[\frac{\ell}{x} + \sqrt{1 + \left(\frac{\ell}{x}\right)^2} \right]. \tag{2-19}$$

The ratio of R_x to R_o is

$$\frac{R_x}{R_o} = \frac{\log \left[\frac{\ell}{x} + \sqrt{1 + \left(\frac{\ell}{x}\right)^2} \right]}{\log \frac{3\ell}{d}}, \tag{2-20}$$

where ℓ, d, and x are in the same units.

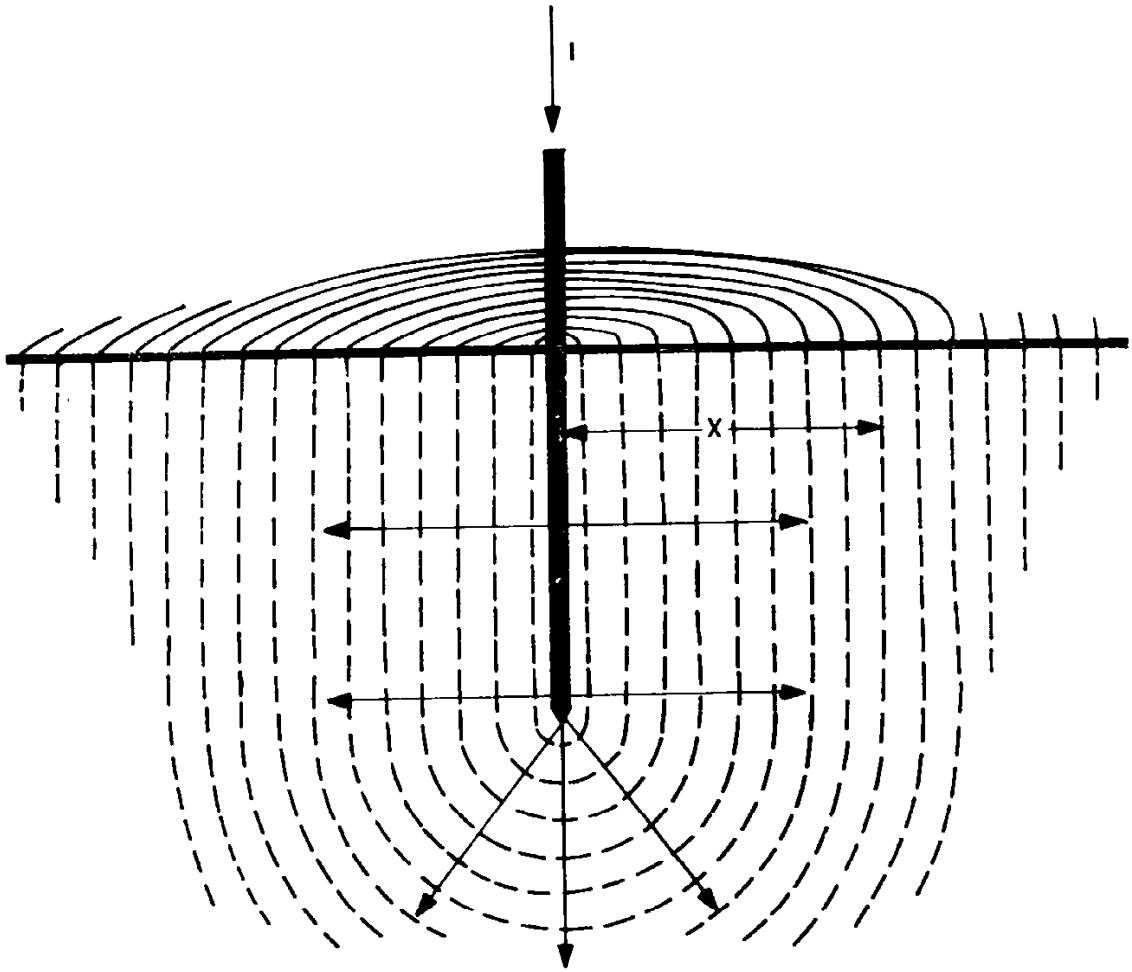

Figure 2-8. Earth Resistance Shells Surrounding a Vertical Earth Electrode

Equation 2-20 permits the area of influence of a single rod to be determined. For example, consider a 10-foot long, l-inch diameter rod at distance $x = \ell$:

$$\frac{R_\ell}{R_o} = \frac{\log(1 + \sqrt{2})}{\log 360}$$

$$= 0.15$$

The ratio of 0.15 indicates that 85 percent of the total resistance to earth of a 10-foot long ground rod is established within 10 feet of the rod. For a 100-foot rod, 89 percent of the grounding resistance is obtained within 100 feet of the rod.

At a distance equal to two ground rod lengths, x = 2ℓ

$$\frac{R_{2\ell}}{R_o} = \frac{\log (0.5 + \sqrt{1.25})}{\log 360}$$

$$= 0.08$$

Thus 92 percent of the resistance of a 10-foot by l-inch rod is obtained in a 20-foot radius cylinder. Similarly, 94 percent of the resistance of a 100-foot by l-inch rod is obtained in a 200-foot radius cylinder. The resistance distribution for representative vertical electrodes is tabulated in Table 2-4.

Table 2-4

Resistance Distribution for Vertical Electrodes

Type of Rod Electrode	Total Resistance (W	Approximate Distance from Rod (feet)
3/4-inch pipe, driven 3-feet deep	90	6
	95	12
	98	31
	99	61
3/4-inch pipe, driven 5-feet deep	90	9
	95	18
	98	46
	99	92
1-1/4-inch pipe, driven 19-feet deep	90	18
	95	35
	98	88
	99	176
2-1/2-inch pipe, driven 20-feet deep	90	25
	95	69
	98	173
	99	345

Simple Isolated Electrodes

Order	Type	Conditions for Ranking	Resistance to Earth
R_1	Vertical-Rod		$R_1 = 0.366 \frac{\rho}{\ell} \log \frac{3\ell}{d}$
R_2	Buried Sphere	$\ell > 16d$, $r_s = \frac{\sqrt{d\ell}}{2}$	$R_2 = 0.08 \frac{\rho}{r} \left(1 + \frac{r}{2h}\right)$
R_3	Buried Circular Plate	$h > 3.2r_p = 4.5r_s$	$R_3 = 0.125 \frac{\rho}{r} \left(1 + \frac{r}{2.5\,h + r}\right)$
R_4	Half Buried Sphere (Buried Hemisphere)	$h > 1.1r_s = r_p$,	$R_4 = 0.16 \frac{\rho}{r}$
R_5	Circular Plate on Surface of Earth		$R_5 = 0.25 \frac{\rho}{r}$
R_6	Buried Straight Rod or Wire	$h < 0.4\ell$, $r_p = \sqrt{d\ell}$	$R_6 = 0.366 \frac{\rho}{\ell} \left(\log \frac{\ell}{d} + \log \frac{\ell}{4h} + 0.34\right)$
R_7	Buried Right Angle	$h > 0$,	$R_7 = 0.366 \frac{\rho}{\ell} \left(\log \frac{\ell}{d} + \log \frac{\ell}{4h} + 0.5 + 0.38 \frac{h}{\ell}\right)$
R_8	Buried Circle of Wire	$h < 0.8\ell$	$R_8 = 0.366 \frac{\rho}{\ell} \left(\log \frac{\ell}{d} + \log \frac{\ell}{4h} + 0.81\right)$
R_9	Buried Four Point Star	$h < 0.12\ell$	$R_9 = 0.366 \frac{\rho}{\ell} \left(\log \frac{\ell}{d} + \log \frac{\ell}{4h} + 1.26 - 3.72 \frac{h}{\ell}\right)$

Note: $\log X = \log_{10} X$, r_s = radius of sphere, r_p = radius of plate: ℓ = total length of buried rod or wire, in cm; d = diameter of rod or wire, in cm; and h = depth of burial, in cm. ρ = ohm-cm. The ranking assumes that each electrode has equal surface area in contact with the earth.

2.6.1.2 Other Commonly Used Electrodes. Table 2-5 lists a number of simple isolated earthing electrodes along with approximate formulas for their resistance to earth. The plate and spherical electrodes are extensive in area, whereas the vertical rod, the horizontal rod (or wire), the star, and the circle are extensive in length. The electrodes in Table 2-5 have been ranked after being normalized for equal surface area in contact with the earth. The order of ranking is such that the lowest resistance-to-earth electrode (the most effective) heads the list. As an example, a circular plate lying on the earth's surface is a more effective electrode (has a lower resistance to earth) than a buried, horizontal rod which has the same area in contact with the earth, assuming that the rod is buried at a depth less than 40 percent of its length.

The resistance to earth provided by horizontal conductors as a function of length is shown in Figure 2-9 for two depths of burial. Note that as the length is doubled, the resistance is approximately halved. The curves of Figure 2-9 assume that the conductors are laid out in a straight line. If the strips are coiled or curved, the resistance tends to be higher because the cross-sectional area of the soil affected is less.

The resistance of a plate ground is dependent upon the area of the plate. The variation of resistance as a function of the radius of a circular plate is illustrated in Figure 2-10 for three depths of burial. These curves are calculated for a plate in soil of uniform resistivity of 10,000 ohm-cm. Similar relationships hold for rectangular plates; the curves as shown should be considered to indicate the behavior of resistance as a function of area rather than as a prediction of the resistance of plate of a given area.

2.6.2 Resistance of Multiple Electrodes. The theoretical resistance of an electrode, such as given by Equation 2-16, is obtained only at an infinite distance from the electrode. As shown in Section 2.6.1.1, however, most of the resistance of a single electrode is obtained within a reasonable distance from the electrode. (For a vertical rod, better than 90 percent is realized within two rod lengths.) If two or more electrodes are closely spaced, however, the total effective resistance of neither is realized. This interaction prevents the resistance of N electrodes connected in parallel from being l/N times the resistance of one of the electrodes. For this reason, the crowding of multiple vertical rods is not as beneficial in terms of dollar cost per ohm as is achievable with fewer rods properly spaced. If the electrodes in a multiple electrode installation are separated by adequate distances, the interactive influence is minimized. The separation between driven vertical ground rods in a group of rods should not be less than the length or greater than twice the length of an individual rod.

2.6.2.1 Two Vertical Rods in Parallel. Expressions for the resistance of multiple electrodes are more complex than those for isolated electrodes. To illustrate, consider two rods driven into the earth with their tops flush with the surface as shown in Figure 2-11. The two rods are electrically in parallel, but the presence of one rod affects the resistance of the other. The resistance-to-earth of two rods (2-9) is

$$R = \frac{\rho}{4\pi\ell}\left[\ln\left(\frac{2\ell + \sqrt{s^2 + 4\ell^2}}{s}\right) + \frac{s}{2\ell} - \sqrt{\frac{s^2 + 4\ell^2}{2\ell}} + \ln\frac{4\ell}{r} - 1\right], \qquad (2\text{-}21)$$

where s = spacing between rods.

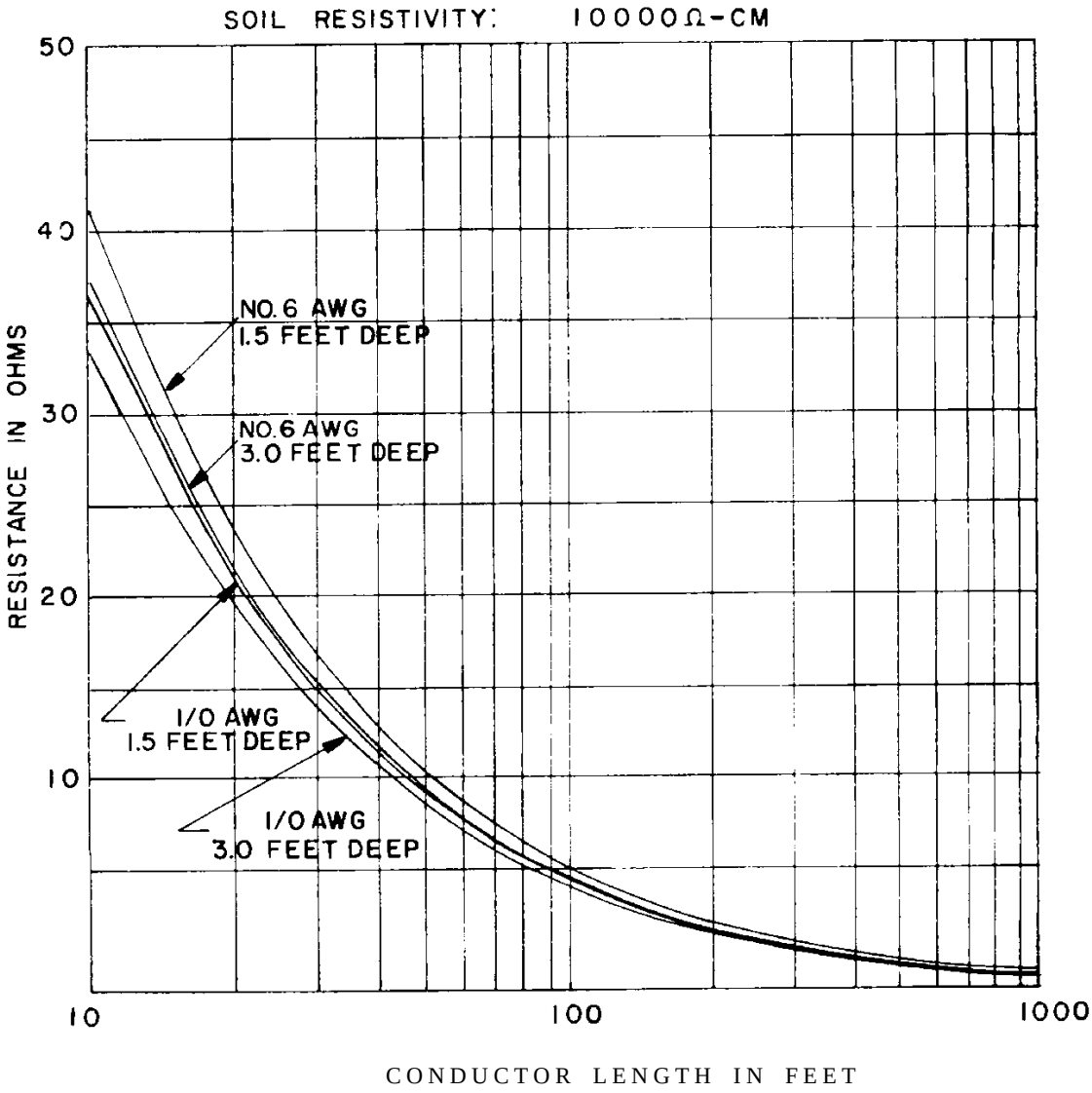

Figure 2-9. Resistance of Buried Horizontal Conductors

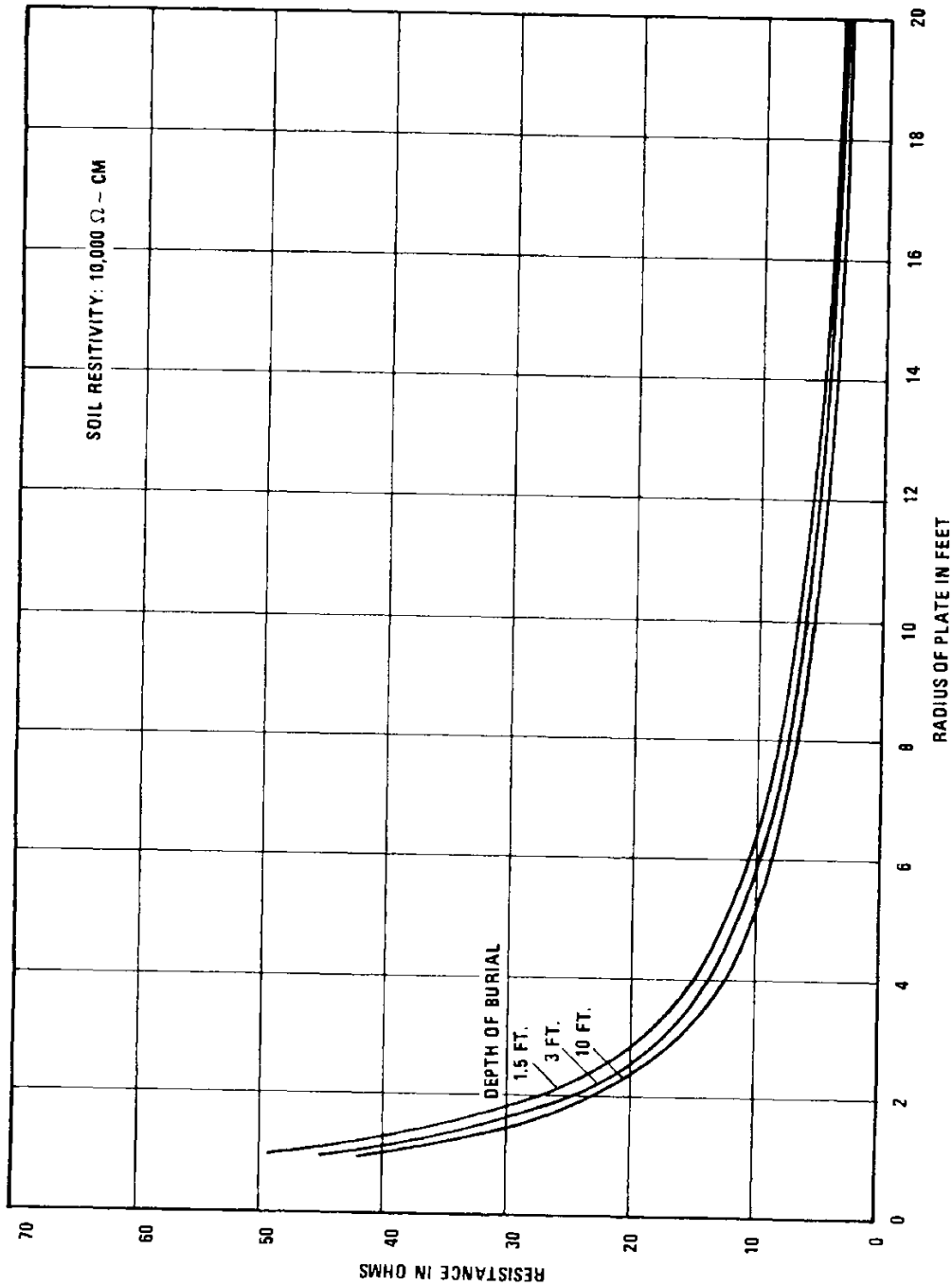

Figure 2-10. Resistance of Buried Circular Plates

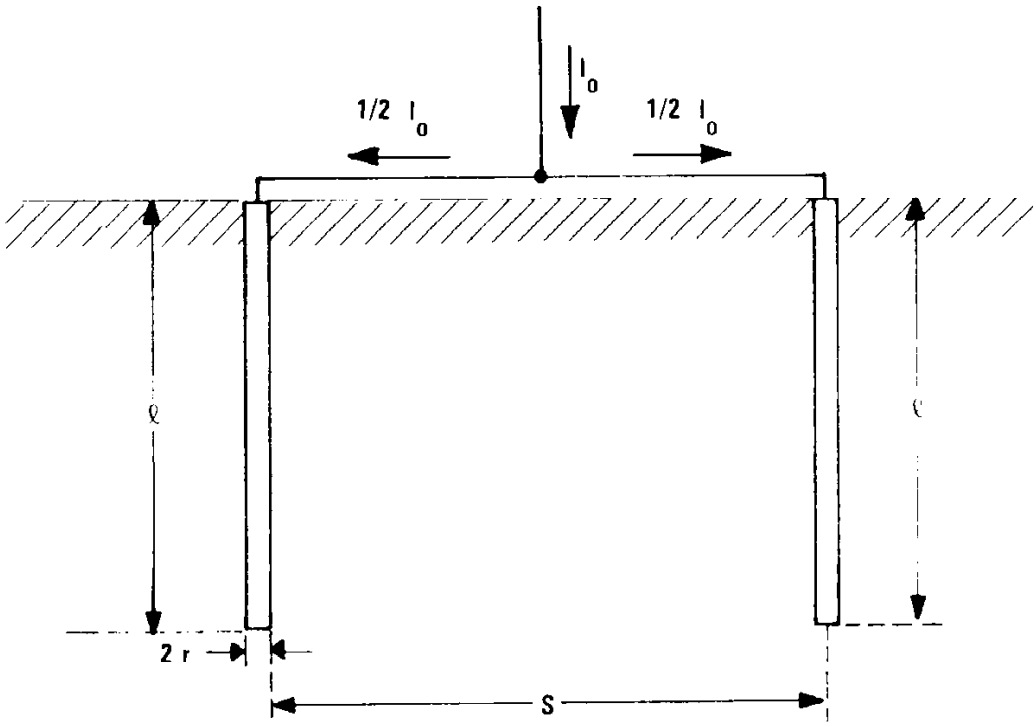

Figure 2-11. Ground Rods in Parallel

For the condition of $s > \ell$,

$$R \simeq \frac{\rho}{4\pi\ell}\left(\ln\frac{4\ell}{r} - 1\right) + \frac{\rho}{4\pi s}\left(1 - \frac{\ell^2}{3s^2} + \frac{2}{5}\frac{\ell^4}{s^4} + \ldots\right). \quad (2\text{-}22)$$

For $s < \ell$,

$$R \simeq \frac{\rho}{4\pi\ell}\left(\ln\frac{4\ell}{r} - 2 + \ln\frac{4\ell}{s} + \frac{s}{2\ell} - \frac{s^2}{16\ell^2} + \ldots\right). \quad (2\text{-}23)$$

For $s = \ell$,

$$R \simeq \frac{\rho}{4\pi\ell}\left(\ln\frac{4\ell}{r} - 0.18\right). \quad (2\text{-}24)$$

If a number, N, of equal length vertical ground rods (with tops flush with the surface) are separated equally along a straight line and connected together by an insulated conductor at the tops of the rods, the resultant resistance will be somewhat greater than l/N times the resistance of single isolated rod. For N rods of length ℓ at spacing s, the total resistance R_N is given by

$$R_N = \frac{1}{N}\frac{\rho}{2\pi\ell}\left[\ln\frac{4\ell}{r} - 1 + \frac{2\ell}{s}\ln\frac{2N}{\pi}\right] \quad (2\text{-}25)$$

where r is the radius of each rod.

2.6.2.2 Square Array of Vertical Rods.

The resistance of a square array of rods is

$$R_r = \frac{\text{Resistance of one rod}}{\text{Number of rods in array, N}} \times \text{Resistance ratio, K}$$

$$= \frac{R_{\text{one rod}}}{N} K. \quad (2\text{-}26)$$

Figure 2-12 shows the value of K for a square array of N equally spaced, equal length rods at spacings up to 10 times a rod length. The distance from a rod to its closest neighbor in the array is s, and the various curves in Figure 2-12 correspond to values of s, stated as integral multiples of rod length. To illustrate the use of Figure 2-12, consider a 5 by 5 array of 25 rods, each spaced one length from its closest neighbor. From the $s = \ell$ curve, it is found that the resistance ratio is 2.8 for a 25-rod group. The parallel resistance of the 25 rods is therefore 2.8 times one twenty-fifth (l/N) of the resistance that one of the rods would exhibit if isolated.

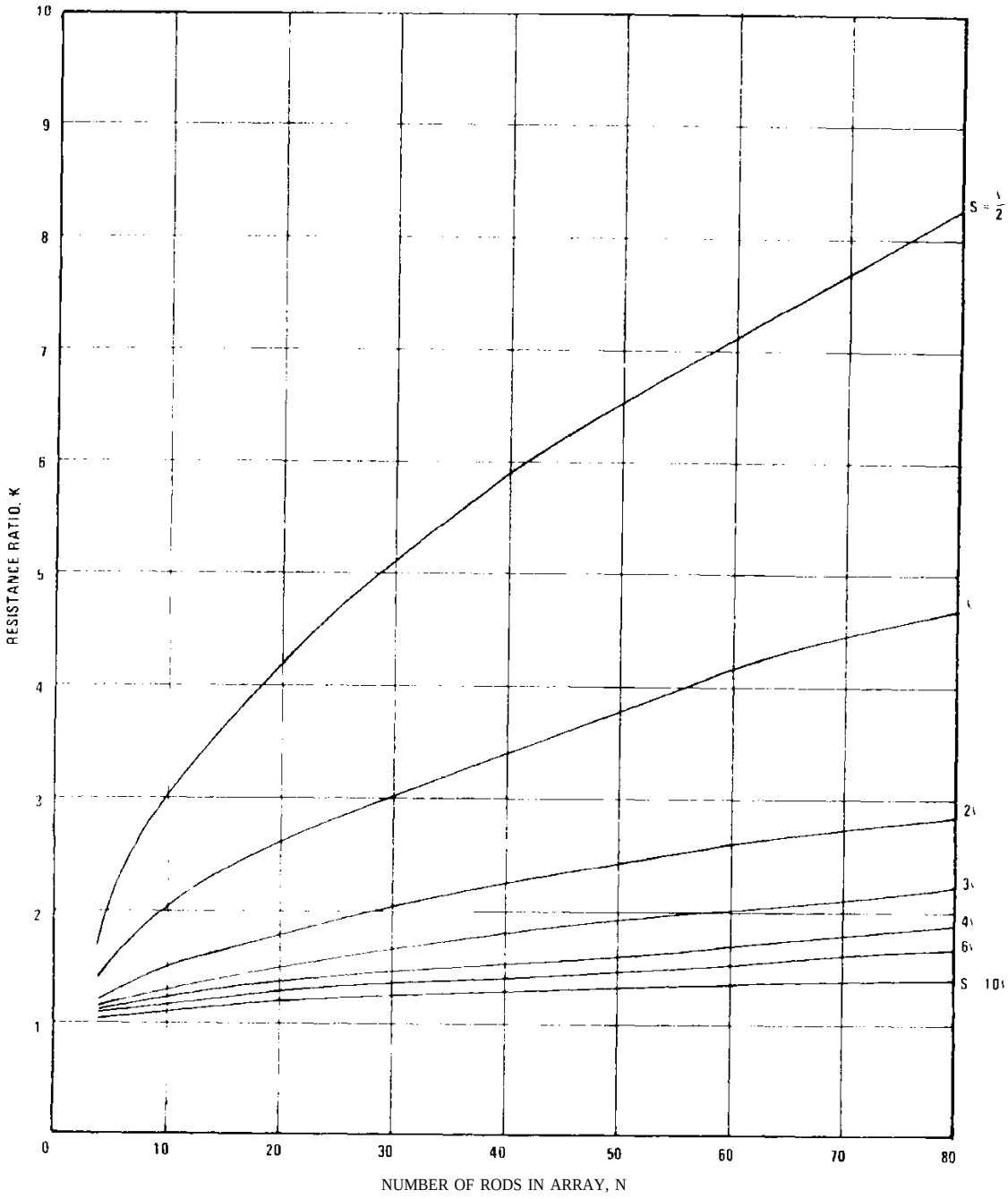

Figure 2-12. Ratio of the Actual Resistance of a Rod Array to the Ideal Resistance of N Rods in Parallel

2.6.2.3 Horizontal Grid (Mesh). Earth electrode subsystems for electric power stations and substations must be designed both to provide low resistance to earth and to minimize voltage gradients at the earth's surface (see Section 2.8.1). A common electrode design for such applications is a grid, or mesh, of horizontal rods or wires connected at each crossing. The resistance to earth for a square or a rectangular grid can be calculated from the following Equation (2-3):

$$R_\omega = \rho \left(\frac{1}{2D_e} + \frac{1}{L_{tot}} \right) \tag{2-27}$$

where

ρ = earth resistivity,

L_{tot} = total length of conductors used,

$\frac{\pi D_e^2}{4}$ = A = area covered by grid, and

D_e = effective diameter of grid.

As an example, consider a square grid that has dimensions of 30.5 m x 30.5 m (100 feet by 100 feet) with conductors spaced 3.05 m (10 feet) apart. Thus there are 100 meshes with a total conductor length of 670 m (2200 feet). The area of the array is 929 square meters (10,000 square feet) with an effective diameter of

$$D_e = \sqrt{\frac{4A}{\pi}}$$

$$= 113 \text{ feet}$$

$$= 3440 \text{ cm}$$

Thus the resistance to earth, by Equation 2-27, is

$$R = \frac{\rho}{2(3440)} + \frac{\rho}{67100} \tag{2-28}$$

$$= 1.45 \times 10^{-4}\rho + 0.15 \times 10^{-4}\rho$$

$$= 1.6 \times 10^{-4}\rho \text{ ohms}$$

2.6.2.4 Vertical Rods Connected by a Grid. The resistance of a bed of vertical rods, interconnected with a wire grid is (2-10)

$$R_t = \frac{R_\omega R_r - R_m^2}{R_\omega + R_r - 2R_m} \tag{2-29}$$

where

R_ω = resistance of wire grid as given by Equation 2-27

L_{tot} = length of conductors in grid

R_r = resistance of bed of rods, as found from Figure 2-12

R_m = mutual resistance which accounts for interaction of rods on grid

$$R_m = \frac{0.73}{L_{tot}} \rho \left[\log \frac{2L_{tot}}{\sqrt{2 r_g h}} - 1 \right], \text{ or} \tag{2-30}$$

$$= \frac{0.73}{L_{tot}} \rho \log \frac{2L_{tot}}{\ell} \tag{2-31}$$

where

r_g = radius of grid wire,

h = depth of grid, if buried, and

ℓ = length of rod, if the grid is near surface.

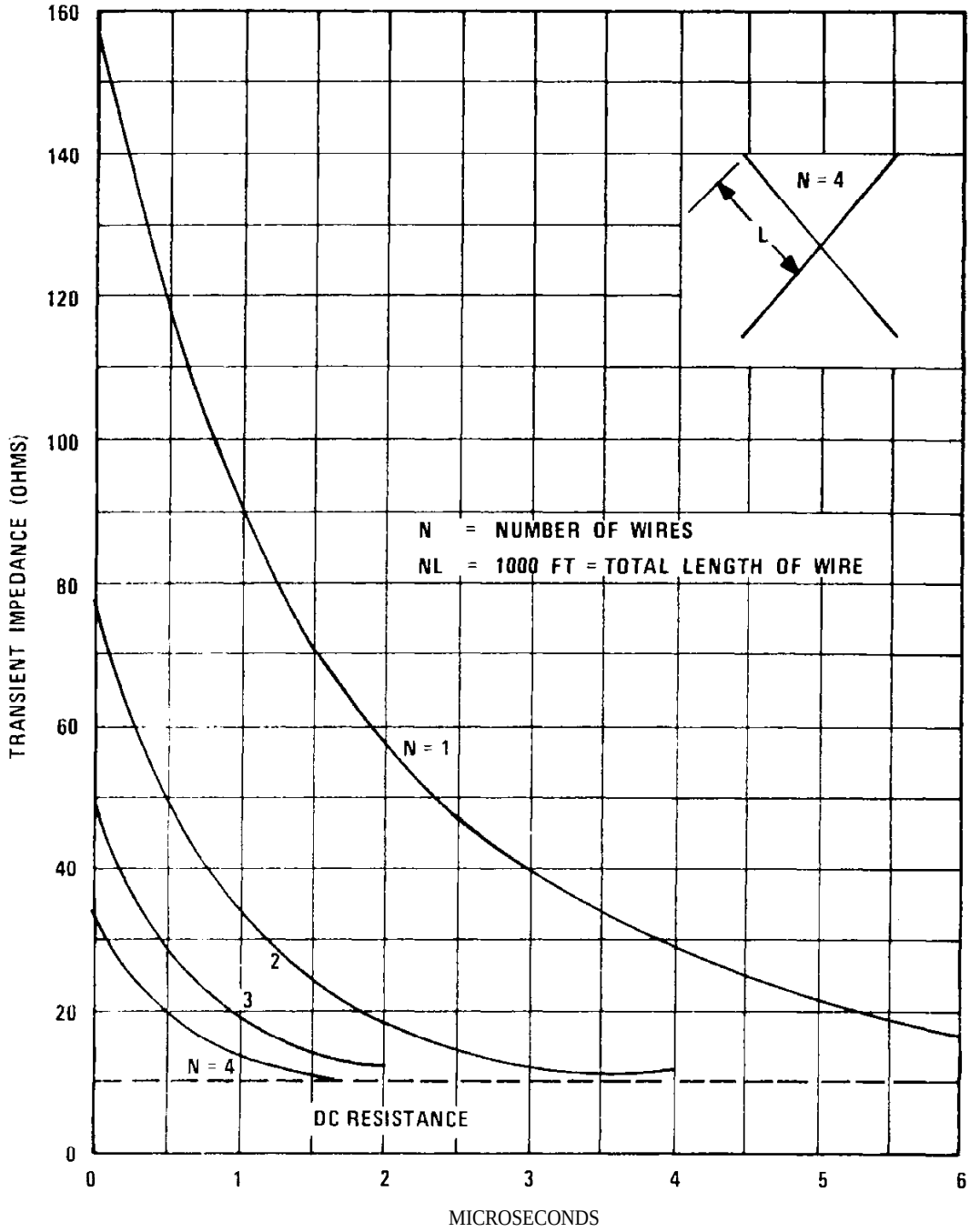

Figure 2-13. Transient Impedance of an Earth Electrode Subsystem as a Function of the Number of Radial Wires

2.6.3 Transient Impedance of Electrodes. The expressions given for electrode resistance assume perfect conductivity for the conductors of an electrode. Such an assumption introduces very little error in the calculation of the electrode dc resistance, but if the electrode must dissipate the impulsive energy of a lightning stroke, its impedance as a function of time must be considered. When a single star electrode, containing 305 meters (1000 feet) of conductor, is subjected to a surge of lightning current, the initial value of its effective impedance is about ten times the dc resistance (2-11). This initial value is termed the surge impedance. As the wave of energy propagates through the electrode system, more and more of the wire of the electrode makes effective contact between the propagating energy and the medium which dissipates the energy. It is clear that a given length of wire will couple lightning energy more efficiently into the earth if the electrode is in the form of a star than if it were a single conductor. This is illustrated in Figure 2-13 where it is indicated that as the energy surges down an electrode (at a velocity in the neighborhood of 100 meters (333 feet) per microsecond), the transient impedance of the electrode decreases and approaches the dc resistance value.

2.6.4 Effects of Nonhomogeneous (Layered) Earth. The previous derivations assumed homogeneous earth. A qualitative understanding of the effects of non-uniform earth resistivity can be deduced from Figure 2-14 which illustrates the electric equipotential surfaces and current flow in layered earth when the earthing electrode is a small hemisphere. The lines radiating outward from the earth electrode indicate the flow of current. Not surprisingly, if the resistivity of the deeper layer is high, relative to the upper layer, nearly all of the current is confined to the upper layer of earth.

2.6.4.1 Hemispherical Electrode. An approximate expression (2-3) for the resistance to earth of a small hemispherical electrode in layered earth is

$$R = \frac{\rho_1}{2\pi r} + 0.366\,\frac{\rho_1}{h}\,\log\,\frac{\rho_1 + \rho_2}{2\rho_1} \tag{2-32}$$

where

r = hemisphere radius (assumed less than h),

h = thickness of superficial layer,

ρ_1 = resistivity of superficial layer,

ρ_2 = resistivity of deep layer.

An interesting example is the case of a superficial layer of low resistivity soil ($\rho = 10^3$ ohm-cm) over granite ($\rho = 10^6$ ohm-cm):

$$R = \frac{10^3}{6.3r} + \frac{366}{h}\,\log\left(\frac{1}{2} + 500\right), \tag{2-33}$$

$$= \frac{160}{r}\left[1 + \frac{6.2}{h/r}\right],$$

where r and h are measured in centimeters. If h < 6.2 r, the resistance to earth will be greatly influenced by the resistivity of the granite underlayment; if h > 6.2 r, the resistance approaches that for homogeneous earth with resistivity, ρ_1.

2.6.4.2 Vertical Rod.

When a vertical rod is driven through a high resistivity superficial (upper) layer into a lower resistivity subsoil, an adjustment can be made to the resistance to earth expression for homogeneous soil by substituting a reduced "effective length" of the ground rod. Letting ℓ' be the effective length (2-3)

$$\ell' = \ell - h\left(1 - \frac{\rho_2}{\rho_1}\right) \tag{2-34}$$

where

ℓ = physical length of rod,

ρ_1 = resistivity of upper layer,

ρ_2 = resistivity of subsoil, and

h = depth of upper layer.

Note that if $\rho_1 \gg \rho_2$, the effective length of the rod is reduced to ℓ - h. When the subsoil has a higher resistivity than the top layer of soil ($\rho_2 > \rho_1$), the current discharged through a slender vertical rod with length equal to the thickness of the superficial layer of soil will tend to remain in the superficial layer of soil. The "mean path" of the superficial layer current, that is the radial distance at which half the discharge current has entered the deeper soil, is approximately (2-3)

$$X = \frac{\rho_2}{\rho_1} h \tag{2-35}$$

If the dimensions of the earth electrode subsystem are large compared to the thickness of the upper stratum, the upper layer becomes insignificant and the resistance to earth can be computed as through the soil were homogeneous with resistivity equal to ρ_2, the resistivity of the subsoil.

2.6.4.3 Grids.

A useful approximation for the resistance-to-earth of a horizontally extensive electrode system is given by Equation 2-27.

If the soil has a superficial layer with resistivity ρ_1 and a subsoil with resistivity ρ_2, the resistance to earth of a grid in the superficial layer is given by (2-3)

$$R \simeq \frac{\rho_2}{2D_e} + \frac{\rho_1}{L_{tot}} \tag{2-36}$$

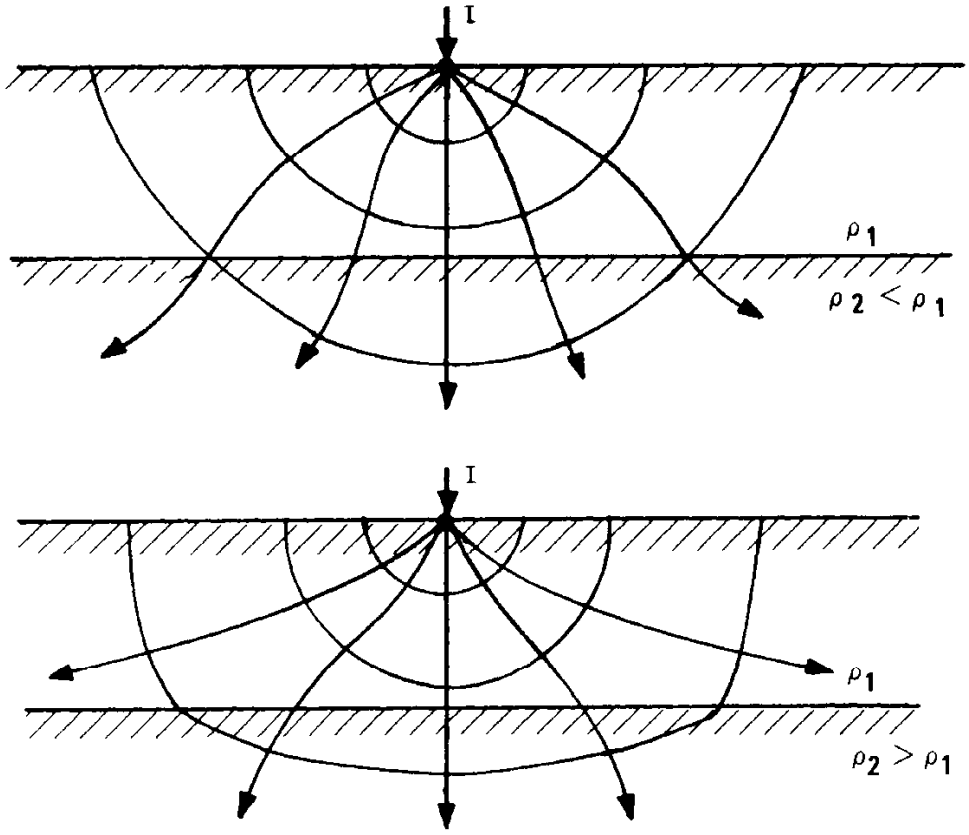

Figure 2-14. Current Distribution in Nonuniform Soil

when $\rho_2 \gg \rho_1 \left(\frac{2D_e}{L_{tot}}\right)$, the earthing resistance is approximately

$$R \simeq \frac{\rho_2}{2D_e} \tag{2-37}$$

and when $\rho_1 \gg \rho_2 \left(\frac{L_{tot}}{2D_e}\right)$, it is approximately

$$R \simeq \frac{\rho_1}{L_{tot}} \tag{2-38}$$

If, for example, the diameter, D_e, of the grid equals 500 meters, the resistivity, ρ_1, of the superficial layer equals 10,000 ohm-meters, the resistivity, ρ_2, of the subsoil equals zoo ohm-meters, and the length, L_{tot}, of the conductors in the grid equals 4,000 meters, then

$$R = 2.7 \text{ ohms}$$

Burying the grid within the lower resistivity subsoil would reduce the resistance-to-earth to about 0.4 ohms. Conversely, if the ρ_2 = 10,000 ohm-meters, and ρ_1 = 200 ohm-meters, then

$$R = 10 \text{ ohms}$$

regardless of the depth of the grid.

2.7 MEASUREMENT OF RESISTANCE-TO-EARTH OF ELECTRODES.

2.7.1 Introduction. The calculated resistance of a given electrode system is based on a variety of assumptions and approximations that may or may not be met in the final installation. Because of unexpected and uncontrolled conditions which may arise during construction, or develop afterward, the resistance of the installed electrode must be measured to see if the design criteria are met. In an existing facility, the resistance of the electrode system must be measured to see if modifications or upgrading is necessary. Two commonly used methods for measuring the resistance to earth of an electrode are the triangulation method and the fall-of-potential method.

2.7.2 Fall-of-Potential Method. This technique involves the passing of a known current between the electrode under test and a current probe, C_2, as shown in Figure 2-15(a). The drop in voltage between the earth electrode and the potential electrode, P_2, located between the current electrodes is then measured; the ratio of the voltage drop to the known current gives a measure of the resistance. (By using a voltage measuring device - a null instrument or one having a high impedance - the contact resistance of the potential electrode will have no appreciable effect on the accuracy of the measure merit.) Several resistance measurements are taken by moving the potential probe, P_2, from the position of the earth electrode, along a straight line to the Current probe, C_2, which is left in position. The data obtained is then plotted as resistance versus distance from the earth electrode as illustrated in Figure 2-15(b). This is the test method recoin mended for measurement of single rod or multi-rod earth electrode subsystems.

2.7.2.1 Probe Spacing. Current flow into the earth (see Figure 2-8) surrounding an electrode produces shells of equipotential around the electrode. A family of equipotential shells exists around both the electrode under test and the current reference probe, C_2. The sphere of influence of these shells is proportional to the size of each respective electrode. (See, for example, Section 2.6.1.1.) The potential probe, P_2, in Figure 2-15 provides an indication of the net voltage developed at the earth's surface by the combined effect of these two families of shells. If the electrode under test and the current reference probe are so close that their equipotential shells overlap, the surface voltage variation as measured by P_2 will vary as shown in Figure 2-16(a). Since the current flowing between the electrodes is constant for each voltage measurement, the resistance curve will have the same shape as the voltage curve. For close electrode spacings, the continuously varying resistance curve does not permit an accurate determination of resistance to be made.

By locating the current reference probe, C_2, far enough away from the electrode under test to ensure that the families of equipotential shells do not overlap, a voltage curve like that shown in Figure 2-16(b) will be obtained to produce the type of resistance curve shown in Figure 2-15.

When the distance, D, between the electrode under test and the current reference probe is very large compared to the dimensions of the earth electrode subsystem under test, the latter can be approximated as a hemisphere and interaction between the two electrodes is negligible. When these assumptions are met, the potential at a point at distance x from the electrode under test is:

$$U_x = \frac{\rho I}{2\pi x} - \frac{\rho I}{2\pi (D-x)} = \frac{\rho I}{2\pi}\left(\frac{1}{x} - \frac{1}{D-x}\right) \tag{2-39}$$

where ρ is the average soil resistivity; the minus sign indicates that the current, I, flows into C_1, and out from C_2.

Assume that the electrode under test is equivalent to a hemisphere with radius, r. At the surface of this hemisphere, the potential is found by letting x = r:

$$U_o = \frac{\rho I}{2\pi}\left(\frac{1}{r} - \frac{1}{D-r}\right) \tag{2-40}$$

The potential difference between C_1 and P_2 is the voltage that is being measured and is:

$$V_o^x = \left(U_o - U_x\right) \tag{2-41}$$

$$= \frac{\rho I}{2\pi}\left(\frac{1}{r} - \frac{1}{D-r} - \frac{1}{x} + \frac{1}{D-x}\right)$$

when x = r

$$V_o^x = 0$$

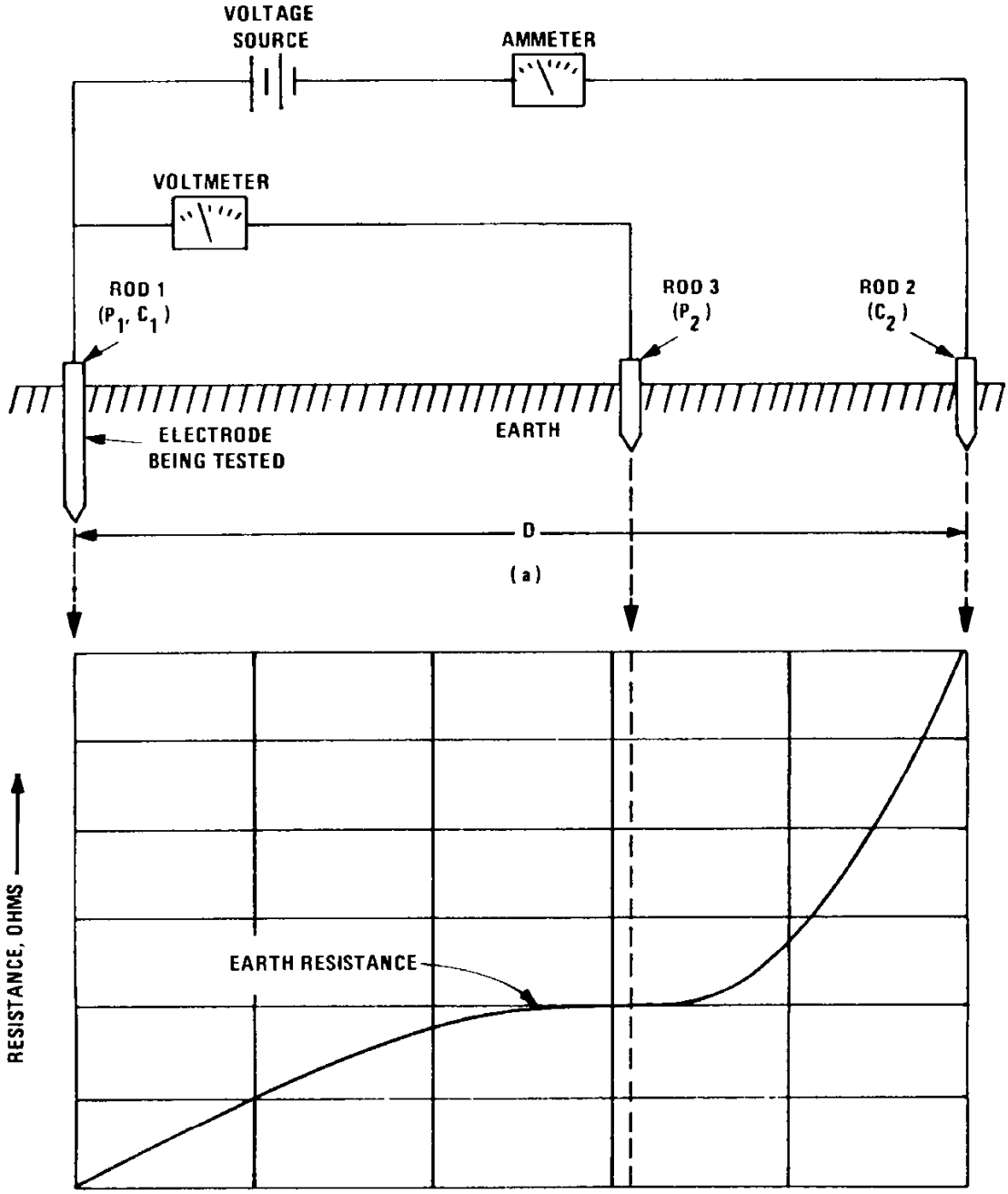

POTENTIAL PROBE POSITIONS

(b)

Figure 2-15. Fall-of-Potential Method for pleasuring the Resistance of Earth Electrodes

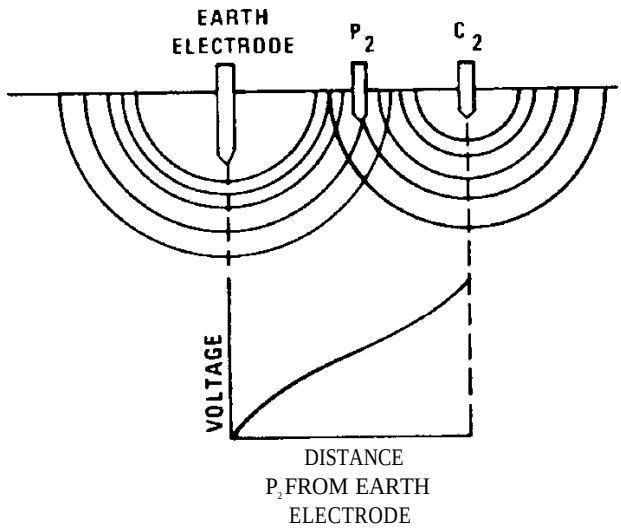

(a) CLOSELY SPACED ELECTRODES

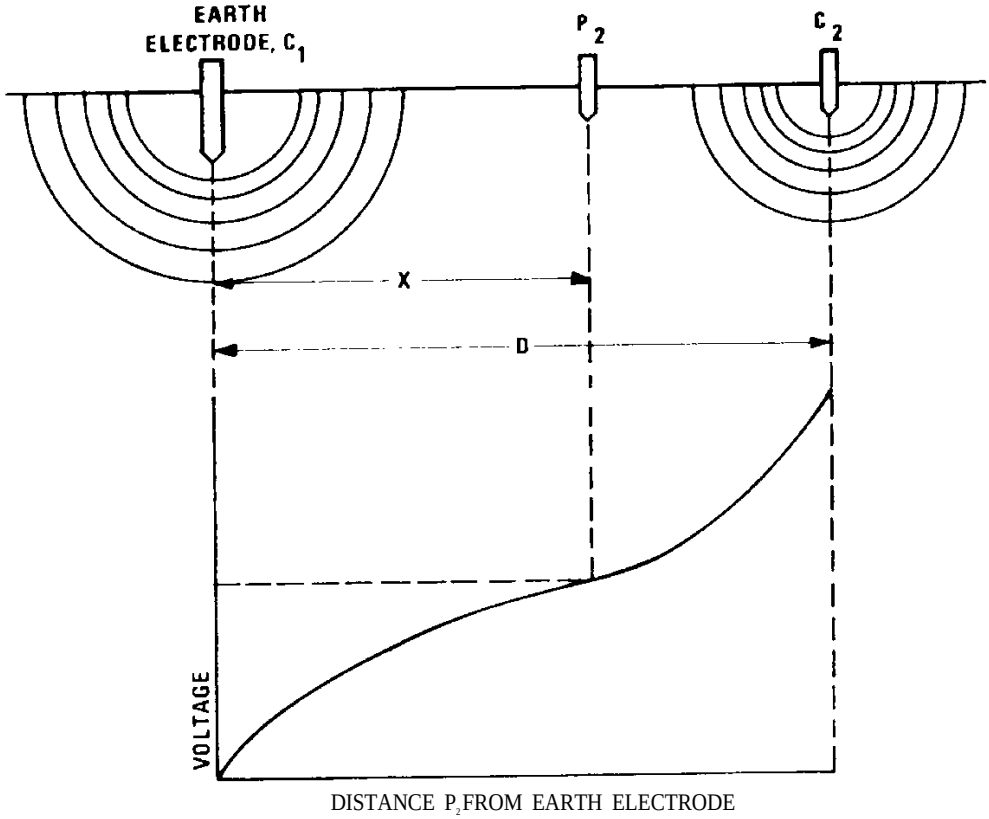

(b) WIDELY SPACED ELECTRODES

Figure 2-16. Effect of Electrode Spacing on Voltage Measurement

If the r_2 is the radius of the hemisphere that is equivalent to the current probe, C_2, and r is the equivalent radius of the electrode under test, it is seen that when $x = D - r_2$

$$V_o^x = \frac{\rho I}{2\pi}\left(\frac{1}{r} - \frac{1}{D-r} - \frac{1}{D-r_2} + \frac{1}{r_2}\right) \tag{2-42}$$

If $D >> r_2$ or r

$$V_o^x = \frac{\rho I}{2\pi}\left(\frac{1}{r} + \frac{1}{r_2}\right) \tag{2-43}$$

But the true value of resistance corresponds to

$$V_o^x = \frac{\rho I}{2\pi r} \tag{2-44}$$

which is found when $0 < x < D - r_2$.

In order for the measurement of V_o^x to yield the correct value of resistance to earth; it can be seen that the error term in Equation 2-41 must be zero, i.e.,

$$\frac{1}{D-x} - \frac{1}{x} - \frac{1}{D-r} = 0 \tag{2-45}$$

$$x(D-r) - (D-r)(D-x) - x(D-x) = 0$$

$$Dx\left(1 - \frac{r}{D}\right) - D(D-x)\left(1 - \frac{r}{D}\right) - x(D-x) = 0.$$

Again if D >> r

$$X^2 + DX - D^2 = 0 \tag{2-46}$$

which can be solved as follows:

$$x = -\frac{D}{2} \pm \frac{1}{2}\sqrt{D^2 + 4D^2} \tag{2-47}$$

$$= \frac{D}{2}\left(\sqrt{5} - 1\right)$$

$$= \frac{D}{2}\left(2.236 - 1\right)$$

$$= \frac{D}{2}\left(1.236\right)$$

$$= 0.618D$$

Thus the true value of resistance to earth corresponds to the ratio of the potential difference to the measured current when x is 62 percent of the distance, D, from the electrode under test to the current probe, C_2. It is important to remember that D is measured from the center of the electrode under test to the center of the current probe and that D is large relative to the radius of the electrode under test.

Figure 2-17 shows an example of data taken with the fall-of-potential method. The correct resistance of 13 ohms corresponds to the potential probe location of 27.4 meters (90 feet) which is 62 percent of the distance to the current probe.

Resistance of the electrode under test with respect to infinity (the true definition of the resistance to earth) is

$$R = \frac{U_o}{I} = \frac{\rho}{2\pi}\left(\frac{1}{r} - \frac{1}{D-r}\right) \tag{2-48}$$

Thus any value of D less than infinity causes the measured resistance to be in error. The error can be estimated by observing that

$$R = \frac{\rho}{2\pi r}\left(1 - \frac{r}{D-r}\right)$$

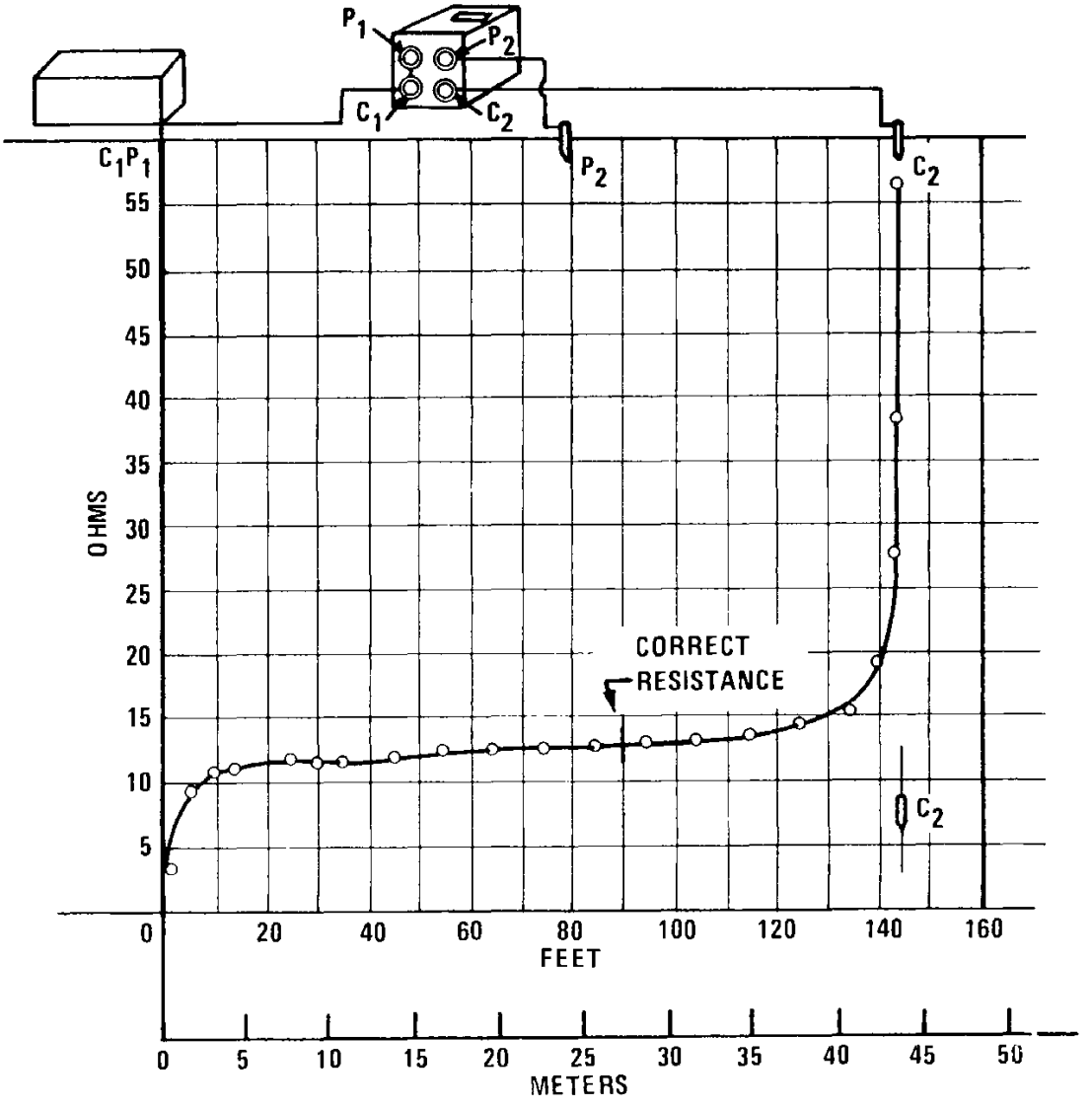

Figure 2-17. Resistance Variations as Function of Potential Probe Position in Fall-of-Potential Method (2-12)

Remembering that $$R = \frac{\rho}{2\pi r}$$

is the true resistance, it is evident that if D = 5r, the error will be 25 percent, if D = 11r, the error is 10 percent; if D = 26r, the error is 4 percent, etc.

The equivalent radius of a large electrode system can be determined from

$$r_e = \sqrt{\frac{A}{\pi}} \tag{2-49}$$

where

A = the area covered by the system.

Consider a rectangular grid 10 meters by 10 meters. Its effective radius is

$$r_e = \sqrt{\frac{10^2}{\pi}} = 5.64 \text{ meters.}$$

For an accuracy of 90 percent, the probe C_2 should be positioned at

D = 11 x 5.64

= 62 meters or 203 feet away.

A conservative estimate which leads to improved accuracy of the effective radius is that it is equal to one half the longest diagonal dimension (D_d) of the array. Thus for an accuracy of 90 percent, the location for C_2 should be

$$11 \times (0.5\ D_d) \text{ or } 5.5\ D_d,$$

which is the basis for the frequently quoted rule of thumb of 5 times the longest diagonal of the area of the electrode under test. Table 2-6 gives the percentage accuracies obtained at probe locations up to 50 times the longest diagonal.

2.7.2.2 Extensive Electrode Subsystems (2-13). When the earth electrode subsystem is extensive, it is frequently difficult to locate the current probe at a distance of even five times the largest dimension and measurements of resistance to earth are subject to large errors. In addition, a connection to the electrical center of the subsystem may not be possible. Figure 2-18 shows a set of resistance curves for an extensive earth electrode subsystem obtained at current probe spacings of up to 304 meters (1000 feet). Each curve corresponds to a particular distance, C_k, of the current probe from the point of connection to the earth electrode subsystem. The potential probe spacing, P, is the independent variable.

Table 2-6

Resistance Accuracy Versus Probe C_2 Spacing

Accuracy (percent)	Probe Spacing
90	5 x diagonal under test
95	10 x diagonal under test
98	25 x diagonal under test
99	50 x diagonal under test

On each curve the points corresponding to 62 percent of the distance to the current probe have been connected. It is evident that as the current probe location is moved farther out, the 62 percent value is decreasing. The true value of resistance can be estimated by extrapolating the connecting line to its asymptotic value. Because none of the curves in Figure 2-18 level out, even the largest spacing of the current probe is evidently too small for a direct reading of the resistance. Basic assumptions for the fall-of-potential measurement are that (1) the electrode to be measured can be approximated as a hemisphere and (2) the connection to the earth electrode is made at its electrical center. Since the location of the electrical center may not be known or may be inaccessible, the connection is usually made at a convenient point at a distance X (Figure 2-19) from the electrical center, D. The distance from the true center of the electrode to the current probe (assuming the measurements are made on a radial from the electrical center) is $C_k + X$. The use of 62 percent point on the curves of Figure 2-18 to determine the resistance of the earth electrode should in reality correspond to a position of the potential probe that is 0.62 ($C_k + X$) from the true center (D). This means that the distance, P_t, from the point of actual connection (0) to the system to the location at which the correct resistance to earth exists will be

$$P_t = 0.62\ (C_k + X) - X \qquad (2\text{-}50)$$

$$= 0.62\ C_k - 0.38\ X$$

where

P_t = Distance of potential probe from point of connection to electrode when the measured resistance is the true value of resistance-to-earth for the electrode,

C_k = Current probe distance from point of connection, for the kth set of probe measurements, and

x = Distance from electrical center of electrode system to point of connection to the electrode system.

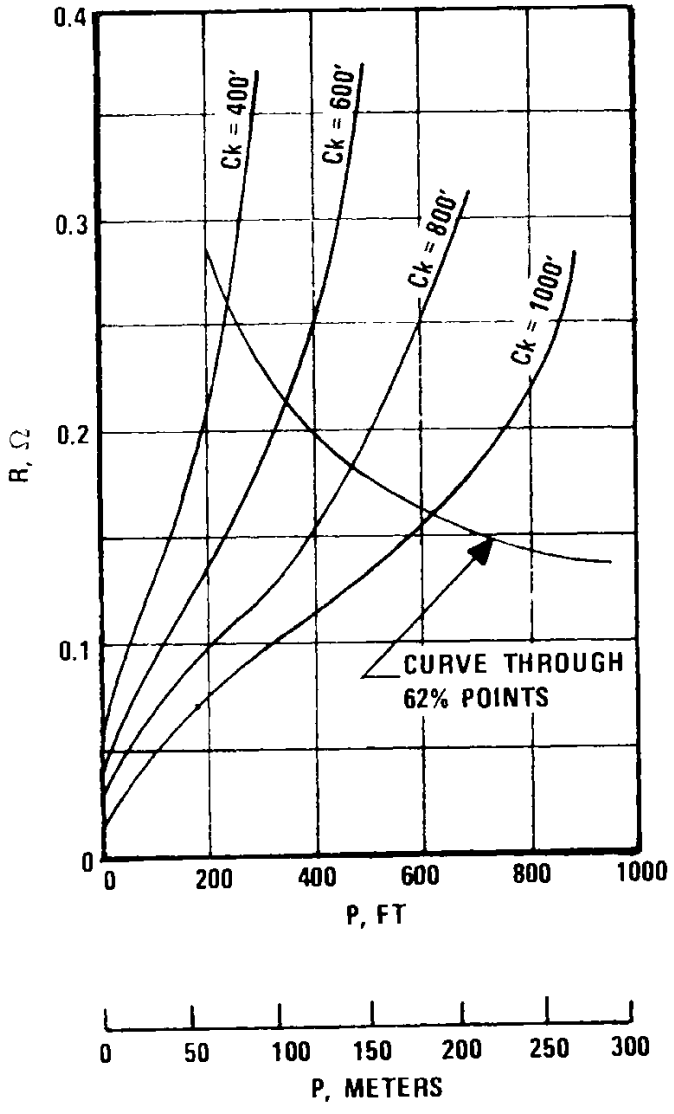

Figure 2-18. Earth Resistance Curves for a Large Electrode Subsystem

To determine the true resistance of the earth electrode, X is allowed to assume convenient increments from zero to C_k. For each C_k, the value of measured resistance corresponding to the resultant P_t (calculated with Equation 2-50) is read from the curves of Figure 2-18 and plotted against X. For example, if X and C_k both equal 305 M (1000 feet), considering only the right hand curve in Figure 2-18, the value of P_t is 240, and R is 0.08 ohms. Next let X be 244 m (800 feet). The corresponding value of P_t is 96 m (316 feet) and r is 0.1 ohms. In this manner, estimates of the 62 percent values can be taken from Figure 2-18 and replotted as "true" resistance versus X, as shown in Figure 2-20. At the region of intersection of the curves in Figure 2-20, the value of X = 122 m (400 feet) corresponds to the electrical center of the electrode, and the corresponding value of resistance (0.13 ohms) is the true value of resistance-to-earth of the electrode system. It is recommended that the distance to the current probe, "C", from the point of connection to the earth electrode, "O", (see Figure 2-19) be between one and two times the length of the longest side of the electrode system. Furthermore, failure to obtain a well defined region of intersection of the curves can result if the probe measurements are not taken on a radial from the electrical center, in that case, new probe directions will be required.

2.7.2.3 Test Equipments. Test equipments are presently available which will permit the accurate measurement of ground resistances of earth electrode subsystems from 0.01 to 20,000 ohms and above. Most equipments used in conducting these measurements are designed to utilize ground test currents other than dc or 60 Hz to avoid or eliminate the effects of stray ac or dc currents in the earth.

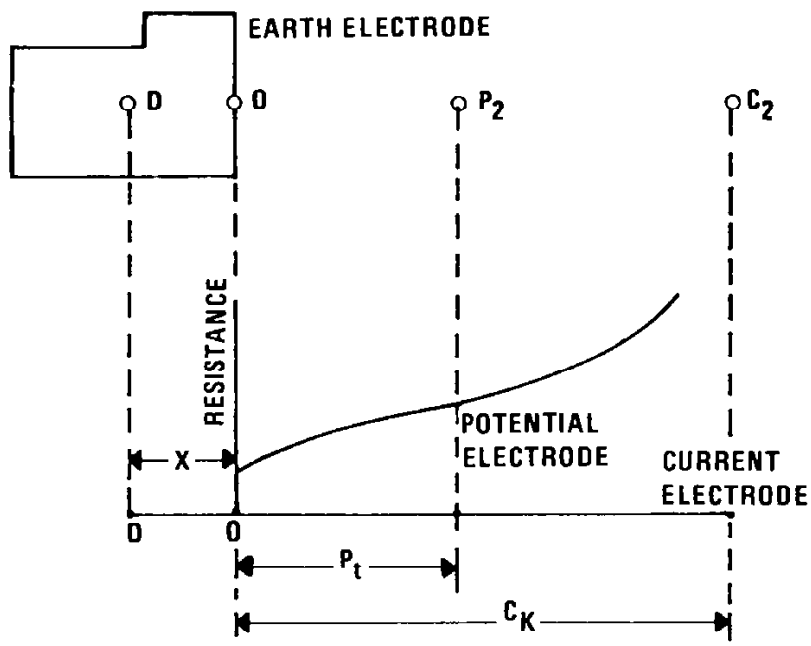

Figure 2-19. Earth Resistance Curve Applicable to Large Earth Electrode Subsystems

2.7.3 Three-Point (Triangulation) Method. In this method, illustrated in Figure 2-21 the resistances of the electrode under test (Rx) and the auxiliary electrodes (R_a, R_b) are measured two at a time. The unknown resistance is then computed from the formula.

$$R_x = \frac{\left(R_x + R_a\right) + \left(R_x + R_b\right) - \left(R_a + R_b\right)}{2}, \qquad (2\text{-}51)$$

where the terms in the parenthesis are the following measured resistances:

$$\left(R_x + R_a\right) = \frac{V_x^a}{I_x} \qquad (2\text{-}52)$$

= voltage drop from test electrode, X, to electrode A, divided by current entering test electrode, X,

$$\left(R_x + R_b\right) = \frac{V_x^b}{I_x} \qquad (2\text{-}53)$$

= voltage drop from test electrode to electrode B, divided by current into test electrode, X,

$$\left(R_a + R_b\right) = \frac{V_a^b}{I_a} \qquad (2\text{-}54)$$

= voltage drop from electrode A to electrode B, divided by current entering electrode A.

For best accuracy, it is important to use auxiliary electrodes with resistances of the same order of magnitude as the unknown. The series resistances may be measured either with a bridge or with a voltmeter and ammeter. Either alternating or direct current may be used as the source of test current. For the three-point measurement, the electrodes must be at some distance from each other; otherwise absurdities such as zero or even negative resistances may arise in the calculations. In measuring a single 3 meter (I0-foot) driven ground rod, the distance between the three separate ground electrodes should be at least 5 meters (15 feet), with a preferable spacing of 8 meters (25 feet) or more. For larger area grounds, which are presumable of lower resistances, spacing on the order of the dimensions of the ground field is required as a minimum. This method is most effective for measurement of single rods and is not recommended for multi-rod earth electrode subsystems.

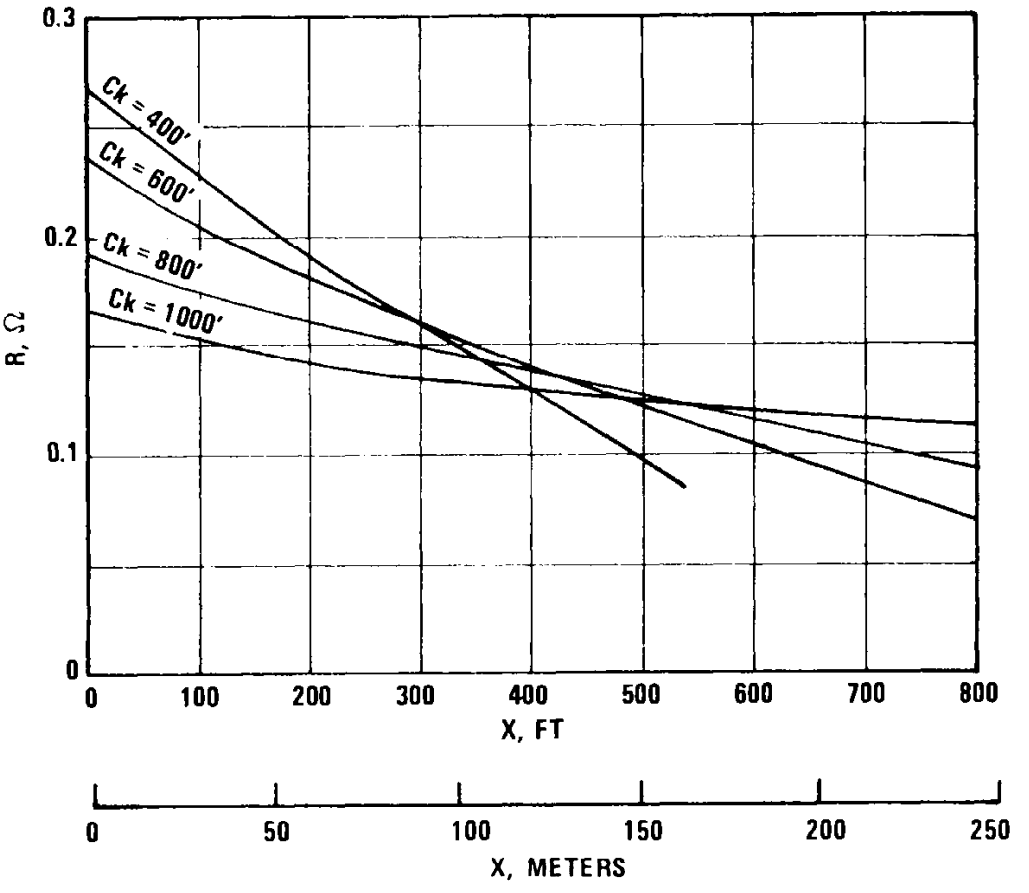

Figure 2-20. Intersection Curves for Figure 2-18

2.8 OTHER CONSIDERATIONS.

2.8.1 Surface Voltages Above Earth Electrodes. Very large currents can be conducted into earth electrodes whenever power line faults or lightning strikes occur. As a result, there is a substantial voltage developed at the surface of the earth near the electrode; this voltage varies significantly with distance from the electrode connection point. The voltage difference between two points about three feet apart on the surface is the "step voltage", i.e., it is the voltage level between the feet of a person standing or walking on the surface.

2.8.1.1 Step Voltage Safety Limit. The maximum safe step voltage depends upon the duration of the individual's exposure to the voltage and upon the resistivity of the earth at the surface. The maximum safe step voltage for a shock duration of from 0.03 to 3.0 seconds has been expressed (2-3) as

$$v_{step\ (safe)} = \frac{165 + \rho_S}{\sqrt{t}} \qquad (2\text{-}55)$$

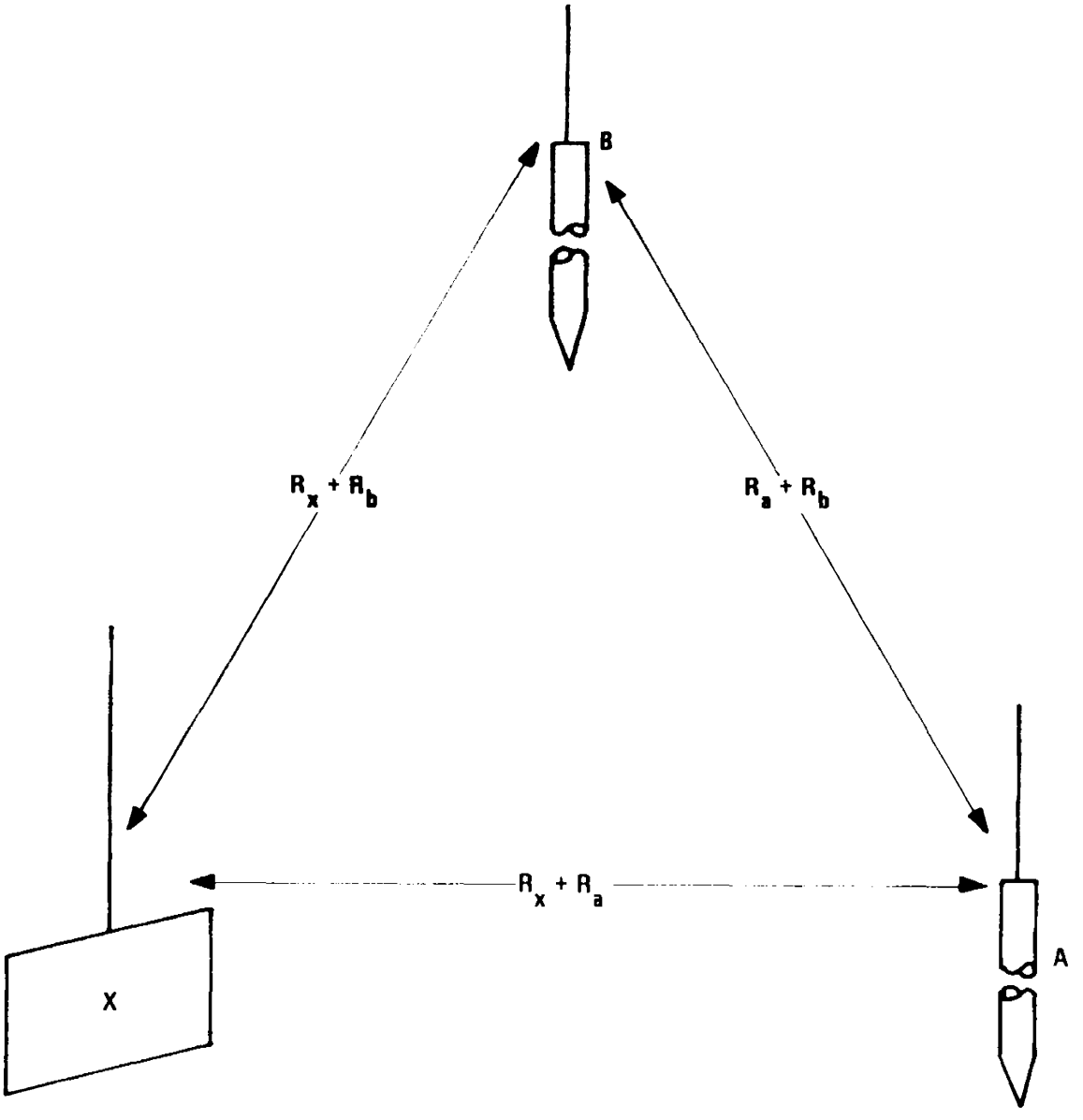

Figure 2-21. Triangulation Method of Measuring the Resistance of an Earth Electrode

where

ρ_s == surface earth resistivity, (ohm - meters),

= 10 for a minimum value,

t = duration of shock (see).

For a 30 millisecond or shorter duration, the maximum safe step voltage is 1000 volts, and for durations greater than 3 seconds, it is 100 volts.

2.8.1.2 Step Voltages for Practical Electrodes. The expressions for step voltage estimates in homogeneous soil for both flush and buried vertical rod electrodes and for buried grid electrodes are given in the following paragraphs. It should be noted that step voltages depend upon electrode geometry as well as upon earth resistivity and current magnitude.

2.8.1.2.1 Flush Vertical Rod. The potential on the earth at a distance x from the top of a single, isolated flush-driven vertical rod is (2-3)

$$V_x = \frac{0.366\ \rho I_o}{\ell} \log \left(\frac{\ell}{x} + \sqrt{1 + \frac{\ell^2}{x^2}} \right), \tag{2-56}$$

and the potential of the rod itself is

$$V_o = \frac{0.366\ \rho I_o}{\ell} \log \frac{3\ell}{d}. \tag{2-57}$$

The step potential at the ground rod (where p is equal to a pace, or step, length from the rod) is therefore

$$V_o - V_p = \frac{0.366\ \rho I_o}{\ell} \left[\log \frac{3\ell}{d} - \log \left(\frac{\ell}{p} + \sqrt{1 + \frac{\ell^2}{p^2}} \right) \right], \tag{2-58}$$

$$= \frac{0.366\ \rho I_o}{\ell} \log \left[\frac{3\ p}{d \left(1 + \sqrt{\frac{p^2}{\ell^2} + 1} \right)} \right].$$

When the step length is much less than the rod length, i.e., when $p << \ell$, the step voltage can be approximated as

$$V_o - V_p \simeq \frac{0.366\ \rho I_o}{\ell} \log\left(\frac{3p}{2d}\right) \tag{2-59}$$

The step potential can be expressed as a fraction of the ground rod potential as follows:

$$\frac{V_o - V_p}{V_o} = \frac{\log\left[\frac{3p}{d\left(1 + \sqrt{\frac{p^2}{\ell^2} + 1}\right)}\right]}{\log \frac{3\ell}{d}} \tag{2-60}$$

The fractional step voltages for ground rods of various length are given in Table 2-7. For this Table, rod diameter is assumed to be one inch (2.54 cm) and the pace length is assumed to be three feet (0.91 m).

Table 2-7

Step Voltages for a Buried Vertical Ground Rod

Rod Length (Ft)	Ratio of Step Voltage To Electrode Potential
5	0.75
10	0.68
20	0.61
50	0.53
100	0.48

The step voltage near the 10-foot by l-inch (3.05 m x 2.54 cm) rod in 1000 ohm-cm soil is about 68 percent of the voltage between the rod and a point approaching an infinite distance away. Step voltage near a ground rod will be between 80 percent of the rod potential (for very short rods) and 50 percent (for very long rods).

The step voltage on the surface of the earth near an isolated 10-foot by l-inch (3.05 m x 2.54 cm) ground rod (ρ = 1000 ohm-cm) carrying a lightning current of 20,000 amps could be fatal since the step voltage would be

$$v_o - v_p = \frac{(0.366)\ (1000)\ (20{,}000)}{(10)\ (12)\ (2.54)} \tag{2-61}$$

$$\times \left[\log 360 - \log\left(\frac{10}{3} + \sqrt{1 + \frac{100}{9}}\right)\right],$$

$$= \frac{7.32\times10^6}{3.05\times10^2}\ [2.556-0.833]$$

$$= (2.4\times10^4)\ (1.723)$$

$$= 41{,}352 \text{ volts},$$

which is 41 times higher than the safe step voltage derived above.

The resistance of the 10-foot by l-inch (3.05 m x 2.54 cm) rod in 1000 ohm-cm soil is

$$R = \frac{0.366\ \rho}{\ell} \log \frac{3\ell}{d}\ , \tag{2-62}$$

$$= \frac{(0.\ 366)\ (10^3)}{(10)\ (12)\ (2.54)} \log 36,$$

$$= 1.2 \log 360,$$

$$= (1.2)\ (2.556),$$

$$= 3.1 \text{ ohms}.$$

Higher values of earth resistivity would cause the step voltage near the rod to be even higher than the calculated 41,400 volts. For a three second duration shock condition, the requirement that the step voltage not exceed 100 volts means that the single 10-foot by l-inch (3.05 m x 2.54 cm) rod would produce an unsafe step voltage with a fault current greater than about 50 amperes, even in low resistivity (1000 ohm-cm) soil.

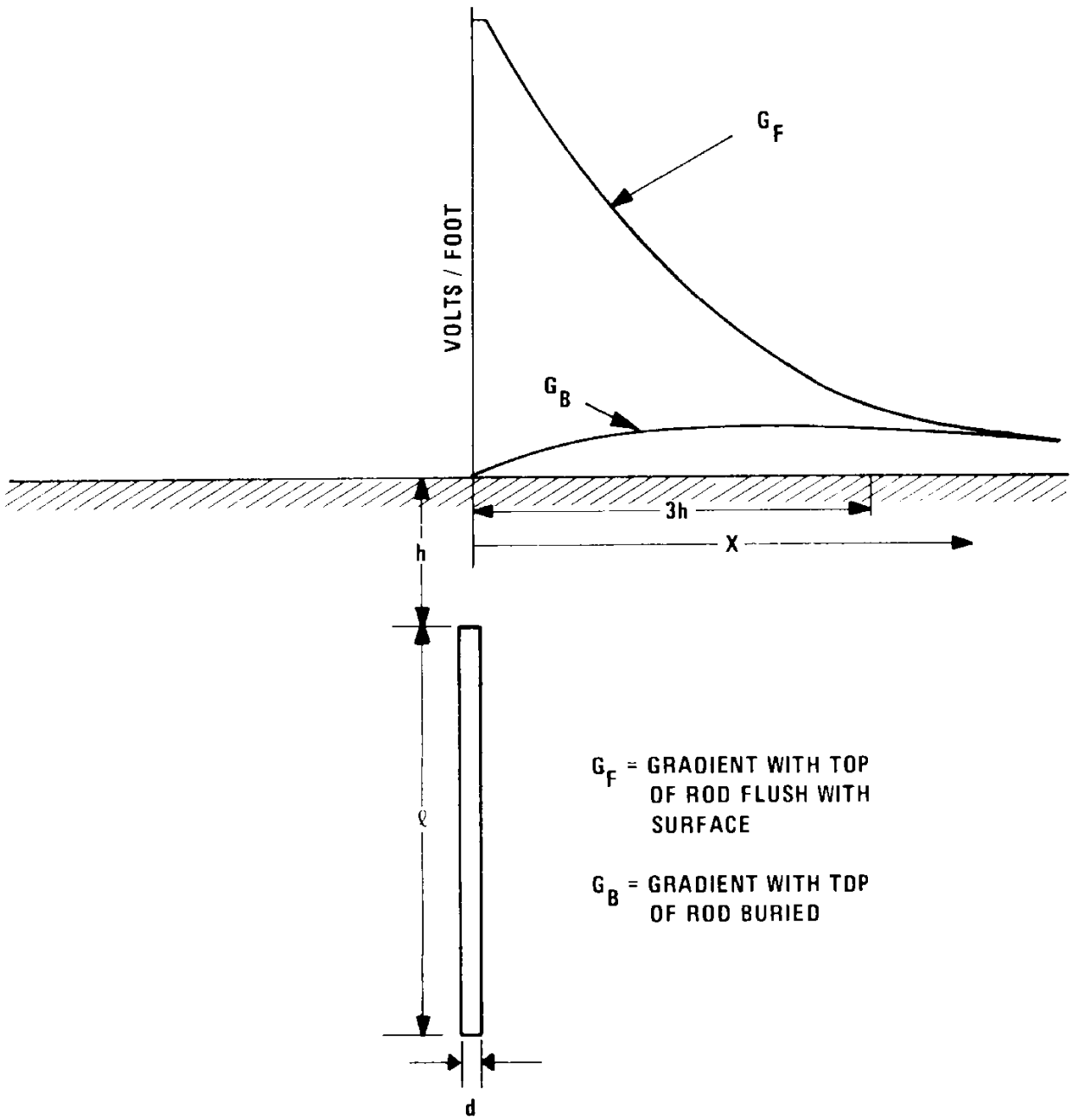

Figure 2-22. Variation of Surface Potential Produced by a Current Flowing Into an Isolated Ground Rod

2.8.1.2.2 Buried Vertical Rod. If the single isolated vertical rod is driven so that the top of the rod is below the surface, the maximum step voltage on the surface of the earth is reduced. Figure 2-22 shows the surface voltage variation for a flush driven rod compared with that for a rod with its top below the surface. Maximum gradient for the flush driven rod is at the vicinity of the rod. Maxi mum gradient for the rod sunk into the earth to a depth of h feet occurs at a distance of 3 h to 4 h from the rod (2-3). The step voltage for the rod driven so that its top is h feet below the surface is:

$$V_x - V_{x+p} = \frac{0.366\rho I_o}{\ell} \log \left\{ \frac{\left[\sqrt{(h+\ell)^2 + x^2} + h + \ell\right]\left[\sqrt{h^2 + (x+p)^2} + h\right]}{\left[\sqrt{(h+\ell)^2 + (x+p)^2} + h + \ell\right]\left[\sqrt{h^2 + x^2} + h\right]} \right\} \quad (2\text{-}63)$$

For

$\rho = 10^3$ ohm-cm,

$I_o =$ 20,000 amperes,

$\ell =$ 10 feet (3.05 m),

$x =$ 3h feet, and

$p =$ 3 feet (0.91 m)

$$V_x - V_{x+p} = 2.4 \times 10^4 \log \left\{ \frac{\left[\sqrt{(h+10)^2 + (3h)^2} + h + 10\right]\left[\sqrt{h^2 + (3h+3)^2} + h\right]}{\left[\sqrt{(h+10)^2 + (3h+3)^2} + h + 10\right]\left[\sqrt{h^2 + (3h)^2} + h\right]} \right\} \quad (2\text{-}64)$$

If h = 3 feet, the maximum step voltage is approximately

$$\begin{aligned} V_x - V_{x+p} &= 2.4 \times 10^4 \log \left\{ \frac{(28.81)\ (15.37)}{(30.69)\ (12.49)} \right\} \\ &= 2.4 \times 10^4 \log 1.15 \\ &= (2.4 \times 10^4)\ 0.063 \\ &= 1504 \text{ volts,} \end{aligned}$$

instead of 41,400 volts, which was characteristic of the flush-driven rod.

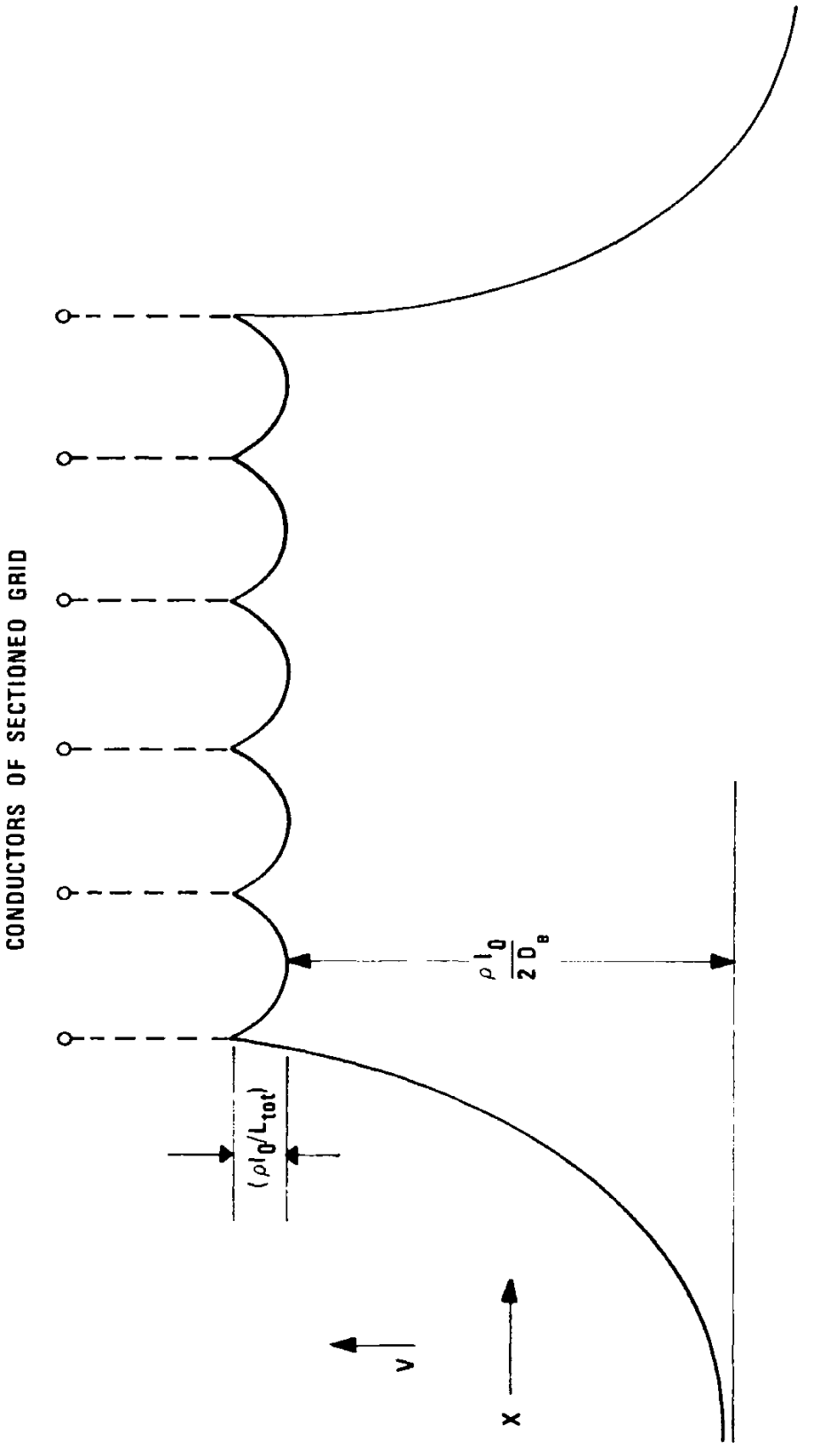

Figure 2-23. Surface Potential Variation Along a Grid

2.8.1.2.3 Buried Horizontal Grid. An expression for the resistance to earth for a buried grid was presented in Section 2.6.2.3. Equations 2-27 and 2-28 are the sum of a resistance of a superficial plate ($\rho/2D_e$) and a resistance term representing the per unit diffusion resistance of the earth electrode material (pI/L). A voltage pI/L which is proportional to the per unit average current flowing from the conductors of the mesh into the earth represents an approximation of the potential difference between the conductors of the mesh and the center of the open space with each mesh. The sketch of Figure 2-23 shows the resultant voltage distribution across a section of a grid. Note that the approximation used here would predict that

$$\frac{\rho I_o}{2D_e} \tag{2-65}$$

is the minimum voltage (with respect to infinity) at the edge of the grid, so that the grid simply translates the dangerous voltage gradient to the periphery of the grid (2-3).

If the value of earth resistivity is moderately high--say 104 ohm-cm--and if the lightning current is 2 x 10^4 amperes, the grid in the example of Section 2.6.2.4 would exhibit

$$\frac{\rho I}{L} = \frac{(10^4)(2\text{x}10^4)}{6.7 \text{ x } 10^4} \tag{2-66}$$

$$= 3000 \text{ volts}$$

over a five-foot (1.5 m) distance. This would exceed the safe step voltage of 1000 volts, developed earlier.

If the grid is made of conductors spaced one foot apart for a total conductor length of 20,200 feet (6157 m) there would be 10,000 meshes on the 10,000 square foot (929 m^2) area. The effective diameter would still be 113 feet (34.4 m), and the computed resistance would be

$$R_e = \rho\left[\frac{1}{2(3440)} + \frac{1}{(2.02\text{x}10^4)(12)(2.54)}\right] \tag{2-67}$$

$$\simeq 1.45 \text{ x } 10^{-4}\ \rho + \frac{10^{-4}}{61}\ \rho$$

The maximum step potential difference over the grid of the latter case, again assuming ρ is 10^4 is ohm-cm and an effective lightning current of 20,000 amperes, would be

$$\frac{\rho I}{L} = \frac{(10^4)\ (2 \times 10^4)}{(62)\ (10^4)}$$

$$= 322 \text{ volts}$$

This would be a safe value of step voltage for transients shorter than 30 milliseconds, if the transient, or surge, Impedance of the line does not greatly exceed its steady state resistance.

2.8.1.3 Minimizing Step Voltage. Table 2-8 lists several design approaches to reducing the potential hazards of step voltage. The most effective method is the reduction of the resistance to earth of the earth electrode system to as low a value as is economically feasible.

Table 2-8

Methods of Reducing Step Voltage Hazards

Design Approach	Remarks
1. Minimize resistance to earth of electrode system.	Resistance to earth is directly proportional to soil resistivity.
2. Bury earth electrode to reduce maximum gradient on surface of earth.	Connection to earth electrode must be insulated to withstand $5 \times 10^4 R_o$ volts.
3. Bury a grid beneath the earth, surrounding the earth electrode.	Tends to equalize the surface potential over area of grid.
4. Erect barricade so that personnel cannot enter area of danger.	Fence must be grounded

2.8.2 Heating of Electrodes. It is necessary to use enough material in an earth electrode to prevent excessive local heating when large currents flow in the electrode.

2.8.2.1 Steady State Current. The presence of fault current in the earth electrode subsystem must be limited to a value which will not raise the temperature of the soil above the boiling point of water. The tolerable steady state ac current into an earth electrode is (2-3).

$$I_{ss} = \frac{1}{R}\sqrt{0.024\rho\Delta T} \quad , \tag{2-68}$$

where

ρ = earth resistivity,
R = electrode resistance to earth, and
ΔT = permissible temperature rise (°C).

For ΔT = 60°C, the permissible steady state current is limited by

$$I_{ss} < \frac{1200}{R} \text{ amp}$$

when $\rho = 10^6$ ohm-cm, and by

$$I_{ss} < \frac{38}{R} \text{ amp}$$

when $\rho = 10^3$ ohm-cm. Since the voltage at the earth electrode is equal to the product I R, the corresponding voltage limits are

$$E_{ss} < 1200 \text{ volts}, \quad \rho = 10^6 \text{ ohm-cm}$$

and

$$E_{ss} < 38 \text{ volts}, \quad \rho = 10^3 \text{ ohm-cm}$$

2.8.2.2 Transient Current. The permissible transient current density for a temperature rise that does not exceed 60°C is found from the transient temperature time expression (2-3):

$$i = \sqrt{\frac{1.75\ \Delta T}{\rho t}} \text{ amp/cm}^2 \ , \tag{2-69}$$

Where

t = duration of the transient, in second,

Δ = temperature rise,

ρ = soil resistivity, ohm-cm, and

i = transient current density.

Letting $\Delta T = 60^{\circ}C$, one has

$$i_{max} = 10\sqrt{\frac{1}{\rho t}} \quad \text{amp/cm}^2$$

The current density, i, at the surface of a short ground rod is approximately constant over the lengh of the rod and is given by

$$i = \frac{I}{\pi d \ell} \quad \text{amp/cm}^2 . \tag{2-70}$$

where

d = rod diameter (cm),

ℓ = rod length (cm), and

I = input current (amperes).

For a 10- foot by 1-inch rod (3.05 m x 2.54 cm), the peak transient current which can be handled without causing greater than $60^{\circ}C$ temperature rise is:

$$\begin{aligned} I_{max} &= \pi d \ell \; i_{max} \\ &= \pi (2.54)\ (304.8)\ (10)\sqrt{\frac{1}{\rho t}} \\ &= 2.43 \times 10^4 \sqrt{\frac{1}{\rho t}} \quad \text{amperes.} \end{aligned} \tag{2-71}$$

2.8.2.3 Minimum Electrode Size. The necessity to hold the surface temperature below boiling temperatures establishes a minimum amount of electrode material.

The minimum length of a single ground rod is

$$\ell \geq \frac{I\sqrt{\rho t}}{10\pi d} \text{ cm.} \tag{2-72}$$

The value of $I\sqrt{t}$ is approximately 1000 for both lightning stroke currents and power system fault currents, so for satisfactory energy dissipation the minimum rod length is specified by

$$\ell \geq \frac{32}{d}\sqrt{\rho} \text{ cm.} \tag{2-73}$$

If the earth is moist soil with a ρ of approximately 10^4 ohm-cm, the limit becomes

$$\ell \geq \frac{3200}{d} \text{ cm.} \tag{2-74}$$

In granite with a ρ of approximately 10^6 ohm-cm, the limit becomes

$$\ell \geq \frac{32000}{d} \text{ cm.} \tag{2-75}$$

If 2-cm rods are used, the safe dissipation of heat in granite would require at least 80 rods, each 2 meters long. For moist earth, only 8 rods, each 2 meters long, would be required for heat dissipation.

2.9 ELECTRODE ENHANCEMENT.

2.9.1 Introduction. Sites may be encountered where acceptable and practical numbers of driven rods, buried cables, and other available materials will not achieve the desired low resistance to earth for special communication systems, i.e., HF transmitters. In such situations, enhancement of the resistivity of the soil around the electrodes may be necessary to lower the resistance to the desired value. While enhancement of the resistivity may be required in certain situations, discretion of its use should be exercised due to the reduced life span of the earth electrode subsystem.

The resistance to earth of an electrode is directly proportional to soil resistivity and inversely proportional to the total area of contact established with the soil. For fixed land areas, additional vertical rods or horizontal cables produce diminishing returns because of increased mutual coupling effects. The most straight forward enhancement method is to reduce soil resistivity. The parameters which strongly affect soil resistivity are moisture content, ionizable salt content, and porosity; the latter determining the moisture retention properties of the soil. Thus two recommended techniques for reducing earth resistivity are water retention and chemical salting.

2.9.2 Water Retention. Overdrainage of soil leaches away salts that are necessary for high conductivity and dries out the deeper layers, thereby increasing their rcsistivity. Planting of appropriate ground covers, such as legumes, to retard runoff and to enhance the natural production of salts in the soil is useful. Surface drainage should be channeled so as to keep the earth electrode subsystem moist. Maintaining moist earth over the extent of the earth electrode subsystem will keep soil salt in solution as conductive ions. Drainage water which is high in salt content can be useful for continuous salting of the earth electrode.

A porous clay, bentonite (also known as well drillers mud) can absorb water from surrounding soil and has hydration as well as water retention properties. When placed around ground rods and their interconnecting cable, it greatly increases the effective area of the rod and cable which in turn reduces the resistance of the earth electrode subsystem to earth (2-14, 2-15). Bentonite is generally available in dry (powder) form, must be saturated with water after initial installation and should be topped with a 12-inch layer of excavated soil. Caution is urged when using bentonite in areas that will ultimately be paved as it can expand to several times its dry volume when saturated. This can also prove to be a disadvantage of bentonite since it expands and contracts so much with moisture content, it can pull away from the ground rod and surrounding soil when moisture is lost. A much better backfill around ground rods is a mixture of 75 percent gypsum, 20 percent bentonite clay, and 5 percent sodium sulfate. The gypsum, which is calcium sulfate, absorbs and retains moisture and adds reactivity and conductivity to the mixture. Since it contracts very little when moisture is lost, it will not pull away from the ground rod or surrounding earth. The bentonite insures good contact between ground rod and earth by its expansion, while the sodium sulfate prevents polarization of the rod by removing the gases formed by current entering the earth through the rod. This mixture is available from cathodic protection distributors as standard galvanic anode backfill and is relatively inexpensive. The backfill mixture should be covered with 12 inches of excavated soil. This mixture is superior to chemical salts since it is much more enduring.

2.9.3 Chemical Salting. Reduction of the resistance of an electrode may also be accomplished by the addition of ion-producing chemicals to the soil immediately surrounding the electrode. The better known chemicals in the order of preference are:

a. Magnesium sulphate ($MgS0_4$) - epsom salts.

b. Copper sulphate ($CuS0_4$) - blue vitriol.

c. Calcium chloride ($CaC1_2$).

d. Sodium chloride (NaCl) - common salt.

e. Potassium nitrate (KNO_3) - saltpeter.

Magnesium sulphate (epsom salts), which is the most common material used, combines low cost with high electrical conductivity and low corrosive effects on a ground electrode or plate. The use of common salt or saltpeter is not recommended as either will require that greater care be given to the protection against corrosion. Additionally, metal objects nearby but not related to grounding will also have to be treated to prevent damage by corrosion. Therefore, salt or saltpeter should only be used where absolutely necessary.

Large reductions in the resistance to earth of the individual ground electrodes may be expected after chemical treatment has been applied to the earth. The initial effectiveness of chemical treatment is greatest where the soil is somewhat porous because the solution permeates a considerable volume of earth and increases the effective size of the electrode. In compact soils, the chemical treatment is not as immediately effective because the material tends to remain in its original location for a longer period of time.

The effectiveness of chemical treatment in lowering the resistance of a ground rod is illustrated by Figures 2-24 and 2-25. Chemical treatment achieves a significant initial reduction of resistance and further stabilizes the resistance variations. It also limits the seasonal variation of resistance and, additionally, lowers the freezing point of the surrounding soil.

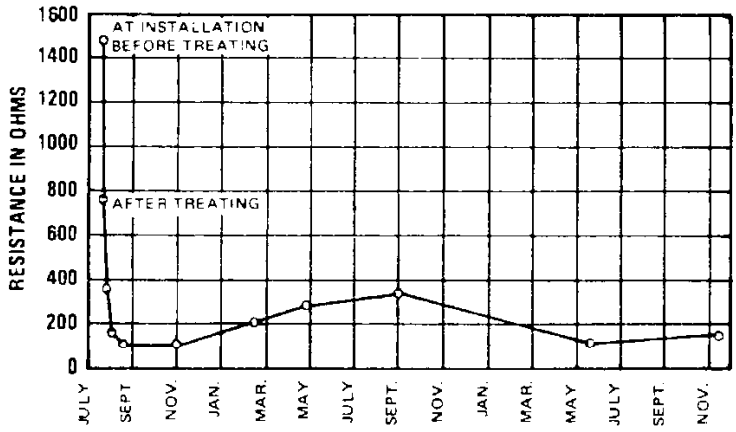

Figure 2-24. Effect of Chemical Treatment on Resistance of Ground Rods

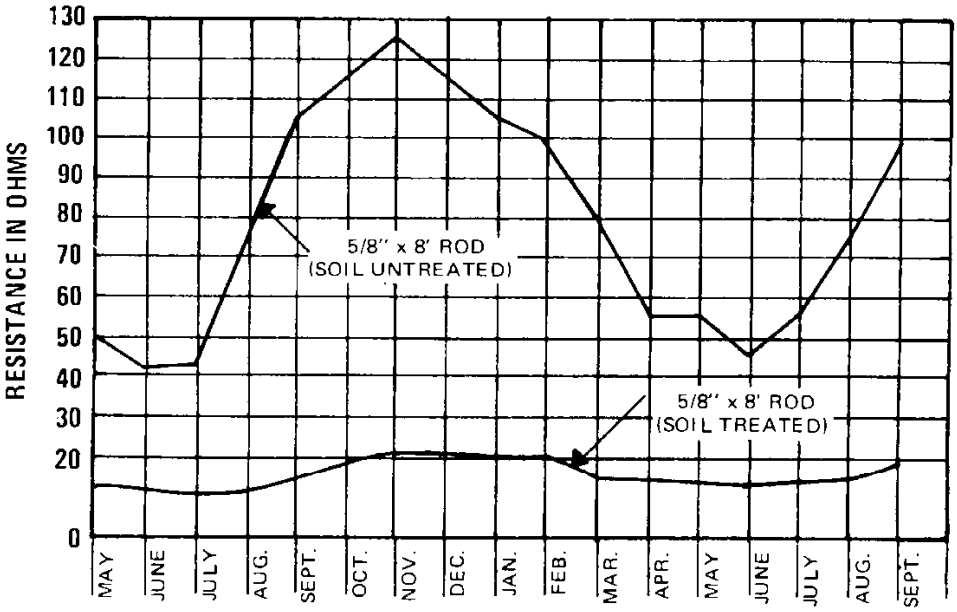

Figure 2-25. Seasonal Resistance Variations of Treated and Untreated Ground Rods

Chemical treatment is limited in its effectiveness, however. Consider, for example, a square array of 100 ground rods of length ℓ with spacings of twice the length of a rod. The resistance to earth (using an extrapolated value of 3 for K) from Figure 2-12 is (see also Equations 2-16 and 2-26)

$$R = \frac{(3)\ (0.366)\rho}{100\ \ell} \log \frac{3\ell}{d}$$

Assuming that

ρ = 10^6 ohm-cm (gravel sand stone),

ℓ = 100 feet (30.5 m) per rod, and

d = 1 inch (2.54 cm),

then

$$R = \frac{(3)\ (0.366)\ (10^6)\ (3.56)}{(100)\ (100)\ (12)\ (2.54)}$$

$$= 12.81 \text{ ohms}$$

The upper bound on the effectiveness of chemical enhancement can be illustrated by determining tile resistance to earth of a metal electrode which would completely fill the volume of earth (1800 x 1800 x 100 ft., i.e., 550 x 550 x 30 m) occupied by the above array of ground rods. The effective diameter, D_e, of the equivalent plate would be 2030 feet (619 m), and its resistance to earth would be (2-3):

$$R \simeq \frac{\rho}{2D_e}$$

$$= \frac{10^6}{(2)\quad(2030)\quad(12)\quad(2.54)} \qquad (2\text{-}76)$$

$$= 8 \text{ ohms}$$

The most that chemical enhancement could reduce the resistance of this large array would be by a factor of 1.58.

2.9.4 Electrode Encasement. The calculations of resistance of earth electrodes invariably assume zero contact resistance between the electrode elements and the earth. In reality, however, the interface between the surface of the rod and the earth is far from uniform except when the earth is tamped clay or its equivalent. Granular earth (gravel, etc.) makes very poor contact. Reduction of this contact resistance should have a strong effect on reducing the electrode resistance because it is close to the electrode where current density is high. Encasing the electrode in conductive mastic or conductive concrete is one approach to improving the contact between the electrode and the earth. Effects of local variations or moisture content will also be reduced and stabilized, if the encasement material absorbs and holds moisture.

2.9.5 Salting Methods. The trench method for treating the earth around a driven electrode is illustrated in Figure 2-26. A circular trench is dug about one foot deep around the electrode. This trench is filled with the soil treating material and then covered with earth. The material should not actually touch the rod in order to provide the best distribution of the treating material with the least corrosive effect.

Another method for treating the earth around a driven electrode, using magnesium sulphate and water, is illustrated in Figure 2-27. A 2-foot length (approximately) of 8-inch diameter tile pipe is buried in the ground surrounding the ground electrode. This pipe is then filled with magnesium sulphate to within one foot of grade level and watered thoroughly. The 8-inch tile pipe should have a wooden cover with holes and be located at ground level.

None of the aforementioned chemical treatments permanently improve earth electrode resistance. The chemicals are gradually washed away by rainfall and through natural drainage. Depending upon the porosity of the soil and the amount of rainfall, the period for replacement varies. Forty to ninety pounds of chemical will initially be required to maintain effectiveness for two or three years. Each replenishment of chemical will extend the effectiveness for a longer period so that the future treatments have to be done less and less frequently.

Another method of soil treatment or electrode enhancement involves the use of hollow made electrodes which are filled with materials/salts which absorb external atmospheric moisture. These electrodes (generally 8-feet long) must be placed in holes drilled by an earth auger making sure the breather holes at the top are above grade level. Moisture from the atmosphere is converted to an electrolyte which in turn seeps through holes in the electrode into the surrounding soil. This keeps the soil moist and thereby reduces the resistance of the electrode to earth. These electrodes should be checked annually to ensure sufficient quantities of materials/salts are available and that good continuity exists between the rod and interconnecting cable.

2.10 CATHODIC PROTECTION.

2.10.1 Introduction. When two metals of different types are immersed in wet or damp soil, a basic electrolytic cell is formed. A voltage equal to the difference of the oxidation potentials of the metals will be developed between the two electrodes of the cell. If these electrodes are connected together through a low resistance path, current will flow through the electrolyte with resultant erosion of the anodic member of the pair. Unfortunately, those factors that aid in the establishment of low resistance to earth also foster corrosion. Low resistance soils with a high moisture level and a high mineral salt content provide an efficient electrolytic cell with low internal resistance. Relatively large currents can flow between short-circuited electrodes (such as copper ground rods connected to steel footings or reinforcing rods in buildings) and quickly erode away the more active metal (see Section 7.8.1.2) of the cell. In high-resistance cells, the current flow is less and the erosion is less severe than in low-resistance cells.

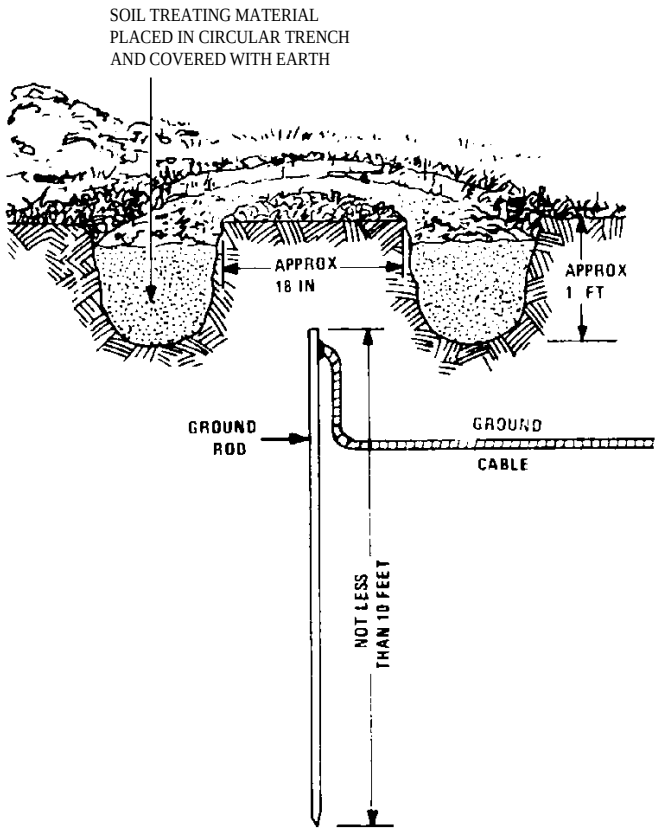

Figure 2-26. Trench Method of Soil Treatment

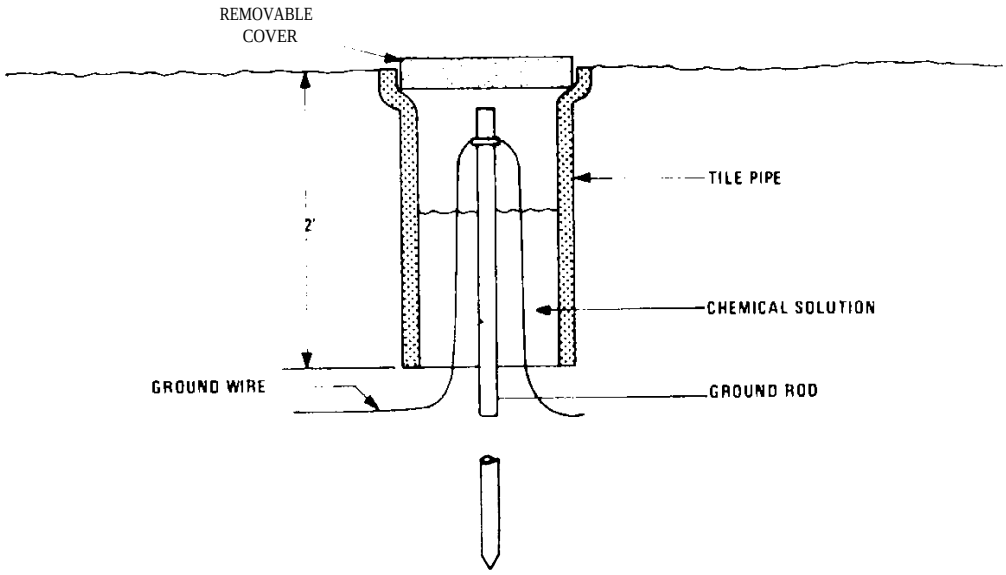

Figure 2-27. Alternate Method of Chemical Treatment of Ground Rod

2.10.2 Protection Techniques.

Three basic techniques can be used to lessen the corrosion rate of buried metals. The obvious method is to Insulate the metals from the soil by the use of protective coatings. This interrupts the current path through the electrolyte and stops the erosion of the anode. Insulation, however, is not an acceptable corrosion preventive for earth electrodes. The second technique for reducing galvanic corrosion is avoiding the use of dissimilar metals at a site. For example, if all metals in contact with the soil are of one type (such as iron, lead or copper), galvanic corrosion is minimized. Each of these materials, however, has unique properties such as weight, cost, conductivity, ductility, strength, etc., that makes its use desirable, and thus none can be summarily dismissed from consideration for underground applications. Copper is a desirable material for the earth electrode subsystem; apart from its high conductivity, the oxidation potential of copper is such that it is relatively corrosion resistant. Since copper is cathodic relative to the more common structural metals, its corrosion resistance is at the expense of other metals. Iron electrodes would, of course, be compatible with water pipes, sewer lines, reinforcing rods, steel pilings, manhole covers, etc., but iron is subject to corrosion even in the absence of other metals. In addition, the conductivity of iron is less; however, steel grounding rods are sometimes used by electric utilities for grounding associated with their transmission lines. Because of the greater conductivity and corrosion resistance of copper, it is normally used for the grounding of buildings, substations, and other facilities where large fault or lightning currents may occur and where voltage gradients must be minimized to ensure personnel protection.

The third technique for combating the corrosion caused by stray direct currents and dissimilar-metal unions is commonly called cathodic protection. Cathodic protection may be implemented through the use of sacrificial anodes or the use an an external current supply to counteract the voltage developed by oxidation. Sacrificial anodes containing magnesium, aluminum, manganese, or other highly active metal can be buried in the earth nearby and connected to an iron piling, steel conduit, or lead cable shield. The active anodes will oxidize more readily than the iron or lead and will supply the ions required for current flow. The iron and lead are cathodic relative to the sacrificial anodes and thus current is supplied to counteract the corrosion of the iron or lead. The dc current is normally derived from rectified alternating current, but occasionally from photovoltaic cells, storage batteries, thermoelectric generators, or other dc sources. Since the output voltage is adjustable, any metal can be used as the anode, but graphite and high silicon iron are most often used because of their low corrosion rate and economical cost. Cathodic protection is effective on either bare or coated structures. If the sacrifical anodes are replenished at appropriate intervals, the life of the protected elements is significantly prolonged.

2.10.3 Sacrificial Anodes. Sacrificial anodes provide protection over limited areas. Impressed current cathodic protection systems use long lasting anodes of graphite, high silicon cast iron or, to a lesser extent, platinum coated mobium or titanium. The protection of long cable or conduit runs can be provided by biasing the metal to approximately -0.7 to -1.2 volts relative to the surrounding soil. The external dc source supplies the ionization current that would normally be provided by the oxidation of the cable sheath or conduit. This dc current is normally derived from rectified ac and occasionally from photovoltiac cells, storage batteries, thermoelectric generators, or other dc sources. A layer of insulation such as neoprene must cover the metal to prevent direct contact with the surrounding soil. Therefore, the technique is not appropriate for protecting foundations, manholes, or other structural elements normally in contact with the soil. It is most appropriate for supplying the leakage current that would normally enter the soil through breaks in the insulation caused by careless installation, settling, lightning perforation, etc.

2.10.4 Corrosive Atimospheres. In regions exhibiting low soil resistivity, in corrosive atmospheres such as might be encountered near seashores, or near sources of large direct currents such as electroplating facilities, cathodic protection may be necessary to prolong the life of foundations, underground cable facilities, or other elements of a facility in contact with the soil. For additional information on the galvanic series of common metals see Table 7-7.

2.11 GROUNDING IN ARCTIC REGIONS.

2.11.1 Soil Resistivity. The problem of electric earth grounding in cold regions is primarily one of making good contact with high resistivity soils. Where frozen high resistivity materials are encountered, optimum grounding of power and communication circuits can only be accomplished by special attention to both surface and subsurface terrain. The fact is that resistance of frozen soils can be ten to a hundred times higher than in the unfrozen state. Seasonal changes in temperature and moisture will therefore extensively affect the soil resistance. Table 2-9 provides information on the effect of moisture content on earth resistivity, while Table 2-10 provides the effect of temperature on earth resistivity (2-16, 2-17).

Table 2-9. Effect of Moisture Content on Earth Resistivity

Moisture Content	Resistivity, ohm-cm	
% By Weight	Top Soil	Sandy Loam
0	$1,000 \times 10^4$	$1,000 \times 10^6$
2.5	250,000	150,000
5	165,000	43,000
10	53,000	18,500
15	17,000	10,500
20	12,000	6,300
30	6,400	4,200

Table 2-10. Effect of Temperature on Earth Resistivity *

Temperature		Resistivity
°C	°F	ohm-cm
20	68	7,200
10	50	9,900
0	32 (water)	13,800
0	32 (ice)	30,000
-5	23	79,000
-15	5	330,000

*For sandy loam, 15.2% moisture.

Permafrost occurs in various degrees throughout much of the arctic and subarctic regions and is defined as that part of the lithosphere (upper crust of the earth) in which a naturally occurring temperature below 0°C (32°F) has existed continuously for two or more years. The "annual frost zone" is the zone of annual freezing and thawing. Where permafrost occurs, the thickness of this surface layer varies from less than afoot in the arctic to depths in excess of 12 feet in the subarctic. The seasonal thaw zone remains unfrozen only during the short summer months. During this period, it is possible to recognize terrain features which can be located in the spring and fall if there is little or no snow cover.

Willow groves or aspen generally point to the absence of permafrost and to the presence of groundwater which freezes only for a short time. River bottoms and lake bottoms are usually frost-free. Generally, slow moving rivers and streams freeze from the top down (surface ice). Clear, fast moving rivers and streams usually freeze from the bottom up (anchor ice). Mountains, valleys, lake bottoms, streambeds, tree-covered slopes, tundra plains, swamplands, ice glaciers, silty estuaries, permafrost areas, and seasonably frozen ground, each will be found to affect soil resistivity. Consequently, it is easily seen how one area versus another might be more suitable for good grounding. Basic illustrations of variations, layering and asymmetrical contouring can be found in Figures 2-28, 2-29, and 2-30.

Resistance to ground and configuration of electrodes are further parameters that must be considered. The conductivity of cables and overhead wire systems are relatively high in comparison to the earth. Without the presence of minerals, dissolved salts, and moisture, clean dry soil can be classified as an insulator and possesses the intermediate characteristics of a poor conductor.

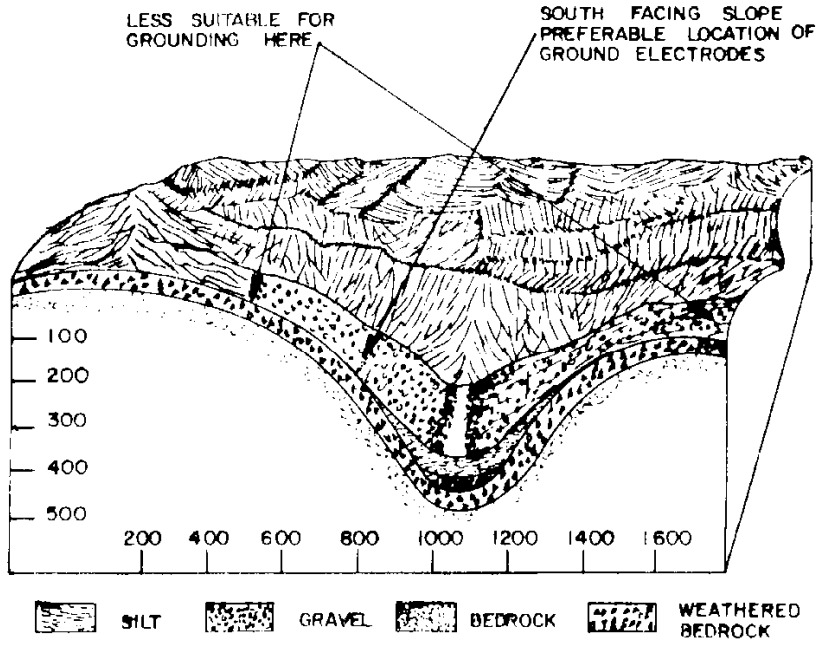

Figure 2-28. Relative Depths of Unconsolidated Materials, Subarctic Alaska

Seasonal freezing accounts for a reduced conductivity as illustrated in Table 2-10. If frozen soil or earth has a low conductivity, then providing larger effective electrodes will reduce the ground resistance. In northern arctic areas generally having very shallow surface thaw Iayers, horizontal rods or wires might be easier to install than driven rods and still provide optimum resistance values to earth or ground. Whether to install multiple electrodes or single deep, driven rods, or horizontal wires, the decision will usually be dependent on soil types and the economics of placement.

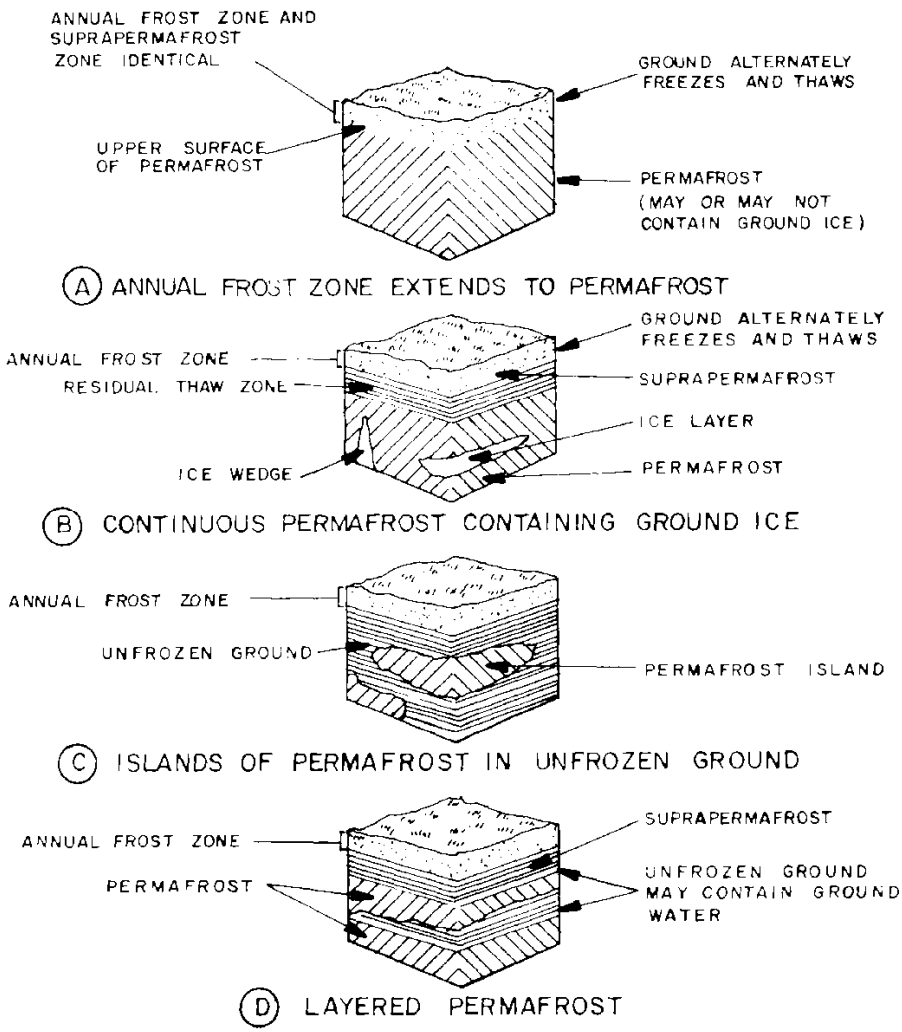

Figure 2-29. Typical Sections Through Ground Containing Permafrost

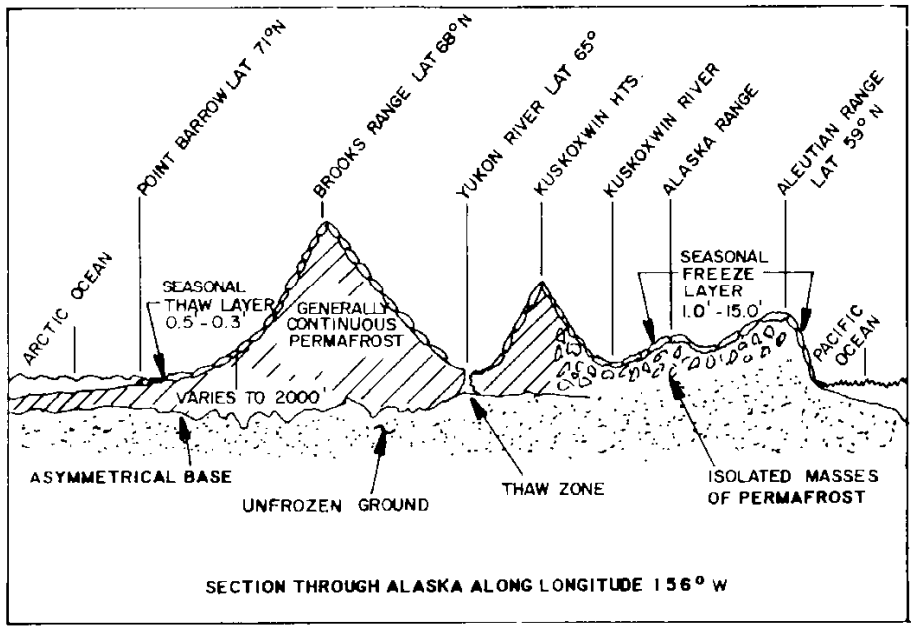

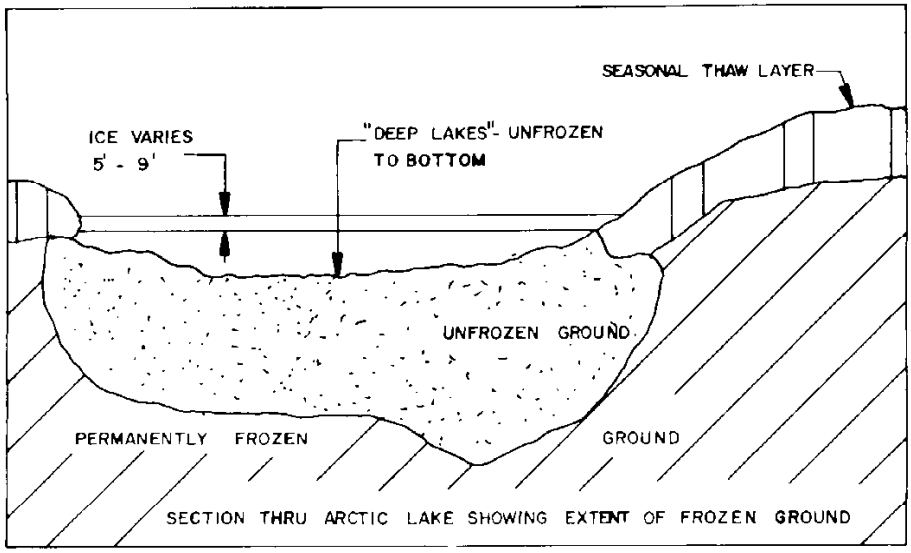

Figure 2-30. Illustration Showing Approximate Variations in Substructure

2.11.2 Improving Electrical Grounding in Frozen Soils. High electrical resistance of grounding sites is common in areas where the ground freezes. The performance of grounding installations can, however, often be increased through site selection and various electrode installation schemes. The degree of improvement will depend on the local existence and accessibility of conductive soils. The most common conductive sites are associated with thaw zones or clay-rich soils. The greatest grounding problems usually occur where bedrock, coarse-grained soil, or cold, ice-rich soil is found near the surface.

In temperate regions, small field installations can usually be adequately grounded by driving a simple vertical electrode into the soil. This technique has been unsuccessful in areas of frozen ground because: (1) driving electrodes is difficult, (2) frozen materials tend to be electrically resistive, and (3) high contact potentials can develop between a rod and the frozen soil because a thin ice layer can form around the cold rod.

Installation procedures can be modified in some frozen ground settings to eliminate some of these problems, permitting order-of-magnitude reductions in the resistance to ground. However, in many regions of the Arctic, electrical resistivity of the frozen ground is extremely high, and grounding may not be significantly improved by local modification or treatment of the soil surrounding the electrode. Achieving “low” resistance grounds of less than several ohms will often require that the site be selected in a zone of conductive material and is described in paragraph 2.11.1.

Other factors such as accessibility to water, power, roads, real estate, siting requirements, electromagnetic compatibility, etc, may however require that a site be located in an area of low soil conductivity. This establishes the rather high probability of not being able to attain a low resistance to ground without considerable cost and effort. Studies (2-17) conducted to determine methods to obtain low or acceptable resistances in areas of low soil conductivity in turn raised additional questions:

a. What is the influence of ground temperature, material type and associated variations in unfrozen water content on the performance of an installation?

b. What is the influence of material type and associated differences in permeability and saturation on salt solutions added to the soil surrounding an electrode?

c. What is the effectiveness of using more than one electrode for lowering resistance to ground?

d. What is the long-term influence of conductive backfills and what is the suitability of various materials for backfill around electrodes placed in holes of larger diameter than the electrodes?

The main procedure which can be used to reduce resistances to ground is to place the ground rod or electrode in open holes having diameters greater than the electrodes thereby making emplacement easier and permitting the usc of conductive backfill. The holes can be made by drilling or blasting with shaped charges. Another procedure which may be used in limited situations is to lay or drive an array of horizontal rods into an active layer.

2.11.2.1 Electrode Resistance. The resistance of ground, R, of a single vertical electrode of length ℓ in cm, and radius α in cm, emplaced in homogeneous soil of resistivit ρ (ohm - cm) is found from:

$$R\ (\text{ohms}) = \frac{\rho}{2\pi\ell}\left[\ln\frac{4\ell}{\alpha} - 1\right] \tag{2-77}$$

This equation may be used to estimate the penetration depth of conductive salt solutions in the soil adjacent to the treated backfill. Since the backfill is conductive, the electrode radius therefore is not just that of the metallic electrode, but initially the diameter of the hole filled with treated backfill. This large composite electrode is referred to as the effective electrode. For a constant ground temperature, any reduction in electrode resistance of a frozen saturated soil with time should be related to an increase in effective electrode diameter, presumably through salt movement. This increase can be determined by the soil resistivity ρ from equation 2-77 using the resistance to ground of the test electrode and the effective electrode radius measured at the time of installation. Periodically, after installation, the resistance to ground should be remeasured and the effective electrode radius can be calculated using the following form of equation 2-77 and using the soil resistivity calculated earlier:

$$\alpha\ (\text{cm}) = \frac{4\ell}{\exp\left[1 + (2\pi\ell\ R/\rho)\right]} \tag{2-78}$$

2.11.2.2 Installation and Measurement Methods.

2.11.2.2.1 Electrode Installation. Holes can be drilled with augers designed for use in frozen ground with hole diameters ranging from 3.8 cm (1-1/2 in.) to 91.4 cm (3 ft) and depths seldom greater than 2 m (6 ft). Hand-held equipment, consisting of an electric drive or a 5-hp gasoline-powered drill can also be used for most of the shallow, smaller-diameter holes. Both units could be used with a coring auger to drill holes up to 11 cm (4 in.) in diameter in fine-grained frozen soils. A truck-mounted auger can be used for the larger-diameter vertical holes drilled in coarse-grained materials. The horizontal electrodes can be hand-pushed and then driven into the thin seasonally thawed layer.

Military 6.8 kg (M2A3) shaped charges (used only by qualified personnel) can also be employed to produce vertical holes. Their similar performances in a range of frozen materials, with penetration approaching the length of standard electrodes, make this charge size ideal for electrode installation. The volume of several of the drilled holes can also be expanded by using C-4 block explosives.

2.11.2.2.2 Backfill. Reduction of contact potential is important in establishing a good electrical ground. In frozen soil, ice can form around the electrode, causing high contact resistance. Ice formation on the rod surface is likely since the rod is easily chilled by exposure of the upper end to low air temperatures. The beneficial effect of pouring untreated water around an electrode will only be short-term in cold environments. Therefore, the use of conductive backfill with a low freezing point becomes paramount to attain good ground or earth contact.

The backfill can be prepared by mixing salt and local soil or by saturating the soil backfill with a salt-water solution as shown in Figure 2-31. Backfill other than soil can also be used because soil is not always easily recovered from some drilled or blasted holes and because unfrozen material is difficult to find during the winter. Absorbent paper saturated with a salt solution and compacted in the hole around the electrode can also be used as a soil substitute.

The amount of salt added to the backfill is determined by preliminary laboratory conductivity measurements of several salt-soil mixtures. Salt may be added to silt and to a fine sand to obtain mixtures of from 0 to 20% salt based on the weight of the air-dried soil. Distilled water can be added to the salt-soil mixtures to obtain several soil moisture levels up to saturation for both materials. The soils should be compacted into a cylindrical plexiglass ring, which is clamped between electrodes for resistivity measurements at 1 kHz. Figure 2-32 shows the resistivity for two soils as a function of salt concentration at several volumetric moisture contents. A salt-soil mixture containing 1% salt results in a dramatic decrease in resistivity, with little effect after 5% salt for most moisture levels. Therefore, a 5% salt by weight is recommended for backfill as it produces a very conductive salt-soil mixture with the least amount of salt.

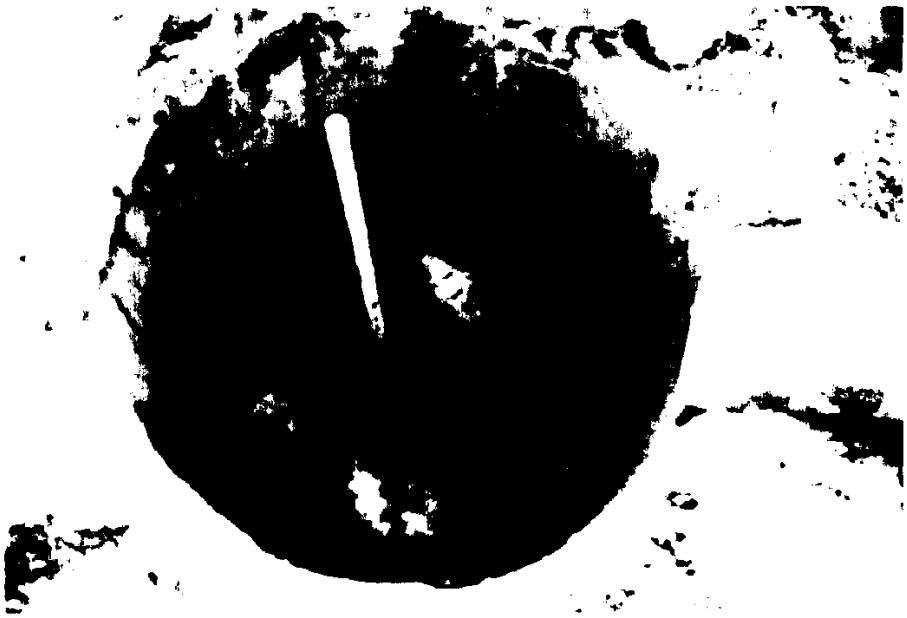

Figure 2-31. Installation of an Electrode During the Process of Backfilling with a Salt-Soil Mixture

bait solution may also be poured around shallow-driven horizontal electrodes to minimize contact resistance during freezeback. These salt solutions in general may have concentrations on the order of 50-100%. Figure 2-33 shows a configuration of such horizontal electrodes placed in a thawed active layer.

Curves showing resistance-to-ground for metallic electrodes having various backfills are shown in Figures 2-34 through 2-38. Large seasonal variations are noted in electrode performance due to variations in unfrozen water content in both thawed and frozen materials. In some situations the improvement in grounding conditions during thaw periods can be extended by use of conductive backfill. The lower freezing point of the backfill will also reduce electrode contact resistance caused by freezing around the metallic electrodes.

Over a period of time, salt very likely will move into the soil adjacent to the electrode backfill and therefore will increase the effective area of the ground electrode and in turn reduce the resistance values. The level of the backfill should be checked annually to insure adequate levels are maintained to replenish this loss due to seepage.

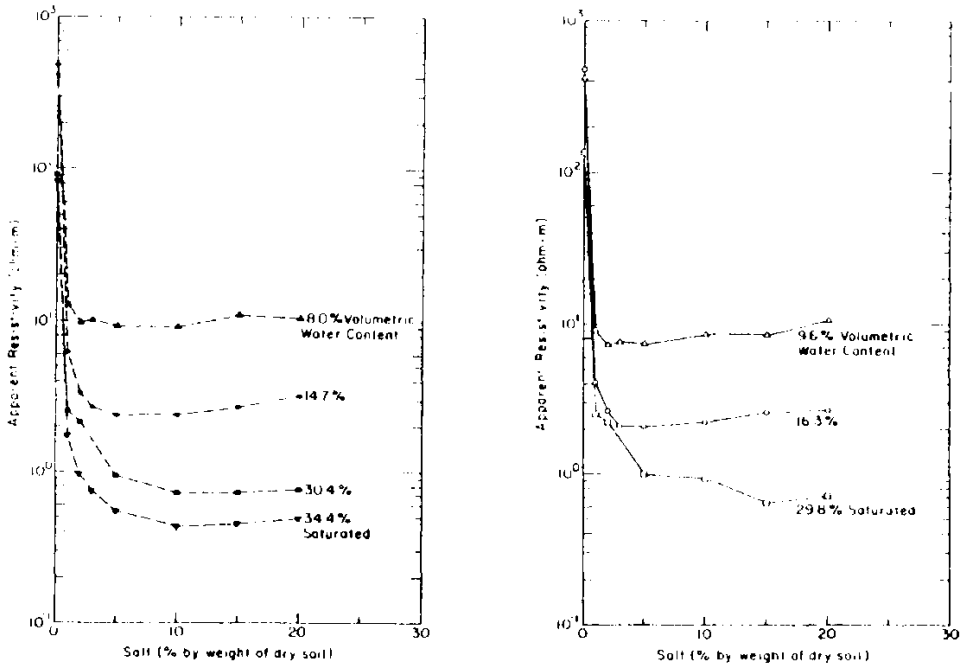

a. Fairbanks silt

b. Fine sand

Figure 2-32. Apparent Resistivity for Two Soils at Various Moisture and Salt Contents

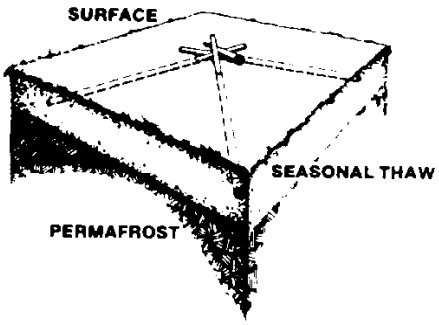

Figure 2-33. Configuration of Nearly Horizontal Electrodes Placed in the Thawed Active Layer

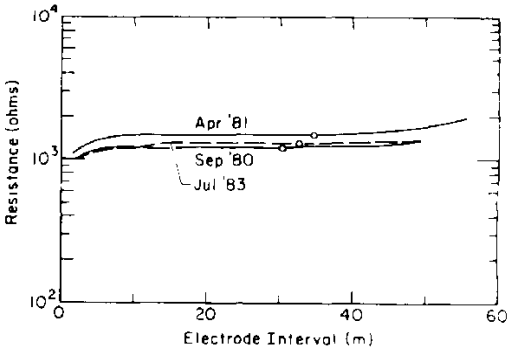

Figure 2-34. Resistance-to-Ground Curves for an Electrode Driven into Ice-Rich Silt

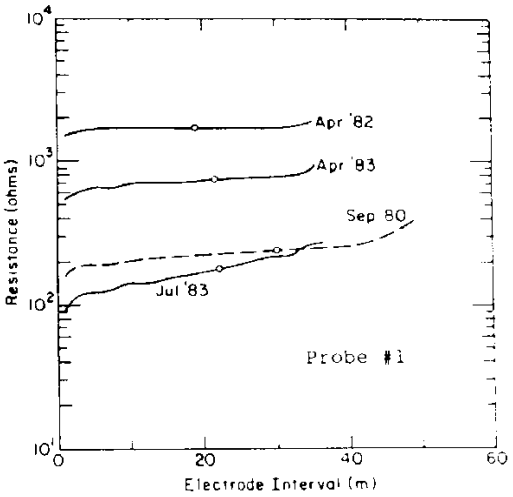

Figure 2-35. Resistance-to-Ground Curves for an Electrode Surrounded by a Backfill of Saturated Silt

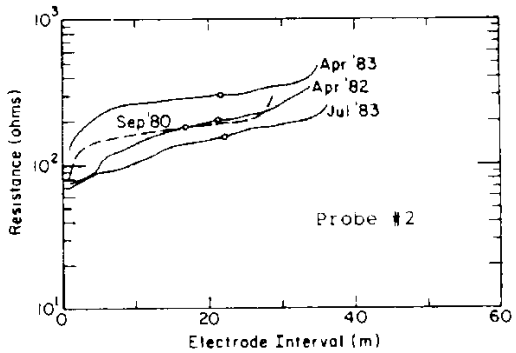

Figure 2-36. Resistance-to-Ground Curves for an Electrode Surrounded by a Water-Saturated Salt-Soil Backfill

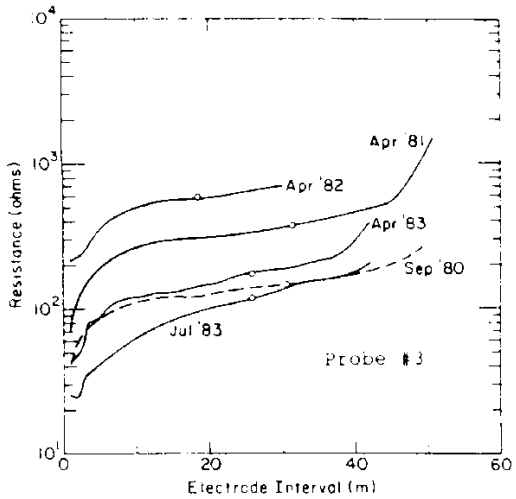

Figure 2-37. Resistance-to-Ground Curves for an Electrode Surrounded by a Water-Saturated Salt-Soil Backfill

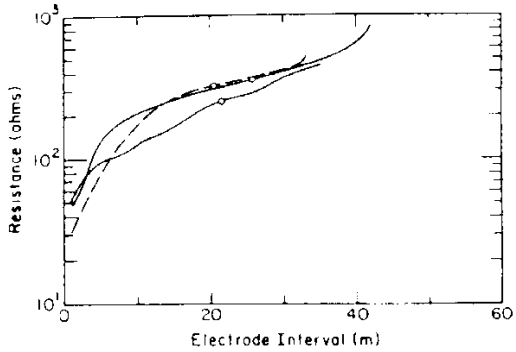

Figure 2-38. Resistance-to-Ground Curves for 3 Electrodes Placed in Holes Modified by Spring Charges and Filled with a Salt-Water Solution.

2.12 REFERENCES.

2-1. N.M. Towne, "Lightning -- Its Behavior and What To Do About It." United Lightning Protection Assn, Inc, Ithaca NY 1956.

2-2. National Electrical Code, 1987 Edition, NFPA No. 70-1987, National Fire Protection Association, Battery march Park, Quincy MA 02269.

2-3. Guide for Safety in Alternating-Current Substation Grounding, IEEE Std 80-1961, IEEE, New York NY, (R 1971).

2-4. R. Rudenberg, "Fundamental Considerations on Ground Currents," Electrical Engineering, Vol 64, pp 1-13, January 1945.

2-5. “Earthing,” British Standard Code of Practice CP 1013: British Standards Institution, London.

2-6. O.S. Peters, “Ground Connections for Electrical Systems,” Technological Paper No. 108, US National Bureau of Standards, 20 June 1918.

2-7. "Getting Down to Earth . . ." Manual 25T, James G. Biddle Co, Plymouth Meeting PA, October 1970.

2-8. F. Wenner, “A Method of Measuring Earth Resistivity," Bulletin of the Bureau of Standards, Vol 12, pp 469-478, 1915-1916.

2-9. H. B. Dwight, “Calculation of Resistance to Ground,” Elec. Engr, Vol 55, December 1936, pp 1319-1328.

2-10. E. D. Sunde, Earth Conduction Effects in Transmission Systems, Dover Publications, Inc, New York NY, 1968.

2-11. W. W. Lewis, The Protection of Transmission Lines Against Lightning, John Wiley, New York, 1950.

2-12. Installation Practices: Communications Systems Grounding, Bonding and Shielding, Army FM 11-487-4, Air Force T.O. 31-10-24, Dept of Army and Air Force, September 1978.

2-13. G. I3. Tagg, “Measurement of the Resistance of an Earth-Electrode System Covering a Large Area,” Proc. IEEE, Vol 116, March 1969, pp 475-479.

2-14. Warren R. Jones, "Bentonite Rods Assure Ground Rod Installation in Problem Soils,” IEEE Transactions on Power Apparatus and Systems, Vol PAS-99 No. 4, July/Aug 1980.

2-15. Lloyd B. Watts, “Improved Grounding Systems for Mountain Top Radio Sites.”

2-16. P.V. Sellman, A.J. Delaney, and S.A. Arcone, Conductive Backfill for Improving Grounding in Frozen Soils, Special Report 84-17, June 1984. US Army Corps of Engineers - CRREL.

2-17. A.J. Delaney, P.V. Sellman, and S.A. Arcone, Improving Electrical Grounding in Frozen Materials, Special Report 82-13, June 1982, US Army Corps of Engineers - CRREL.

CHAPTER 3

LIGHTNING PROTECTION SUBSYSTEM

3.1 THE PHENOMENON OF LIGHTNING.

Cumulonimbus clouds associated with thunderstorms are huge, turbulent air masses extending as high as 15 to 20 kilometers (9 to 12 miles) into the upper atmosphere. Through some means, not clearly understood, these air masses generate regions of intense static charge. These charged regions develop electric field gradients of hundreds, or perhaps thousands, of millions of volts between them. When the electric field strength exceeds the breakdown dielectric of air (= 3 x 10^6 volts/meter), a lightning flash occurs and the charged areas are neutralized.

Electric field measurements indicate that the typical thundercloud is charged in the manner illustrated by Figure 3-1 (3-l). A strong, negatively charged region exists in the lower part of the cloud with a counterbalancing positive charge region in the upper part of the cloud. In addition to these major charge centers, a smaller, positively charged region exists near the bottom of the cloud. Due to the strong negative charge concentration in the lower portion of the cloud, the cloud appears to be negatively charged with respect to earth -- except in the immediate vicinity underneath the smaller positive charge concentration.

Breakdown can occur between the charged regions within the cloud to produce intracloud lightning. It can also occur between the charged regions of separate clouds to produce cloud-to-cloud lightning. Intracloud and cloud-to-cloud discharges do not present a direct threat to personnel or structures on the ground and thus tend to be ignored in the design and implementation of lightning protection systems. However, calculations of the voltages which could be induced in cross-country cables by such discharges (3-2) indicate that they present a definite threat to signal and control equipments, particularly those employing solid state devices.

The cloud-to-ground flash is the one of primary interest to ground-based installations. By definition, such flashes take place between a charge center in the cloud and a point on the earth. This point on earth can be a flat plain, body of water, mountain peak, tree, flag pole, power line, residential dwelling, radar or communications tower, air traffic control tower, or multi-story skyscraper. In a given area, certain structures or objects are more likely to be struck by lightning than others; however, no object whether man-made or natural feature, should be assumed to be immune from lightning.

The high currents which flow during the charge equalization process of a lightning flash can melt conductors, ignite fires through the generation of sparks or the heating of metals, damage or destroy components or equipments through burning or voltage stressing, and produce voltages well in excess of the lethal limit for people and animals. The objective of all lightning protection subsystems is to direct these high currents away from susceptible elements or limit the voltage gradients developed by the high currents to safe levels.

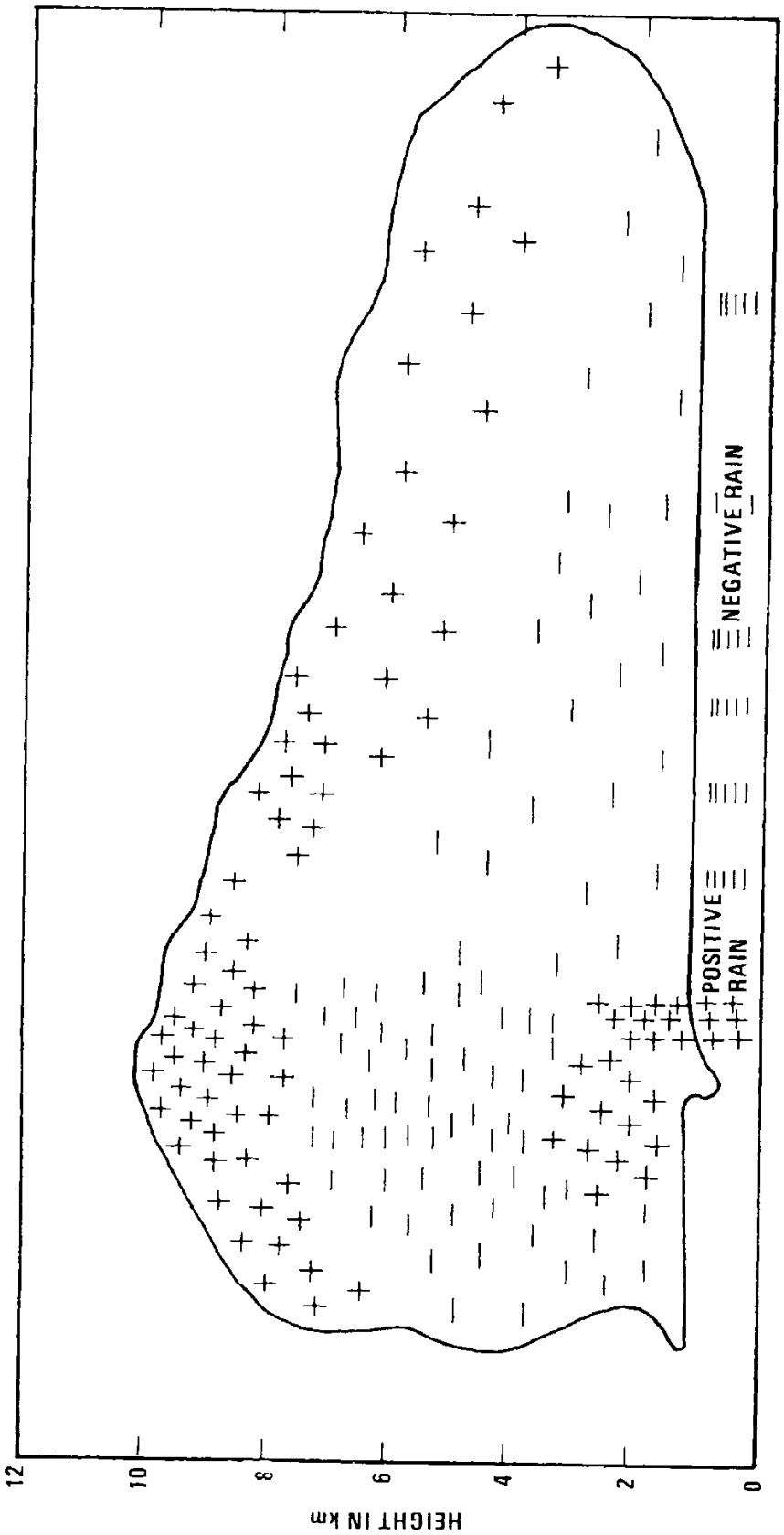

Figure 3-1. Charge Distribution in a Thundercloud

3.2 DEVELOPMENT OF A LIGHTNING FLASH.

As the charge builds up in a cloud, the electric field in the vicinity of the charge center builds up to the point where the air starts to ionize. A column of ionized air, called a pilot streamer, begins to extend toward earth at a velocity of about 160 kilometers per hour (100 miles per hour) (3-3). After the pilot streamer has moved perhaps about 30 to 45 meters (100 feet to 150 feet), a more intense discharge called a stepped leader takes place. This discharge lowers additional negative charge into the region around the pilot streamer and allows the pilot streamer to advance for another 30 to 45 meters (100 to 150 feet) after which the cycle repeats. The stepped leader progresses towards the earth in a series of steps with a time interval between steps on the order of 50 microseconds (3-4).

In a cloud-to-ground flash, the pilot streamer does not move in a direct line towards the earth but instead follows the path through the air that ionizes most readily. Although the general direction is toward the earth, the specific angle of departure from the tip of the previous streamer that the succeeding pilot streamer takes is rather unpredictable. Therefore, each 30 to 45 meter (100 to 150 foot) segment of the discharge will likely approach the earth at a different angle. This changing angle of approach gives the overall flash its characteristic zig-zag appearance.

Being a highly ionized column, the stepped leader is at essentially the same potential as the charged area from which it originates. Thus, as the stepped leader approaches the earth, the voltage gradient between the earth and the tip of the leader increases. The increasing voltage further encourages the air between the two to break down.

The final stepped leader bridges the gap between the downward programing column and the earth or an extension of the earth such as a tree, building, or metal structure that is equipotential with the earth. While the stepped leader is approaching the earth, a positive charge equivalent to the negative charge in the cloud is accumulating in the general region underneath the approaching leader. Once the stepped leader cent acts earth (or one of its extensions), the built-up positive charge in the earth flows rapidly upward through the ionized column established by the stepped leader to neutralize the strong negative charge of the cloud. This return current constitutes what is generally referred to as the lightning stroke. If additional pockets of charge exist in the cloud, these pockets may discharge through the ionized path established by the initial stroke. Continuous dart leaders proceed from a remaining charge pocket toward the earth down this path. Once the dart leader reaches the earth, another return stroke of positive charge propagates up the channel to neutralize the secondary charge in the cloud. This cycle may be repeated several times as succeeding charge centers in the cloud are neutralized.

3.3 INFLUENCE OF STRUCTURE HEIGHT.

Flashes to earth are normally initiated by a pilot streamer from the cloud. As the charged leader approaches the ground, the voltage gradient at the surface increases. Ultimately the voltage becomes high enough for an upward-moving leader to be induced. Over flat, open terrain, the length of the upward leader does not exceed a few meters before it unites with the downward leader to start the return stroke. However, structures or other extensions from the earth's surface experience intensified electric field concentrations at their tips. Consequently the upward leaders are generated while the downward leader is some distance away; the upward

leader can be several hundred meters long before the two meet. For very tall buildings, the upward leaders begin to form even before the downward leaders have begun to form within the cloud; such incidents are generally described as triggered lightning. Triggered lightning is not very common for structures less than 150 meters (500 feet) in height; as the height increases above this threshold, the proportion of triggered strikes increases rapidly (3-5).

3.4 STRIKE LIKELIHOOD.

The number of total flashes to which the structure is exposed is related principally to local thunderstorm activity. Local thunderstorm activity can be projected from isokeraunic maps similar to those shown in Figures 3-2 and 3-3. These maps show the number of thunderstorm days per year for various regions of the United States and the world. Additional maps of worldwide keraunic levels can be obtained from the World Meteorological Association (3-6).

A thunderstorm day is defined as a local calendar day on which thunder is heard irrespective of whether the lightning flashes are nearby or at some distance away. To an observer at a specific location, the average distance at which lightning may occur and thunder will be heard is about 10 km (6 miles) (3-5). Therefore, a thunderstorm day means that at least one lightning discharge has occurred within an area of about 300 square km (120 square miles) surrounding the position of the observer. The actual number of strikes in the immediate vicinity of the observer may be considerably higher or lower than the number of thunderstorm days might indicate, depending upon the duration and intensity of a specific storm or series of storms.

In spite of the relative inexactness of a prediction of a lightning strike to a specific object that is based on the keraunic level, the thunderstorm day is the only parameter related to lightning incidence that has been documented extensively over many years. Its primary value lies in the qualitative information which it provides. This information can be used to assist in the deter ruination of whether lightning protection should be provided in those situations where there is serious doubt as to the relative need for such protection. For example, a particular facility may not be essential to the safety of aircraft, but the loss of the facility may cause traffic delay. In an area of frequent thunderstorms such as the west coast of Florida, for example, the number of outages in areas where there was no protection could be so high as to be unacceptable; in an area of few thunderstorms; e.g., Southern California or Alaska, the expected outage from lightning might be once every few years (which could be significantly less than outages for routine maintenance).

The number of lightning flashes per unit earth surface area increases with the number of thunderstorm days per year, though not linearly. Empirical evidence indicates that the number of flashes per square kilometer, $ó_y$, can be reasonably predicted from (3-5):

$$ó_y = 0.007 \; T_Y^2 \qquad (3\text{-}1)$$

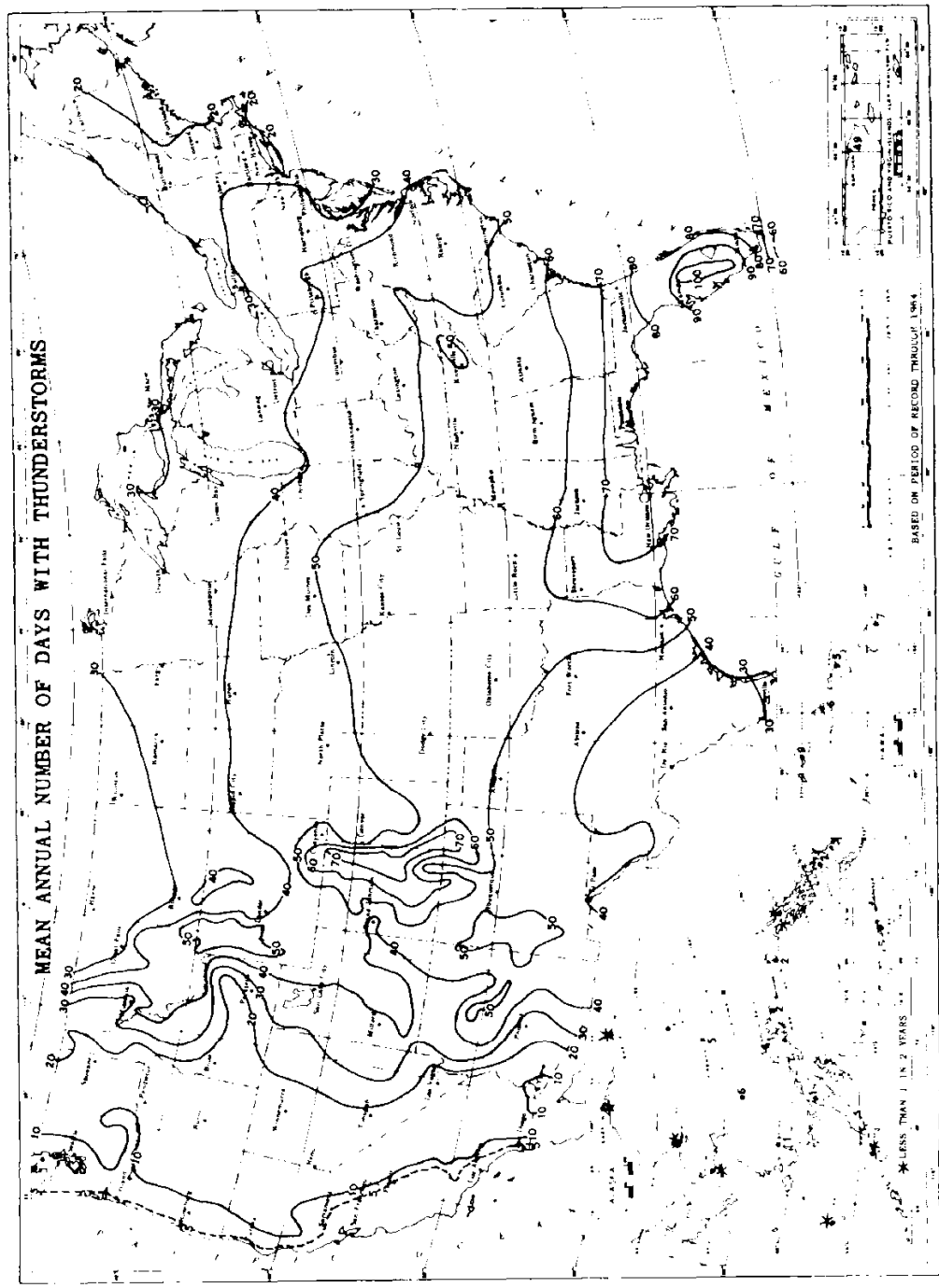

Figure 3-2. Mean Number of Thunderstorm Days Per Year for the United States

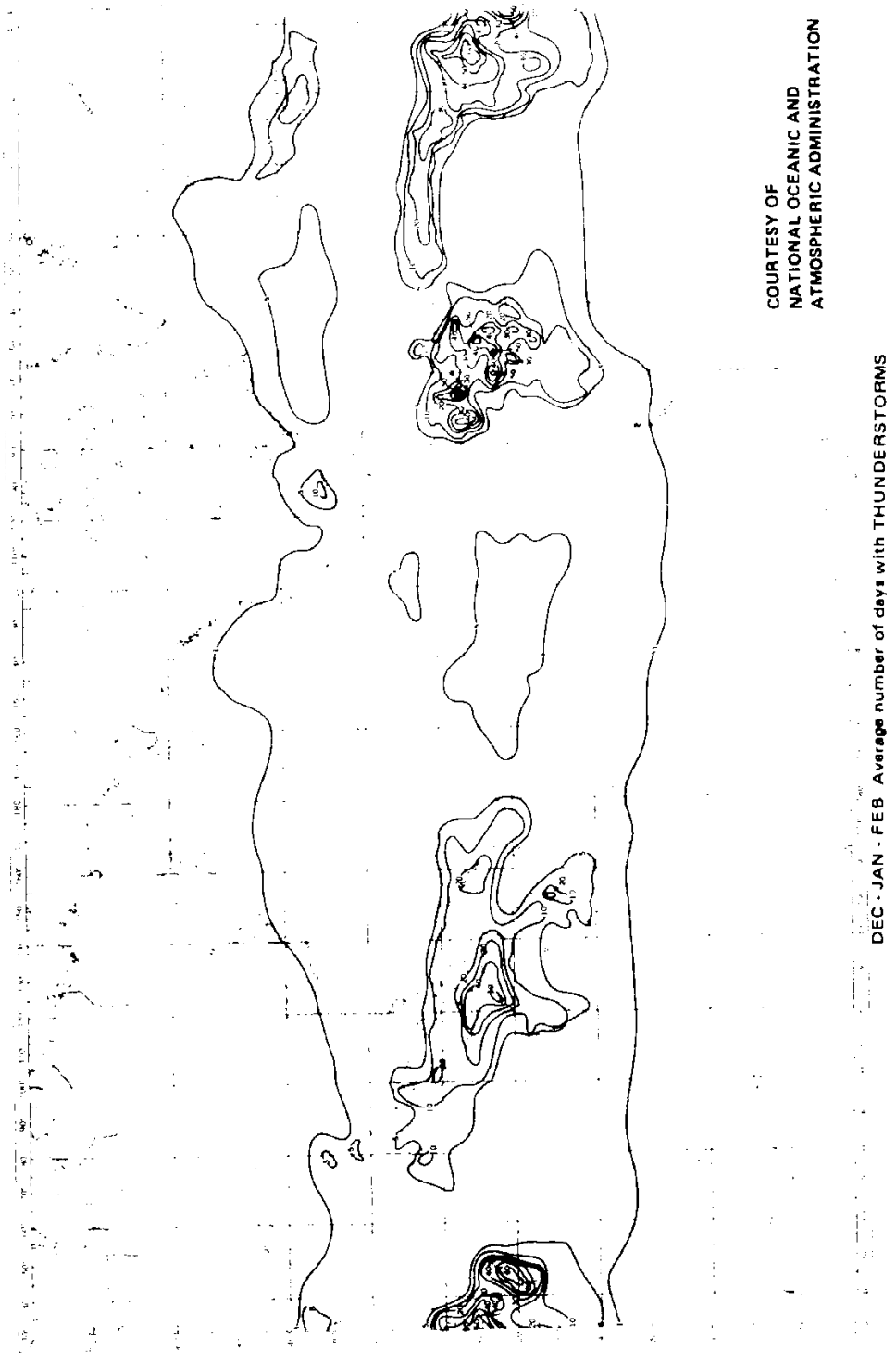

Figure 3-3. Worldwide Isokeraunic Map (Sheet 1 of 4)

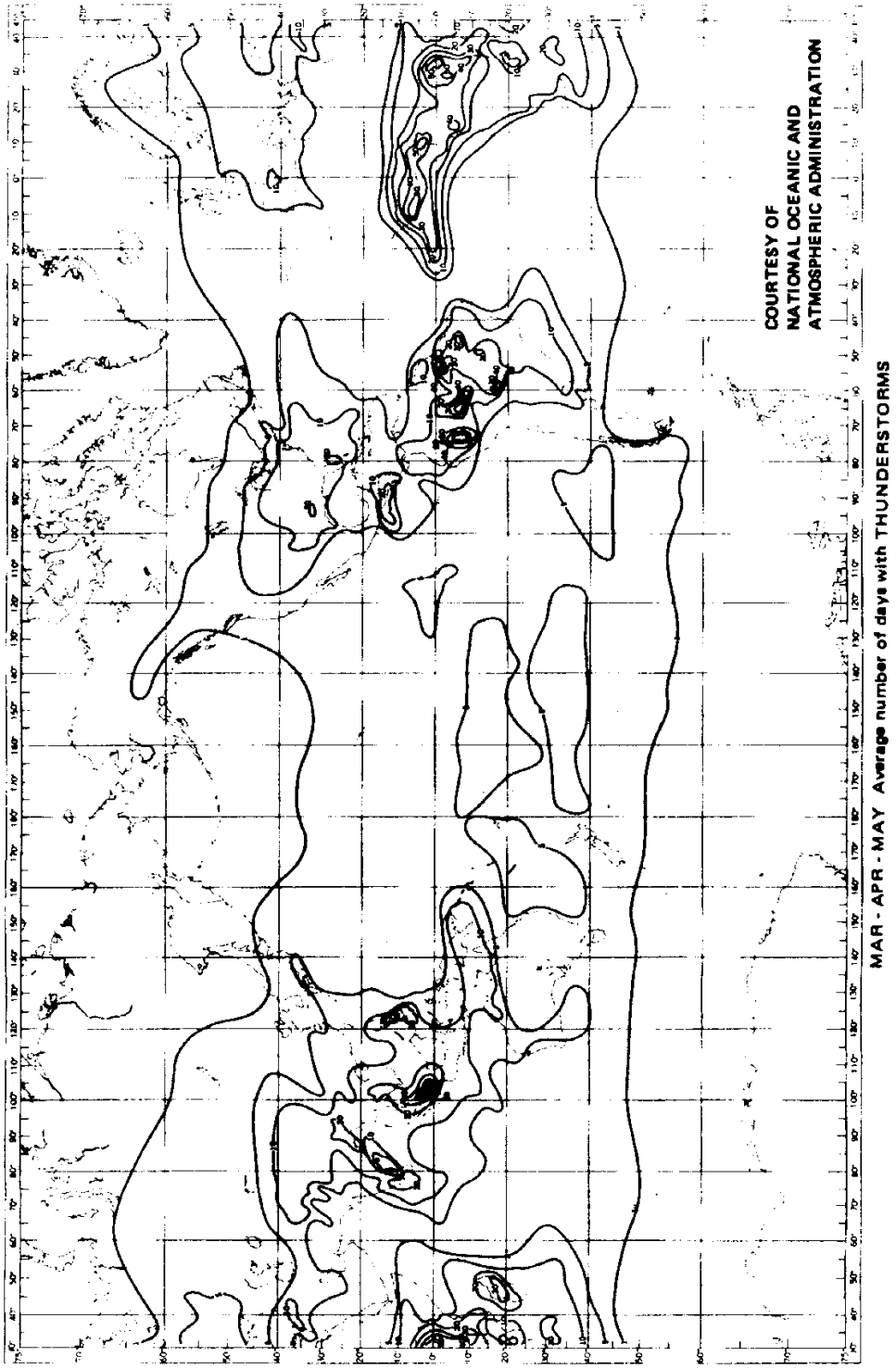

Figure 3-3. Worldwide Isokeraunic Map (Sheet 2 of 4)

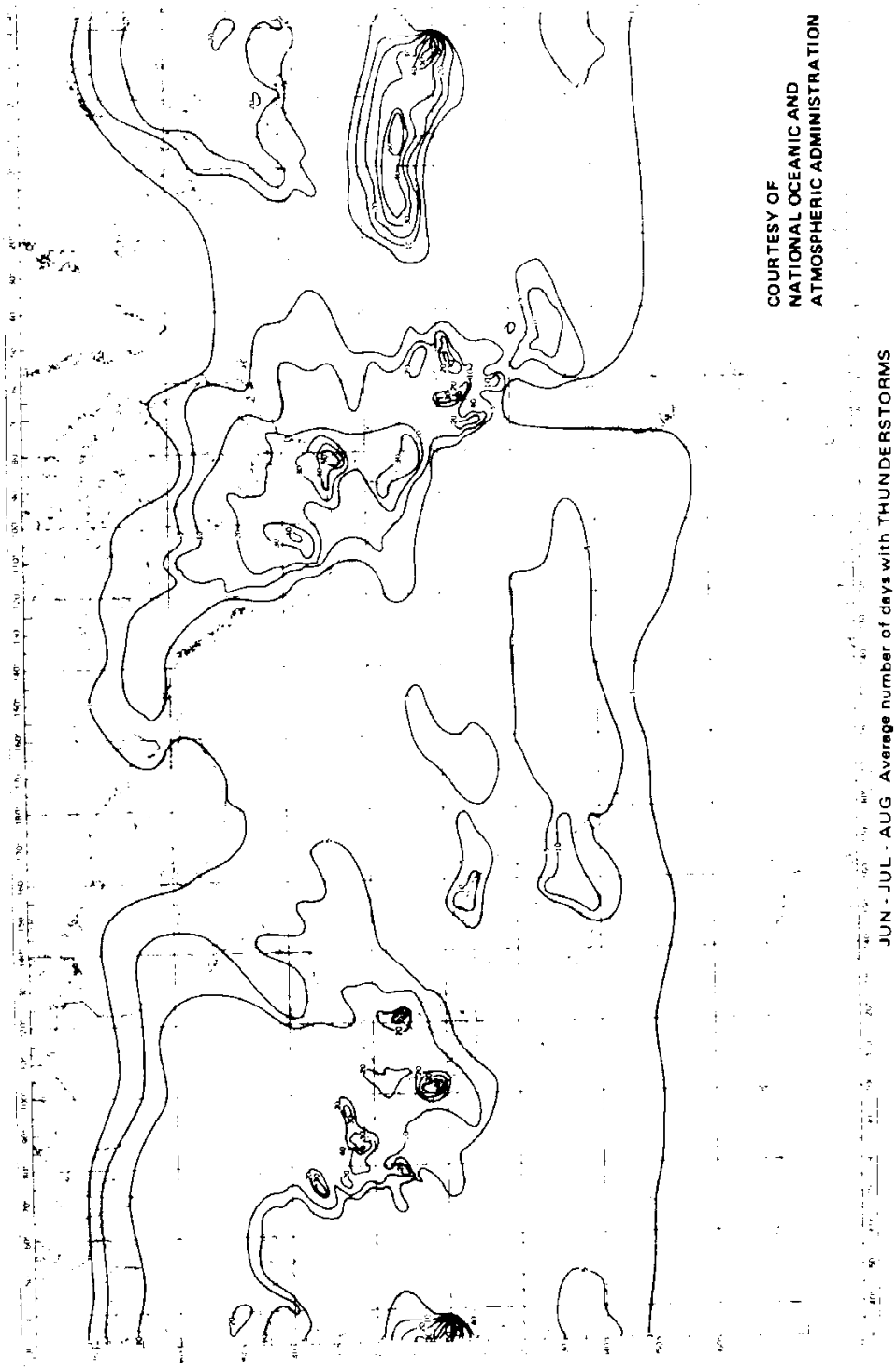

Figure 3-3. Worldwide Isokeraunic Map (Sheet 3 of 4)

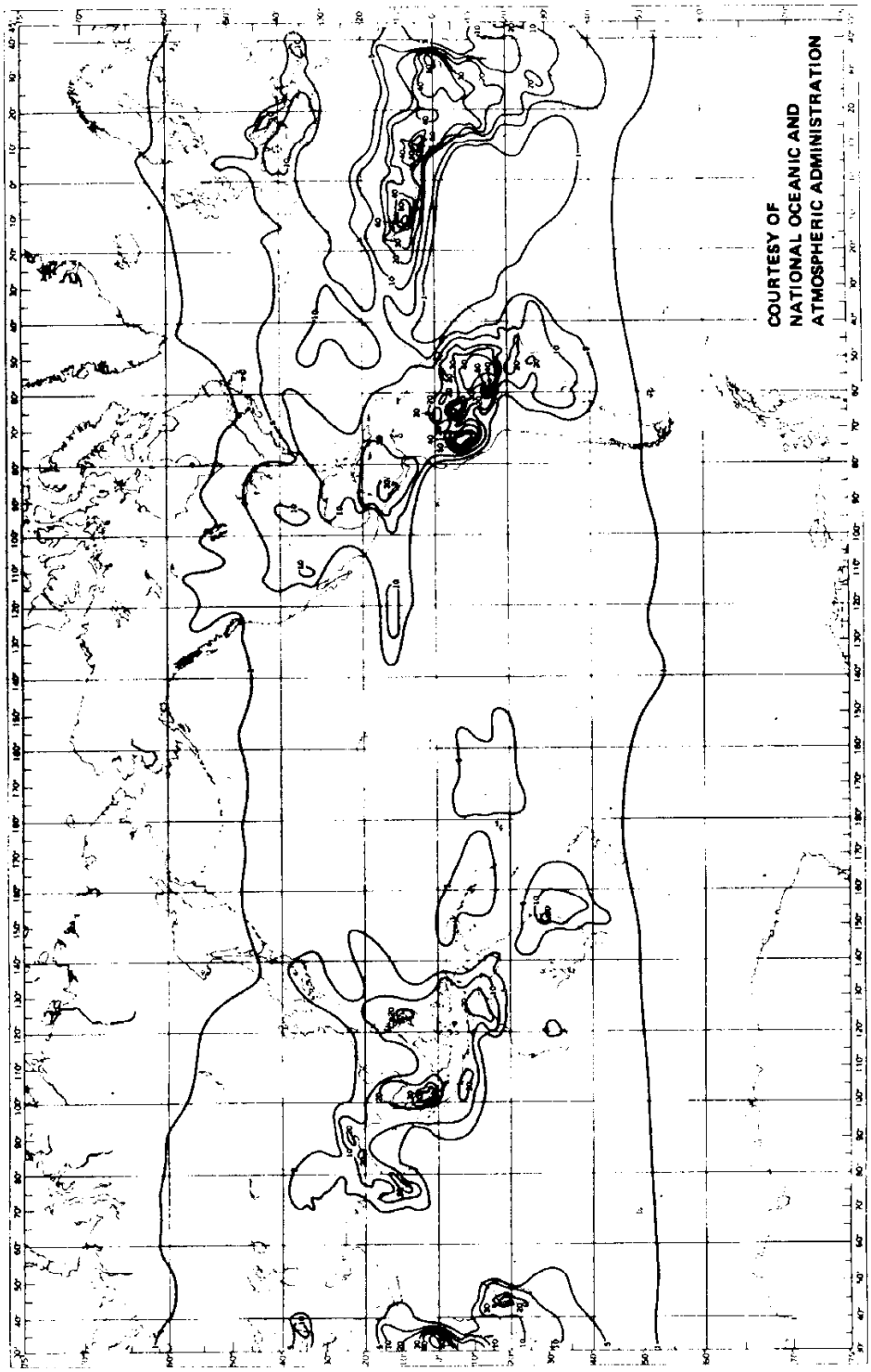

SEP - OCT - NOV Average number of days with THUNDERSTORMS

Figure 3-3. Worldwide Isokeraunic Map (Sheet 4 of 4)

where T_γ is the number of thunderstorm days per year. Out of the total number of flasshes per unit area, the number of discharges increases with increasing geographical latitude (3-7). The proportion, p, of discharges that go to ground in relation to the geographical latitude, Λ, can be represented (3-8) as:

$$p = 0.1\,[1 + (\Lambda/30)^2] \tag{3-2}$$

Thus in a given location the flash density, σ_{yg}, i.e., the number of discharges to earth per square kiIometer per year, is:

$$\sigma_{yg} = p\sigma_y \tag{3-3}$$

To calculate σ_{yg}, for a specific location, first determine T_y from the isokeraunic map of Figure 3-2 to Figure 3-3. For estimation purposes, the number of thunderstorm days at points between lines may be determined by interpolation. Using this value of T_y, calculate the total flash density with Equation 3-1. Next obtain the geographical latitude of the site from a map of the area and calculate p from Equation 3-2. Then determine the number of strikes to earth per year per square kilometer with Equation 3-3.

3.5 ATTRACTIVE AREA. The concept of attractive area reflects the principle that an object extending above its surroundings is more likely to be struck by lightning than its actual cross-sectional area might otherwise indicate. For example, thin metallic structures such as flag poles, lighting towers, antennas, and overhead wires offer a very small cross-sectional area relative to the surrounding terrain but ample evidence exists to show that such objects apparently attract lightning.

3.5.1 Structures Less Than 100 Meters High.

For structures less than 100 meters (330 feet) in height, and which therefore do not normally trigger lightning, the number of strikes increases according to a power of h, the structure height. An expression that represents the attractive radius, r_a, in meters of a structure is (3-5) ;

$$r_a = 80\sqrt{h}\,(e^{-0.02h} - e^{-0.05h}) + 400\,(1 - e^{-0.0001h^2}) \tag{3-4}$$

where h is in meters. For a structure 10 meters high, Equation 3-4 given an attractive radius of 57.7 meters; similarly, the attractive radius for a 100-meter high structure is 356 meters. The attractive area, A_a, is πr_a^2. Thus A_a for a 10-meter structure is approximately 0.01 square kilometer, while the attractive area of a 100-meter structure is 0.4 square kilometer.

Equation 3-4 has been found to adequately describe the number of strikes to objects which are not tall enough to trigger lightning. For taller structures, a multiplication factor (3-5)

$$F_T = 1 + 2^{(9-1500/h)} \qquad \text{(h in meters)} \tag{3-5}$$

should be applied to Equation 3-4. The experimental data to justify the use of Equation 3-5 for structures greater than 400 meters (1300 feet) is sketchy. However, since structures even approaching this height are not expected to be of primary concern, Equations 3-4 and 3-5 are expected to be adequate for most design purposes.

Large flat buildings that do not extend above the median treetop level in the general area will have an attractive area that is essentially the area of the roof (assuming the roof covers the entire structure). If the building is several stories high such that it appreciably extends above the prevailing terrain, then its attractive area is its roof area plus that portion of the attractive area not already encompassed by the roof. Figure 3-4 illustrates the method for calculating the attractive area of a rectangular structure of length, ℓ, and width, w. The roof area is given by ℓ x w. The additional attractive area resulting from the height of the building is readily determined by recognizing that the areas contributed by the four corners of the building equal a circle of radius, r_a. Both ends of the structure (dimension w) contribute the area of 2 wr_a; the sides contribute $2\ell r_a$. The total attractive area is the sum of the roof area (ℓw), the corners (πr_a^2), the ends (2 wr_a), and the sides ($2\ell r_a$) to produce a total of

$$A_a = w\ell + \pi r_a^2 + 2r_a(w+\ell). \tag{3-6}$$

Figure 3-5 indicates that the height to be used in calculating the attractive area of a tall structure should be the height that the structure extends above the effective (i. e., the level that earth charges would rise to if the building were not there) levels of the earth. On open, level terrain the height, h, would be the full height of the roof from grade level.

The number of flashes which can be expected to strike a given structure is equal to the product of the flash density, σ_{yg}, times the attractive area, A_a, of the structure. For example, suppose the relative likelihood of a lightning strike to a low, flat structure 100 meters on a side, located in Nashville, TN, is desired. From Figure 3-2, T_y is determined to be approximately 54 thunderstorm days per year. The flash density as given by Equation 3-1 is 20.4 flashes/km^2/year. The proportion of those flashes that are discharges to earth is 24.4 percent (from Equation 3-2) since the latitude is 36 degrees. Thus approximately 5 flashes/km^2/year to earth can be expected. Within the area of the structure (0.01 km^2) there will be only 0.05 strikes per year on the average, or there is a 1 in 20 chance of being struck by lightning in a given year. For the same structure in Southern California, only a 1 in 330 likelihood of a strike would be expected in a given year.

3.5.2 Cone of Protection.

This ability of tall structures or objects to attract lightning to themselves serves to protect shorter objects and structures. In effect, a taller object establishes a protected zone around it. With this protected zone, other shorter structures and objects are protected against direct lightning strikes. As the heights of these shorter objects increase, the degree of protection decreases. Likewise, as the separation between tall and short structures increases, the protection afforded by the tall structure decreases. The protected space surrounding a lightning conductor is called the zone (or cone) of protection.

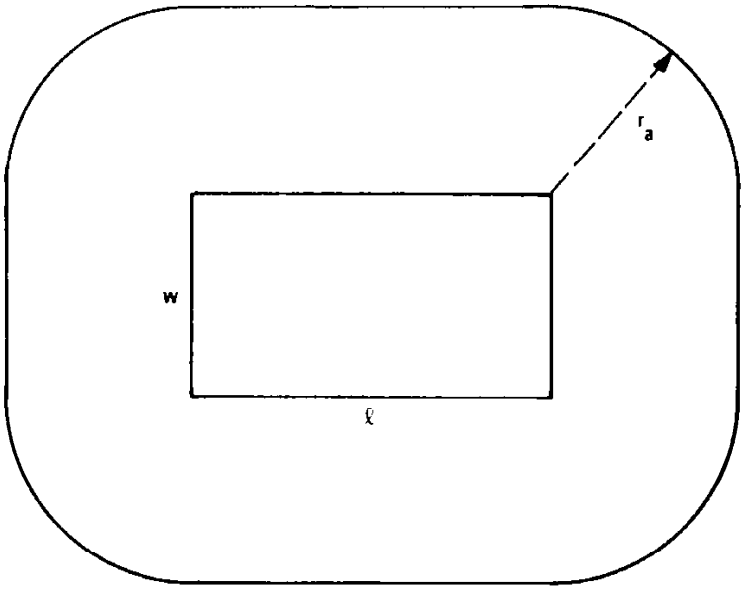

TOTAL ATTRACTIVE AREA: $A_a = w\ell + \pi r_a^2 + 2r_a(w + \ell)$

r_a IS DETERMINED BY EFFECTIVE HEIGHT, h. SEE EQUATIONS 3-4 AND 3-5.

Figure 3-4. Attractive Area of a Rectangular Structure

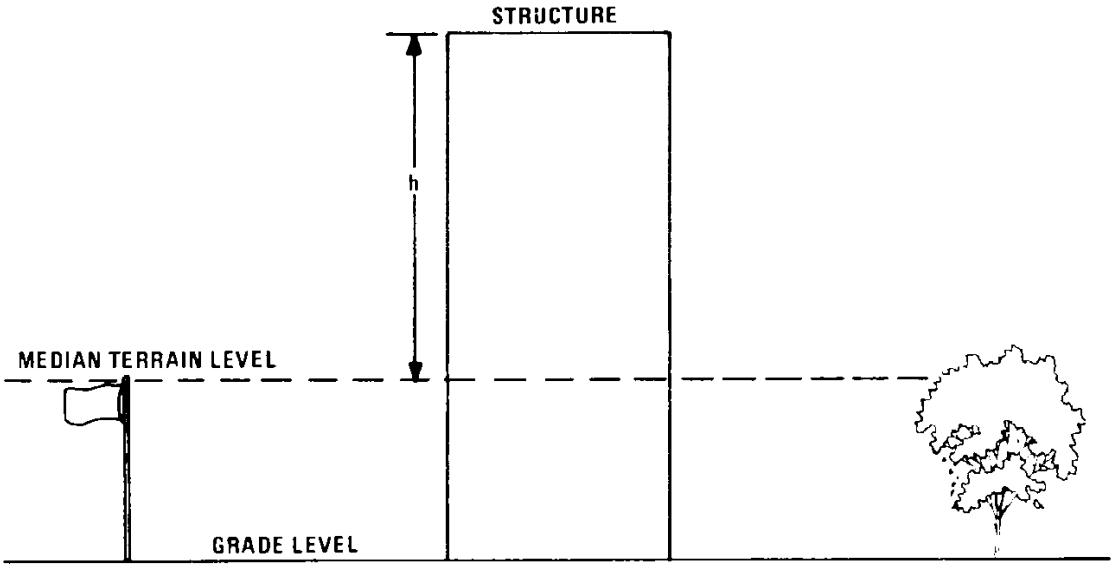

Figure 3-5. Effective Height of a Structure

The zone of protection provided by a grounded vertical rod or mast is conventionally defined as the space enclosed by a right circular cone with its axis coincident with the mast and its apex at the top of the mast as illustrated by Figure 3-6(a). Similarly, the zone protected by a grounded horizontal overhead wire is defined as a triangular prism with its upper edge along the wire as illustrated in Figure 3-6(b). In either case, the zone (or cone) of protection is expressed as the ratio of the horizontal protected distance, D, to height, H, of the mast or wire. This ratio is the tangent of the shielding angle, α*. Some commonly recommended zones of protection and the associated shielding angles are illustrated in Figure 3-7.

The NFPA Lightning Protection Code (3-9) recommends that a 1:1 zone of protection (α = 45°) be provided in important areas while a 2:1 zone (α = 63°) is acceptable for less important areas. The British Standard Code of Practice (3-10) states that a shielding angle of 45 degrees provides an acceptable degree of protection for ordinary structures, but that for structures with explosive or high flammable contents the shielding angle should not exceed 30 degrees.

Although the existence of a 1:1 zone of protection does not absolutely guarantee immunity to lightning, documented cases of the 1:1 zone being violated are very few. Thus for all facilities except those associated with the storage of explosives or fuels, a 1:1 zone of protection can safely be used as a basis of design of lightning protection systems. As such, C-E facilities or equipments (antennas, etc.) located entirely within the 1:1 zone of protection generally are not required to have separate air terminals. This does not eliminate the need to ground metal shelters or to meet the grounding requirements of the subsystems which comprise the facility ground system. If more than one rod or wire is used, the protected zone is somewhat greater than the total of all of the 1:1 zones of the rods or wires considered individually. For adjacent structures, the Codes specify that a 2:1 zone of protection may be assumed for the region between the structures.

Large structures with flat or gently sloping roofs do not lend themselves to the straightforward application of the 1:1 or 2:1 zone of protection principles. To establish even 2:1 type coverage on large buildings, exceptionally tall air terminals would be required. Experience, however, shows that extremely tall terminals are not needed for effective protection. Both the NFPA Lightning Protection Code and UL Master Labeled Protection System (3-11) specify air terminals that extend from 10 to 36 inches above the object to be protected. (The British Standard Code of Practice does not require the use of air terminals at all.)

3.6 LIGHTNING EFFECTS.

3.6.1 Flash Parameters.

During the short interval of a lightning flash, several discharges occur. The sequence of events in a multiple-stroke flash is illustrated in Figure 3-8. The initial path for the discharge is established in 50 microseconds. Intermediate return stroke currents of about 1 kA follow the initial return stroke and last for a few milliseconds. Subsequent strokes occur at intervals of 50 to 60 milliseconds. The return stroke interval may include a continuing current of 100 A or so which flows for several milliseconds or until the start of the next return stroke.

---

*The shielding angle is defined as the angle between the surface of the cone and a vertical line through the apex of the cone, or between the side of the prism and the vertical plane containing the horizontal wire.

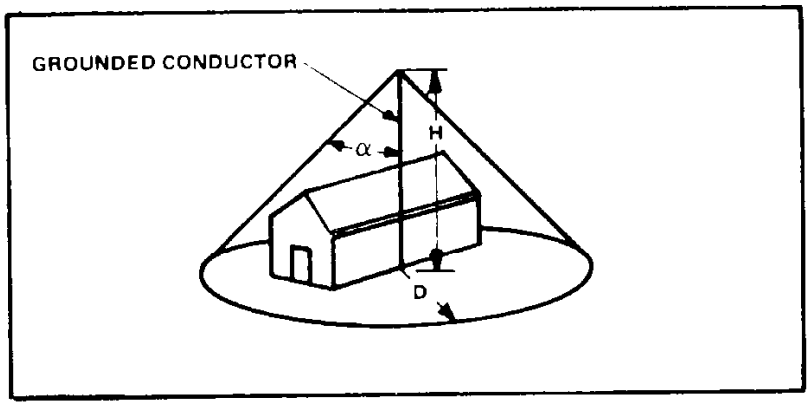

(a) CONE OF PROTECTION PROVIDED BY A VERTICAL GROUNDED CONDUCTOR OF HEIGHT H.

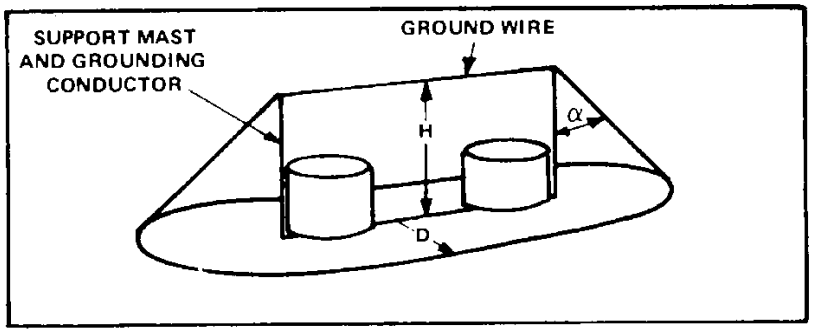

(b) ZONE OF PROTECTION PROVIDEDBY A HORIZONTAL AERIAL GROUND WIRE AT HEIGHT H.

Figure 3-6. Zones of Protection Established by a Vertical Mast and a Horizontal Wire

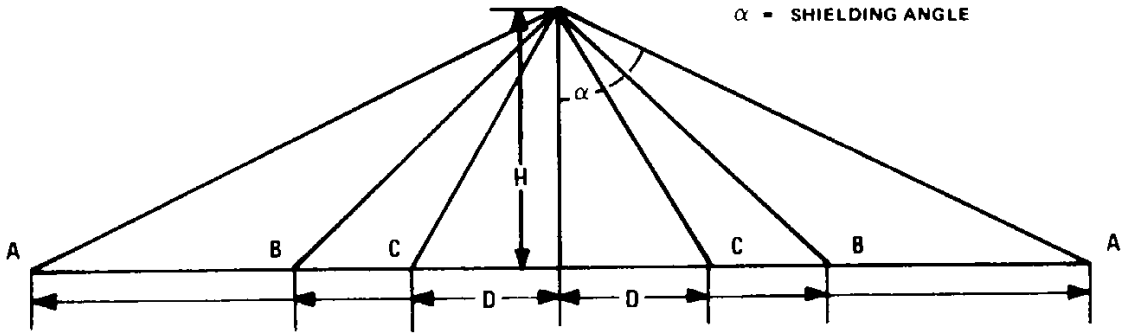

ZONE	D/H	α	REFERENCE	RECOMMENDED FOR
AOA'	2/1	63°	NFPA 78	ORDINARY CASES
BOB'	1/1	45°	NFPA 78 BRITISH CODE	IMPORTANT CASES ORDINARY STRUCTURES
COC'	0.58/1	30°	BRITISH CODE	CRITICAL STRUCTURES

Figure 3-7. Some Commonly Used Lightning Shielding Angles

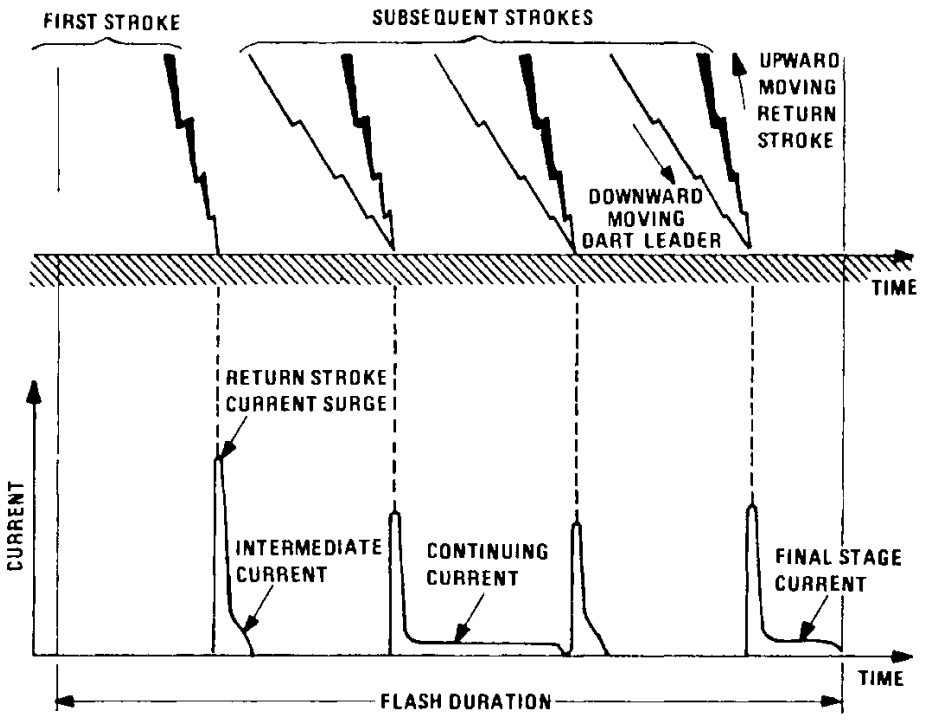

Figure 3.8. Illustration of Process and Currents Which Occur During a Lightning Flash to Ground

The lightning discharge involves the transfer of large amounts of electric charge between the cloud and the earth. The typical flash transfers 15 to 20 coulombs (C) (1 coulomb equals 6.2 x 10^{18} electrons) with some flashes involving as much as 400 coulombs of charge. The energy per flash of lightning has been estimated to be as high as 10^{8} watt-seconds. Table 3-1 summarizes the range of values for selected lightning parameters.

3.6.2 Mechanical and Thermal Effects.

The fast rise time, high peak amplitude current of the stroke can produce severe mechanical, thermal, and electrical effects. The damage caused by these currents to objects in the discharge path is closely related to the relative conducting power of the object. For example, metals generally receive a discharge with little damage. In most cases, even slender conductors such as telephone and electric power cables handle the current without fusing (melting) except at the point where the current enters or leaves the metal (where severe damage may occur). Very strong discharges of high peak current (> 40 kA) and high coulomb values (>200 C), however, can melt or burn holes in solid metal plates. This burning effect is not usually of primary concern for a typical building or structure because, if an adequate protection system is installed, the principle effect will be a small deformation at the tip of a lightning rod or a small melted area on the intercepting cable. Such effects are of more concern where flashes to airplanes occur because such burning can perforate the fuselage to cause loss of pressurization or penetrate the skin of fuel tanks and possibly ignite fuels. The burning or melting also presents a threat to exposed tanks of volatile gases or fuels on the ground.

Table 3-1

Range of Values for Lightning Parameters (3-5)

Parameter	Minimum	Typical	Maximum
Number of return strokes per flash	1	2 to 4	26
Duration of flash(s)	0.03	0.2	2
Time between strokes (ms)	3	40 to 60	100
Peak current per return stroke (kA)	1	10 to 20	250
Charge per flash (C)	1	15 to 20	400
Time to peak current (μs)	<0.5	1.5 to 2	30
Rate of rise (kA/μs)	<1	20	210
Time to half-value (μs)	10	40 to 50	250
Duration of continuing current (ms)	50	150	500
Peak continuing current (A)	30	150	1600
Charge in continuing current (C)	3	25	330

Because of the duration of the currents that flow for the extended intervals between return strokes, they are most likely to cause damage by melting or igniting solid materials. In contrast, the short-duration high-current peaks tend to tear or bend metal parts by the electromagnetic forces that develop in proportion to the square of the instantaneous current, Though potentially hazardous, the damage caused by mechanical forces in metallic conductors is generally of secondary importance in most situations. However, because of the presence of these mechanical forces, it is necessary that lightning rods, down conductors, and other elements of the protection system be securely anchored.

On the other hand, when insulating or semi-insulating material receives a discharge, an explosive reaction may occur with severe damage. Trees, for instance, whether dry or green, are in many cases split or stripped of their bark, and the damage can extend underground to their roots. Related damage may occur to other unprotected wooden structures or objects such as flag poles, masts, or light supports, and electric and telephone poles. When lightning strikes a wooden building, the stroke seeks out the lowest impedance path to earth which is probably through the electric wiring or water pipes. Often in order to reach these metallic paths, the discharge must pass through some type of wooden barrier. In penetrating such barriers, extensive explosive damage usually results.

Brick, concrete, marble, and other masonry materials are also frequently shattered or broken loose at the point where the discharge passes through them. Such damage will occur where structural steel support members or steel reinforcing rods are encased in concrete or sheathed in brick or marble and the structure has an inadequate protective system. The explosive effect can dislodge materials with considerable force -- force sufficient to hurl relatively large pieces several meters. One explanation of the explosive force is that it is the result of the virtually instantaneous vaporization of the water present in the wood or entrapped in the masonry materials.

3.6.3 Electrical Effects.

Lightning discharges to or near the buildings and structures frequently cause damage to electrical and electronic equipment. Melting or burning of conductors occurs at the point of interception of the stroke. The voltages developed by the fast risetime, high amplitude current pulse are frequently high enough to break down insulation, pose personnel hazards, and cause component and device failure. These voltages are produced by:

a. IZ (current x impedance) drop resulting from the lightning pulse traveling down power lines or signal lines, through structural members, along down conductors or overhead ground wires or through the resistance of the earth connection;

b. Magnetic induction; and

c. Capacitive coupling.

Lightning surges in power, signal, and control circuits are generally the result of some combination of these three components.

3.6.3.1 Conductor Impedance Effects.

Because of the fast risetime (1 to 2 µsec) and high amplitude (10 to 20 kA) characteristics of the current pulse produced by the lightning discharge, the inductance and resistance of even relatively short conductors causes extremely high voltages to be developed on the conductor. The voltages frequently are high enough to exceed the breakdown potential of air or other insulation materials and cause flashover to other conductors or breakdown of insulation. The resistive IR drop generated by 20 kA in a 30 meter (100 feet) run of down conductor conforming to NFPA-78 ($2.88 \times 10^{-4}\,\Omega/m$) will be

$$V = 2 \times 10^{4} \times 2.88 \times 10^{-4} \times 30 = 173 \text{ volts} \qquad (3\text{-}7)$$

which is not sufficient to cause flashover or to pose a serious threat to personnel.

For a down conductor length of 30 meters (100 feet), the smallest copper conductor meeting the minimum requirements of the Lightning Protection Code or the UL Master Labeled Lightning Protection System has a diameter of 0.894 cm (0.352 inches). Assuming that the conductor is a straight round wire, the inductance can be determined from (see Section 5.2.2.3):

$$L = 0.002\,\ell\,\left(2.303 \log \frac{4\ell}{d} - 0.75\right), \qquad (2\text{-}8)$$

where L is the total inductance in microhenries, ℓ is the length in cm, and d is the diameter in cm. A 30-meter length of conductor will exhibit an inductance of 52.5 microhenries.

The voltage, V, developed across an inductance is given by

$$V = L\ di/dt, \tag{3-9}$$

where L, is the inductance in henries and di/dt is the rate of change of the current through the inductor in amperes per second. From Table 3-1, the rate of rise of the typical lightning stroke is 20 kA/ µs which corresponds to a di/dt of 2×10^{10} amps/second. Thus the voltage developed by the discharge pulse through the 30-meter (100 foot) downconductor is

$$v = 5.25 \times 10^{-5} \times 2 \times 10^{10} = 1.05 \times 10^{6} \text{ volts}. \tag{3-10}$$

Although the duration of this voltage is typically less than 2 microseconds, the voltage generated is high enough to cause flashover to conducting objects located as much as 35 cm (14 in.) away from the down conductor. It is for this reason that metallic objects within 6 feet of lightning down conductors should be electrically bonded to the down conductors.

3.6.3.2 Induced Voltage Effects.

In addition to the lightning effects discussed above, circuits not in direct contact with the lightning discharge path can experience damages even in the absence of overt coupling by flashover. Because the high current associated with a discharge exhibits a high rate of change, voltages are electromagnetically induced on nearby conductors. Experimental and analytical evidence (3-12) shows that the surges thus induced can easily exceed the tolerance level of many components, particularly solid state devices. Surges can be induced by lightning current flowing in a down conductor or structural member, by a stroke to earth in the vicinity of buried cables, or by cloud-to-cloud discharges occurring parallel to long cable runs, either above ground or buried (3-2).

Consider a single-turn loop parallel to a lightning down conductor such as that shown in Figure 3-9. The voltage E magnetically induced in the loop is related to the rate of change of flux produced by the changing current in the down conductor (see Section 6.2.2.1). The voltage induced in the loop is dependent upon the dimensions of the loop (ℓ, $r_2 - r_1$), its distance from the down conductor (r_1), and the time rate of change of the discharge current (di/dt). Figure 3-10 is a plot of normalized voltage per unit length that would be developed in a single turn loop of various widths.

These results suggest the steps that should be taken to minimize the voltage induced in signal, control, and power lines by lightning discharges through down conductors. First, since no control can be exercised over di/dt because it is determined by the discharge itself, E must be reduced by controlling ℓ, r_1 and r_2. The variable ℓ, is a measure of the distance that the loop runs parallel to the discharge path; thus, by restricting ℓ, the induced E can be minimized. Thus cables terminating in devices or equipments potentially susceptible to voltage surges should not be run parallel to conductors carrying lightning discharge currents if at all possible. If parallel runs are unavoidable, Figure 3-10 also shows that the distance, r_1, between the loop and the lightning current path should be made as large as possible.

Another observation to be made from Figure 3-10 is that r_2 minus r_1 should be as close as possible to zero. In other words, the distance between the conductors of the pickup loop should be minimized. One common way of reducing this distance is to twist the two conductors together such that the average distance from each conductor to the discharge conductor is the same.

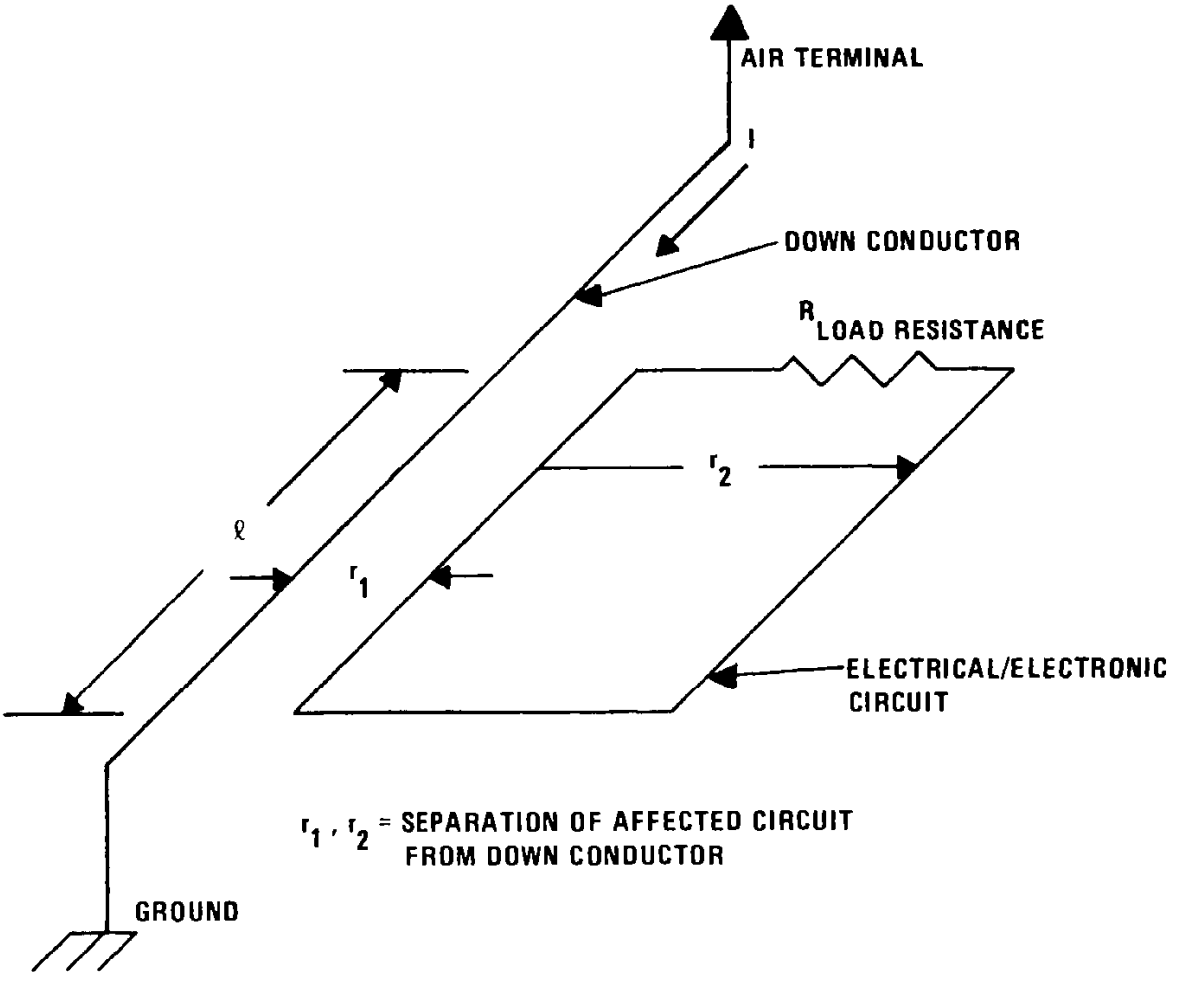

Figure 3-9. Inductive Coupling of Lightning Energy to Nearby Circuits

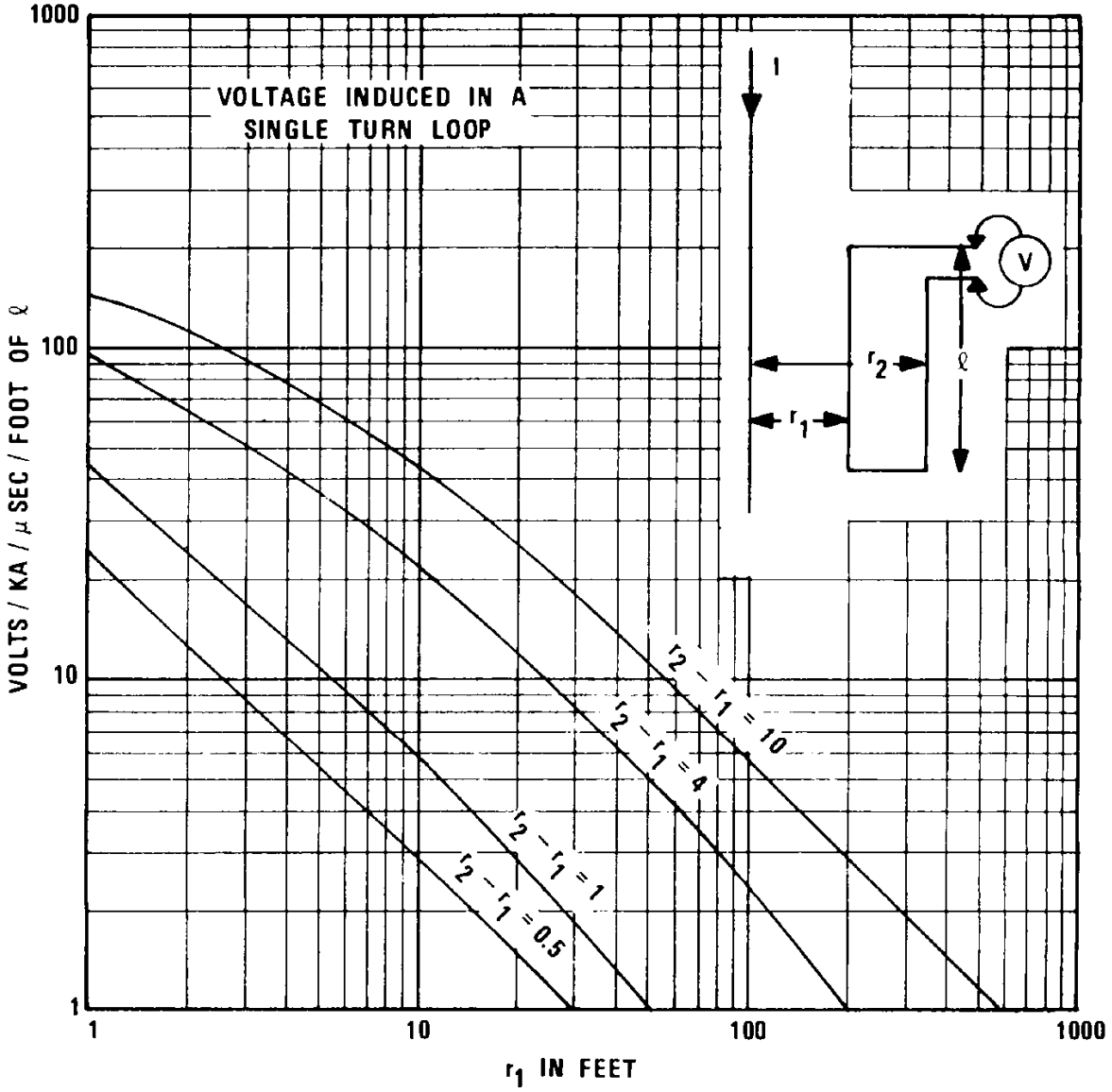

Figure 3-10. Normalized Voltage Induced in a Single-Turn Loop by Lightning Currents

Another protective measure is to reduce the flux density within the pickup loop by providing magnetic shielding. Because the coupling field is primarily magnetic in nature, a shielding material having a high permeability such as iron or nickel should be used. For shielding against lightning-produced fields, steel conduit or cast iron pipe are much more effective than aluminum or other non-ferrous materials.

3.6.3.3 Capacitively-Coupled Voltage.

Prior to the lightning discharge, an electric charge slowly accumulates on earth-based objects in the vicinity of the electrified clouds. This increase in charge occurs slowly enough so that the potential of grounded conductors does not change appreciably with respect to the earth, even when the impedance to ground is high. When the lightning stroke terminates on a structure or other point having contact with the earth as illustrated in Figure 3-11, the charge on all grounded objects nearby suddenly becomes redistributed. The redistribution of charge produces a current flow through the grounding impedance of the grounded objects and produces a voltage across that impedance.

Referring to Figure 3-11, the voltage between the conducting objects and the ground can be expressed as

$$E = \frac{Q}{C} e^{-t/RC} \tag{3-11}$$

where Q is the stored charge in coulombs, C is the total capacitance to ground in farads, R is the effective resistance to ground in ohms, and t is the elapsed time in seconds from the occurrence of the stroke.

Equation 3-11 shows that if the product RC is small, the exponential term will be large (for a time t on the order of 10 μs), thus making the voltage capacitively induced on any reasonably well-grounded object quite small for a typical lightning stroke.

3.6.3.4 Earth Resistance.

Consider a facility such as the one illustrated in Figure 3-12, that has more than one possible electrical path to earth. For example, a ground rod is driven into the earth at the transformer pole or at the service entrance to Building 1. The resistance, R_{G1}, of this rod could be 25 ohms or higher and still conform to NEC requirements. Metal utility pipes such as water lines generally offer a relatively low resistance (labeled R_{G2}) to earth. (In soils of high resistivity the point of effective contact between utility pipes may be an appreciable distance from the facility.) Empirical data indicates that the grounding resistance offered by water pipes is on the order of 1 to 3 ohms. If the electrical ground is not connected to the water pipe, a lightning strike to the ground wire of the electrical distribution system could produce a potential difference high enough to possibly produce an arc between the electrical ground (including the equipment cabinet and the building's structure, if connected) and the utility piping. A definite personnel hazard would then exist because of the high voltage that would be developed between the equipment and building ground and pipes. Because of this reason as well as the requirement to prevent analogous hazards from existing during power system faults, MIL-STD-188-124A requires electrical safety grounds be connected to the metallic water system in the building and recommends they also be directly connected to the ground rod at the transformer.

If R_{G1} is 25 ohms while R_{G2} is only 1 ohm or so, then a lightning strike as indicated could easily cause the potential of the overhead ground wire to become high enough to produce an arc across the transformer windings and insulators. Since the low voltage secondary side offers a lower impedance to earth, it is the preferred path for the discharge,

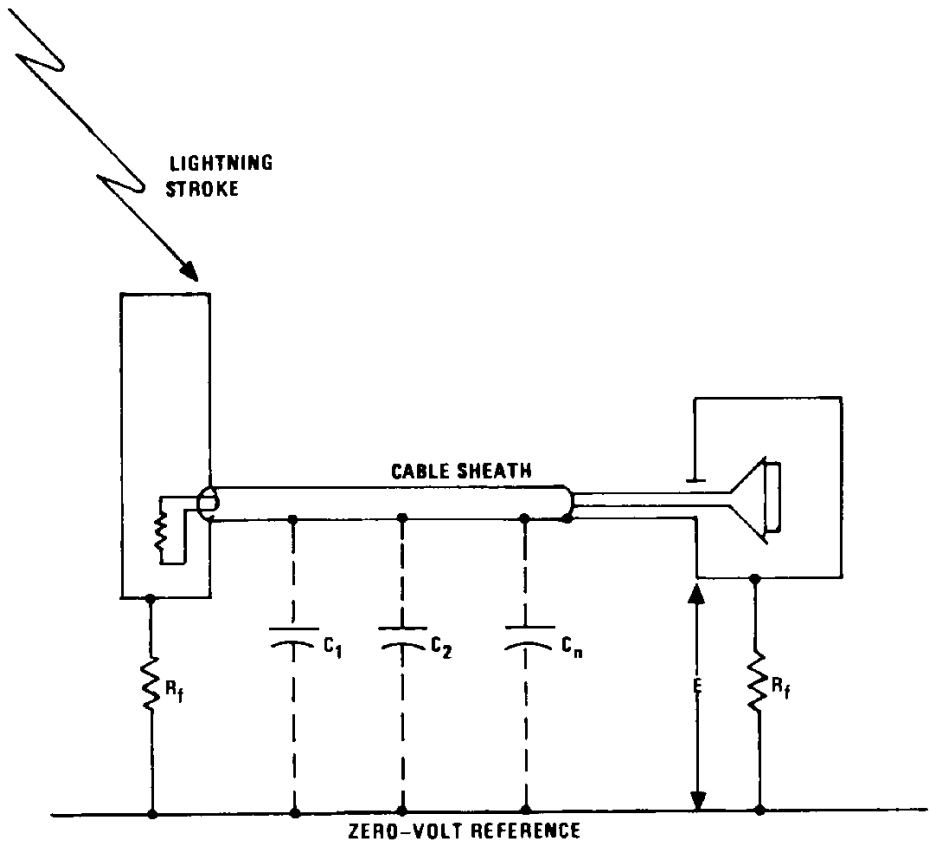

Figure 3-11. Capacitive Coupling of Lightning Energy

This type of lightning threat can be minimized by (1) reducing R_{G1} to approximately the magnitude of R_{G2}, (2) the installation of appropriate lightning arresters at the transformer to keep the potential difference between the power conductors and the ground wire and between the primary and secondary windings to within the stress ratings of the transformer, and (3) interconnecting the earth electrode subsystem (to include the water and ether utility pipes) with a 1/0 or larger buried copper cable as illustrated by the dotted line in Figure 3-12.

Interconnecting the ground electrodes of the building and transformer pole to form one effective earth contact does not eliminate the lightning threat to the buried cable between the two buildings. As shown, the cable shield is connected to the cabinet, i.e., the building ground. In the event of a lightning strike as shown, Building 1 and its power supply system will be elevated in potential relative to Building 2. In particular, if the distance between the two buildings is more than just a few meters, the inductance, primarily, of the cable shield will prevent the cable from providing the low impedance necessary to keep the two buildings at the same potential. In addition if the shield of the cable is insulated from the earth, as is usually the case, the potential of the cable shield can become high enough with respect to the earth to exceed the breakdown of the insulation.

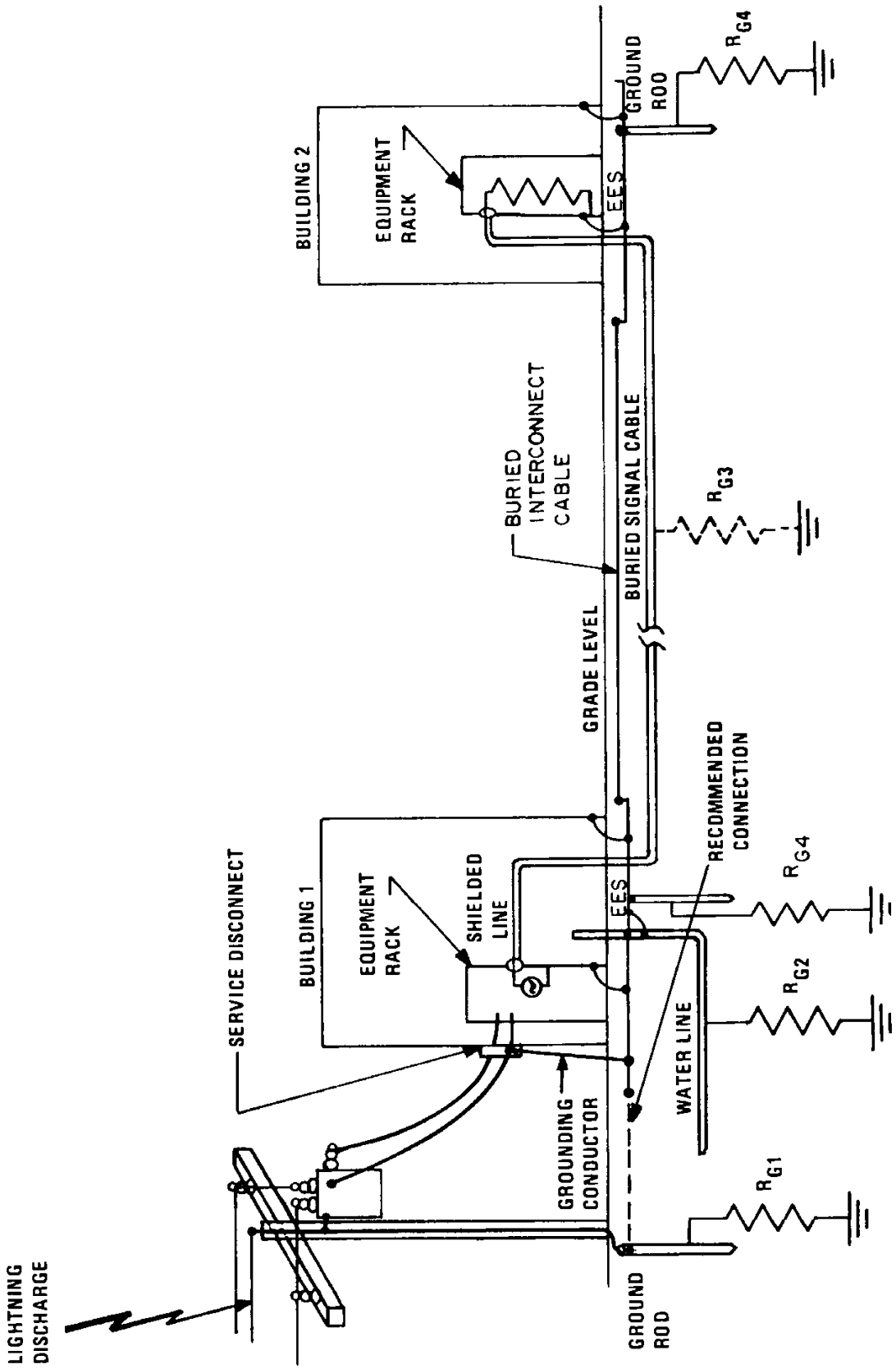

Figure 3-12. Coupling of Lightning Energy Through and Interconnected Facility

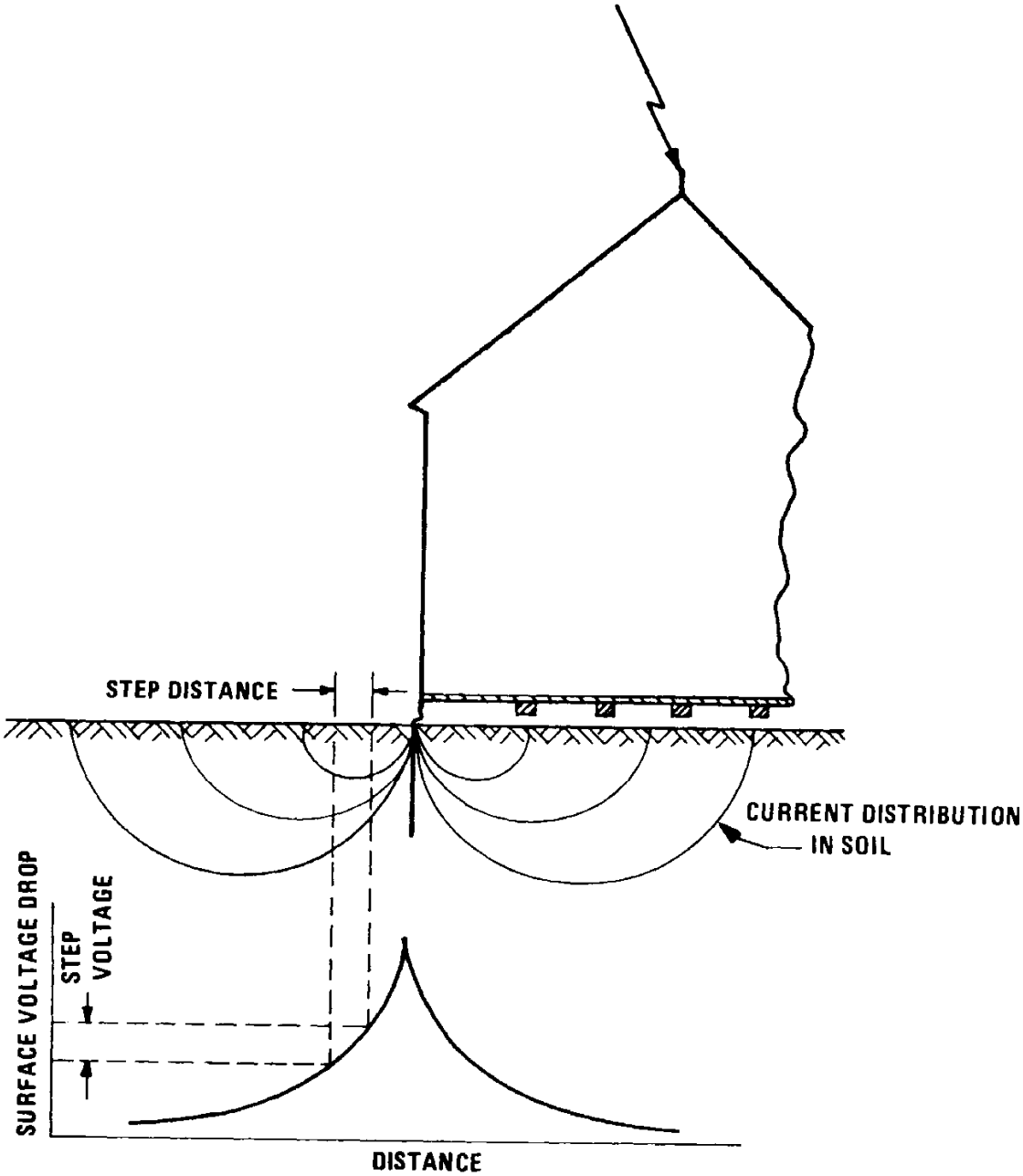

Figure 3-13. Step-Voltage Hazards Caused by Lightning-Induced Voltage Gradients in the Earth

Assume for the moment that Building 1 has an earth electrode subsystem consisting of ground rods interconnected with the cold water system with a net resistance to earth of 3 ohms. With a lightning discharge of 20 kA, the voltage of the complex will rise to 60 kV with respect to Building 2 and that portion of the earth not in the immediate vicinity of Building 1. At Building 1, the cable shield voltage will rise along with that of the building. This voltage pulse will travel down the cable, successively raising the shield potential to as much as 60 kV with respect to the surrounding earth. Such high voltages cause insulation breakdown in the form of tiny pinholes where the lightning energy punches through.

As the lightning pulse travels down the cable, its amplitude diminishes due to cable resistance and dielectric losses. However, the amplitude of the pulse can still be sufficient to damage circuit components in terminating equipment in Building 2. To minimize this damage, surge arresters compatible with the terminating components and hardware should always be provided on such cables. Further information on the use of surge arresters is presented in Volume II, Section 1.3.3.5.

In the event of a lightning stroke, there is a definite personnel hazard posed by the voltage gradient in the soil in the vicinity of the point where the lightning discharge enters the earth. In homogeneous soil, the current rapidly leaves the electrode. The current density is highest near the electrode and rapidly decreases with distance from the electrode. In soil of uniform resistivity, a significant voltage gradient will exist between two points that are differing distances from the electrode. Figure 3-13 illustrates the nature of this voltage variation and shows the hazard encountered by personnel walking (or standing) in the area. The voltage difference across the span of a step can be sufficient to be lethal. As shown earlier, the degree of the hazard is determined by the magnitude of the stroke current, the grounding resistance of the earth electrode, and the distance away from the electrode. No control can be exercised over the current; the threat, however, can be lessened by achieving a low common ground resistance and by minimizing the step potential as discussed in Section 2.8.1.3.

3.7 BASIC PROTECTION REQUIREMENTS.

To effectively protect a structure such as a building, mast, tower, or similar self-supporting object from lightning damage, the following requirements must be met:

a. An air terminal of adequate height, mechanical strength and electrical conductivity to withstand the stroke impingement must be provided to intercept the discharge to keep it from penetrating any nonconductive outer coverings of the structure or to prevent it from terminating on antennas, lighting fixtures, transformers, or other devices likely to be damaged or destroyed.

b. A low impedance path from the air terminal to earth must be provided.

c. The resistance of the connection between the discharge path and the earth must be low.

These requirements are met by either (1) an integral system of air terminals, roof conductors, and down conductors, securely interconnected to provide the shortest practicable path to earth, or (2) a separately mounted shielding system such as a metal mast which acts as an air terminal, and a down conductor or an overhead ground wire terminated at the ends (and at intermediate locations, if needed) with down leads connected to earth ground electrodes. Specific design practices are contained in Volume II.

3.8 DETERMINING THE NEED FOR PROTECTION.

The degree to which lightning protection is required, is a subjective decision requiring an examination of the relative criticalness of the structure location and its contents to the overall mission of the facility. Those structures containing elements vital to the operational mission such as air traffic control towers, radar installations, navigational aids, and communications centers are examples of facilities which obviously must be protected. However, every building or structure does not require that a lightning protection system be Installed. For example, buildings primarily used for the storage of nonflammable materials do not have a critical need for protection.

Three of the factors to consider in ascertaining whether a given structure should have a lightning protection system installed or in determining the relative comprehensiveness of the system are the relative threat of being struck by lightning, the type of construction, and the nature of the facility.

3.8.1 Strike Likelihood.

The relative likelihood of a particular structure being struck by lightning is a function of the keraunic level, i.e., the thunderstorm activity of the locality, the effective height of the structure and its attractive area. Average thunderstorm activity can be determined from the isokeraunic maps shown in Figures 3-2 and 3-3. Then using the techniques described in Section 3.4, estimate the frequency with which strikes to the structure may occur. Use this estimation as one of the inputs to the decision process.

3.8.2 Type of Construction.

Steel frame buildings with metal outer coverings offer the greatest inherent protection against lightning damage. Steel towers also exhibit a high immunity to structural damage. Additional protection for these type buildings will probably be required only for very critical facilities in highly exposed locations. Steel frame buildings with nonconductive, but nonflammable, outer coverings (like brick or other masonry) also offer a high degree of protection against lightning damage. The greatest hazard is posed by pieces of masonry being dislodged by stroke currents passing through the outer coverings to reach the structural steel underneath. Minimal protection consisting of interconnected air terminals to down conductors and steel support columns will be sufficient to prevent this type of structural damage.

Buildings constructed of nonconductive materials such as wood, concrete blocks, or synthetic materials are the most susceptible to destructive damage. A complete auxiliary protection system will be required to prevent lightning damage to buildings utilizing this type of construction.

3.8.3 Criticalness to System Mission.

If a strike to the facility poses a threat to human life, either to the occupants of the structure or to those persons whose safety is dependent upon reliable performance of the equipment and people inside the structure, comprehensive lightning protection should be definitely provided even in areas of low thunderstorm activity. At the other extreme, the need for the protection of buildings used primarily to store nonflammable or nonexplosive items is doubtful unless the stored items are critical to system operation, the building is usually exposed, etc. In between these extremes are those structures whose incapacitation would cause an inconvenience or present other difficulties short of life-and-death situations. With these structures, a careful analysis must be made to determine the relative likelihood of outages from lightning in comparison to normal equipment failures, downtime for maintenance, and other routine occurrences.

Though not directly related to the protection of electrical or electronic installations, Reference 3-10 is recommended for further guidance in performing the tradeoff analyses to determine the degree of lightning protection required for specific facilities.

3.9 APPLICABLE CODES.

The Lightning Protection Code, NFPA No. 78, issued by the National Fire Protection Association (3-9) contains the basic requirements for the minimization of personnel hazards in the event of a lightning strike to the structure.

The requirements of NFPA No. 78, however, are not sufficient to protect the electrical distribution system, signal and control cables, or sensitive electronic equipment from surges produced by either direct or indirect strokes. Thus additional steps such as providing lightning arresters on power lines and on outside signal and control cables, providing counterpoise cables for overhead and underground cables, providing comprehensive electromagnetic shielding on sensitive cables, and installing fast response surge protection devices on circuits exposed to lightning discharges should be taken. MIL-STD-188-124A refers.

3.10 REFERENCES.

3-1. M.A. Uman, Lightning, McGraw-Hill, New York NY (1969).

3-2. S.R. Crawford, et. al., "Final Report on Investigation of Lightning Hazard and Vulnerability at NHS," WDL-TR5103, Contract No. F04701-72-C-0024, Philco-Ford Corporation, Palo Alto CA 94303, 12 March 1973.

3-3. W.W. Lewis, The Protection of Transmission System Against Lightning, Dover Publications, Inc, New York, (1965).

3-4. "Lightning Protection for Saturn Launch Complex 39," Contract NASW-410, General Electric Company, Daytona Beach, Florida, 10 September 1963.

3-5. N. Cianos and E. T. Pierce, "A Ground-Lightning Environment for Engineering Usage," Contract L.S.-2817-A3, Stanford Research Institute, Melo Park CA, August 1972.

3-6. "World Distribution of Thunderstorm Days, "SMO/OMN No. 21, World Meteorological Association, Geneva, Switzerland, 1953.

3-7. E.L. Maxwell, et. al., "Development of a VLF Atmospheric Noise Prediction Model," Final Report, Contract N00014-69-C-1050, Westinghouse Georesearch Laboratory, Boulder CO 1970.

3-8. E.T. Pierce, "Latitudinal Variation of Lightning Parameters," J. Appl. Meterol., Vol 9, 1970, pp 194-195.

3-9. Lightning Protection Code, NFPA 78-1986, National Fire Protection Association, Battery march Park, Quincy MA 02269.

3-10. "The Protection of Structures Against Lightning," British Standard Code of Practice CP 326: 1965, British Standards Institution, London.

3-11. G. Comber, "A Transistorized Video Line System," IEEE Conference Publication, Vol 46, Pt 1, September 1968.

CHAPTER 4

FAULT PROTECTION SUBSYSTEM

4.1 FAULT PROTECTION. For effective fault protection, a low resistance path must be provided between the location of the fault and the transformer supplying the faulted line. The resistance of the path must be low enough to cause ample fault current to flow and rapidly trip breakers or blow fuses. The necessary low resistance return path inside a building is provided by the grounding (green wire) conductor and the interconnected facility ground network. An inadvertent contact between energized conductors and any conducting object connected to the grounding (green wire) conductor will immediately trip breakers or blow fuses. In a building containing a properly installed third-wire grounding network, as prescribed by MIL-STD-188-124A, faults internal to the building are rapidly cleared regardless of the resistance of the earth connection.

4.1.1 Power System Faults.

A power system fault is either a direct short or an arc (continuous or intermittent) in a power distribution system or its associated electrical equipment. These faults are hazardous to personnel for several reasons:

a. Fault currents flowing in the ground system may cause the chassis of grounded equipment to be at a hazardous potential above ground.

b. The energy in a fault arc can be sufficient to vaporize copper, aluminum, or steel. The heat can present a severe burn hazard to personnel.

c. There is a fire hazard associated with any short circuit or arc.

d. Burning insulation can be particularly hazardous because of the extremely toxic vapors and smoke which may be produced.

Some common causes of electrical system faults are:

a. Rodents getting between ground and phase conductors.

b. Water infiltration.

c. Moisture in combination with dirt on insulator surfaces.

d. Breakdown of insulation caused by thermal cycling produced by overloads.

e. Environmental contaminants.

f. Damage during installation.

g. System age deterioration.

Figure 4-1 illustrates how personnel hazards are developed by improper installation and fault conditions. Suppose that one phase of the 230-volt line accidentally contacts the motor frame. If the motor is not grounded, its frame will rise to 133 volts, and anyone coming in contact with it would be subject to a lethal shock if simultaneous contact is made with a grounded object. To prevent this situation from arising, the motor frame must be grounded via the green wire. The resistance of the fault path must be low enough to permit the fault current to trip the overload protector and interrupt the fault. If the resistance of the fault path is too large, the fault current will not be enough to trip the overload protectors. Thus to minimize both shock and fire hazards, the resistance of the fault path must be as low as possible. However, the fault protection subsystem normally does not depend on the earth electrode subsystem to trip overcurrent devices. The fault current normally flows through the green wire (grounding conductor) to the source side of the first service disconnect means where the green wire and the neutral are tied together. The fault current then flows through the neutral to the transformer to complete the circuit. This path functions completely independent of the connection to the earth electrode subsystem.

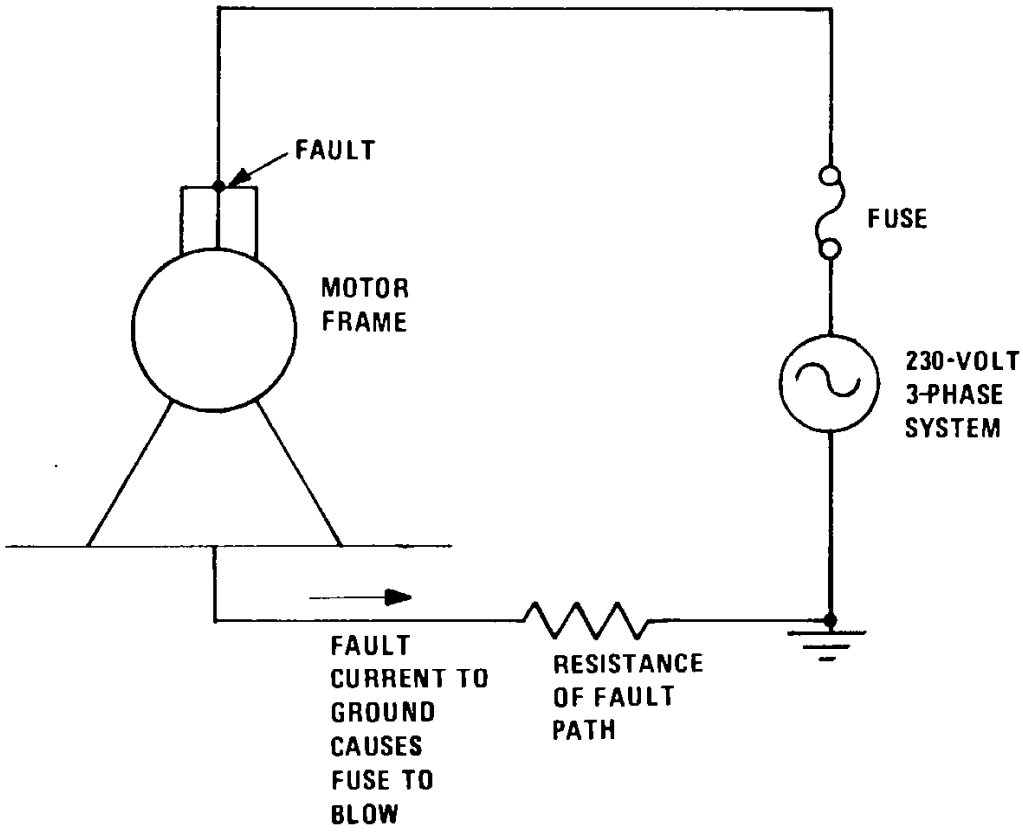

Figure 4-1. Grounding for Fault Protection

Fault clearance in power distribution systems is normally provided by circuit breakers, fuses, or overload relays in each phase. These devices provide personnel protection only if the fault current is sufficient to trip the over-current device. They generally however do not have response times which are adequate to protect the individual if he happens to be in direct contact with the energized object.

4.1.2 Ground-Fault-Circuit-Interrupter (GFCI). High resistance faults (low and moderate currents of 5 milliamperes or more) can be cleared rapidly with a device called a ground-fault-circuit-interrupter (GFCI). The GFCI contains an electronic circuit which continuously monitors the difference between the current supplied to the load and the current returned from the load. If this difference is not zero, some current must be leaking to ground. When this leakage current exceeds a preset value, the GFCI will act to interrupt the power to the circuit. GFCI's are so sensitive that they can be set to interrupt power fault currents as low as 2 milliamperes. Experiments with dogs have shown that trip currents of 5 milliamperes or less will prevent electrocution. (GFCI's have proven so effective as protection against electric shock that the National Electrical Code requires that all 15 and 20 ampere bathroom, garage, and outdoor receptacles in family dwelling units and in circuits set up at construction sites be protected with a GFCI. MIL-STD-188-124A also recommends they be installed on 120 volt single phase 15 and 20 ampere receptacles of C-E facilities.)

4.2 EARTH CONNECTION.

Historically, grounding requirements arose from the need to protect personnel, equipment, and facilities from lightning strokes and from industrially generated static electricity. Structures, as well as electrical equipment, were connected to earth, i.e., grounded, to provide the path necessary for lightning and static discharges. As utility power systems developed, grounding to earth was found to be necessary for safety. All major components of the system such as generating stations, substations, and distribution systems are earth grounded to provide a path back to the generator for the fault currents in case of transmission line trouble. The path to earth should have as low a resistance as possible. A low resistance minimizes the potential difference between equipments connected to the earth electrode subsystem when fault currents flow. Thus personnel who come in contact with two or more pieces of equipment at one time are protected.

Ideally, the earth connection should exhibit zero resistance between the earth and the equipment and facilities connected to it. Any physically realizable connection, however, will exhibit a finite resistance to earth. The economics of the design of the earth electrode subsystem involves a trade-off between the expense necessary to achieve a low resistance and the satisfaction of minimum subsystem requirements. The 10 ohm design objective of MIL-STD-188-124A is considered such a trade-off.

4.3 AC POWER LINE GROUND.

The grounding conductor (green wire) in a single-phase 115/230 volt ac power distribution system in a facility is one of four leads, the other three being the two phase or "hot" leads (black/red) and the neutral lead (white wire). The green wire is a safety conductor designed to carry current only in the event of a fault. The "hot" leads are connected from the first service disconnect to the high sides of the secondary of the distribution transformer and the neutral is connected to the center tap which is grounded to a ground terminal at the transformer. When a single transformer supplies power to only one communications building, for fault

protection the grounding conductor shall be grounded on the source side of the first service disconnect to the earth electrode subsystem and also to the ground terminal at the distribution transformer. For 3-phase wye systems a five-wire service entry cable consisting of one neutral, one grounding, and three phase conductors shall be employed. In either case, when a single transformer supplies power to a single building, the safety ground (green wire) shall be grounded to the earth electrode subsystem at the supply side of the first service disconnect of the facility as well as at the distribution transformer as shown in Figure 4-2. The neutral shall also be grounded at both locations.

When a single transformer supplies power to more than one C-E building and if noise or hum is encountered in C-E circuits or equipments, the neutral should be lifted or removed from ground at each service disconnect. In this case the neutrals from each building are grounded at the distribution transformer only (see Figure 4-3).

To protect personnel from exposure to hazardous voltages, all exposed metallic elements of electrical and electronic equipment are connected to ground with the green wire. Then, in the event of inadvertent contact between the hot lead and chassis, frame, or cabinet through human error, insulation failure, or component failure, a direct fault clearance path is established to quickly remove the hazard.

Grounding of a 3-phase wye power distribution system is accomplished similarly to the single phase system. The connections for a typical system are shown in Figure 4-3. As in single phase systems, the neutral lead is bonded to the green wire at the supply side of the first service disconnecting means and grounded to the earth electrode subsystem as well as to the ground terminal at the distribution transformer. If one transformer supplies power to more than one C-E building, the neutral is lifted from ground at the service disconnect.

A 3-phase system served by a transformer with a delta connected secondary will require the use of a grounding transformer to ground the system and establish a neutral. The grounding transformer may be either a “zig-zag” or “wye-delta” type, both of which have leads which are attached to each of three phases and a fourth lead which is grounded and serves as the neutral. The typical connections for a grounding transformer are shown in Figure 4-4.

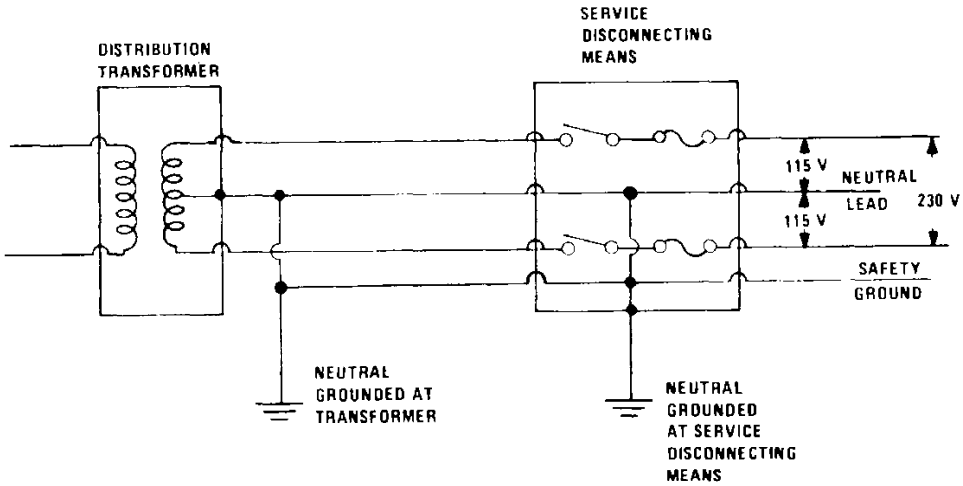

Figure 4-2. Single-Phase 115/230 Volt AC Power Ground Connections

4.4 TEST EQUIPMENT. Test equipments are available to measure the resistances and impedances of the fault protection subsystems including the grounding (green) conductor as well as the signal reference subsystem (equipotential plane) which may at times become part of the fault protection subsystem. These equipments can measure the impedances (at 60 Hz) of each path from the equipment having the fault to the first service disconnect means and therefore assist in determining the value of the fault current over each path. The information will in turn be beneficial in determining or predicting the degree of interference which may be anticipated should a fault current be superimposed on the signal reference subsystem. (4-1 and 4-2)

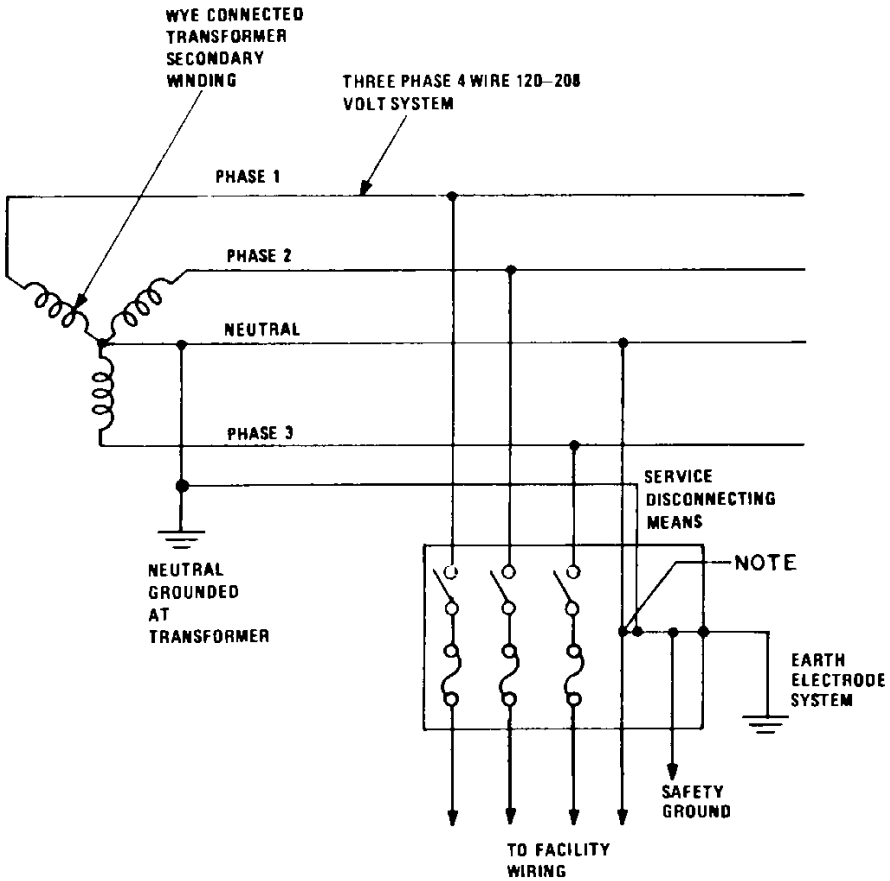

NOTE: Lift when single transformer supplies power to more than one building or because of objectionable current, noise or interference.

Figure 4-3. Three-Phase 120/208 Volt AC Power System Ground Connections

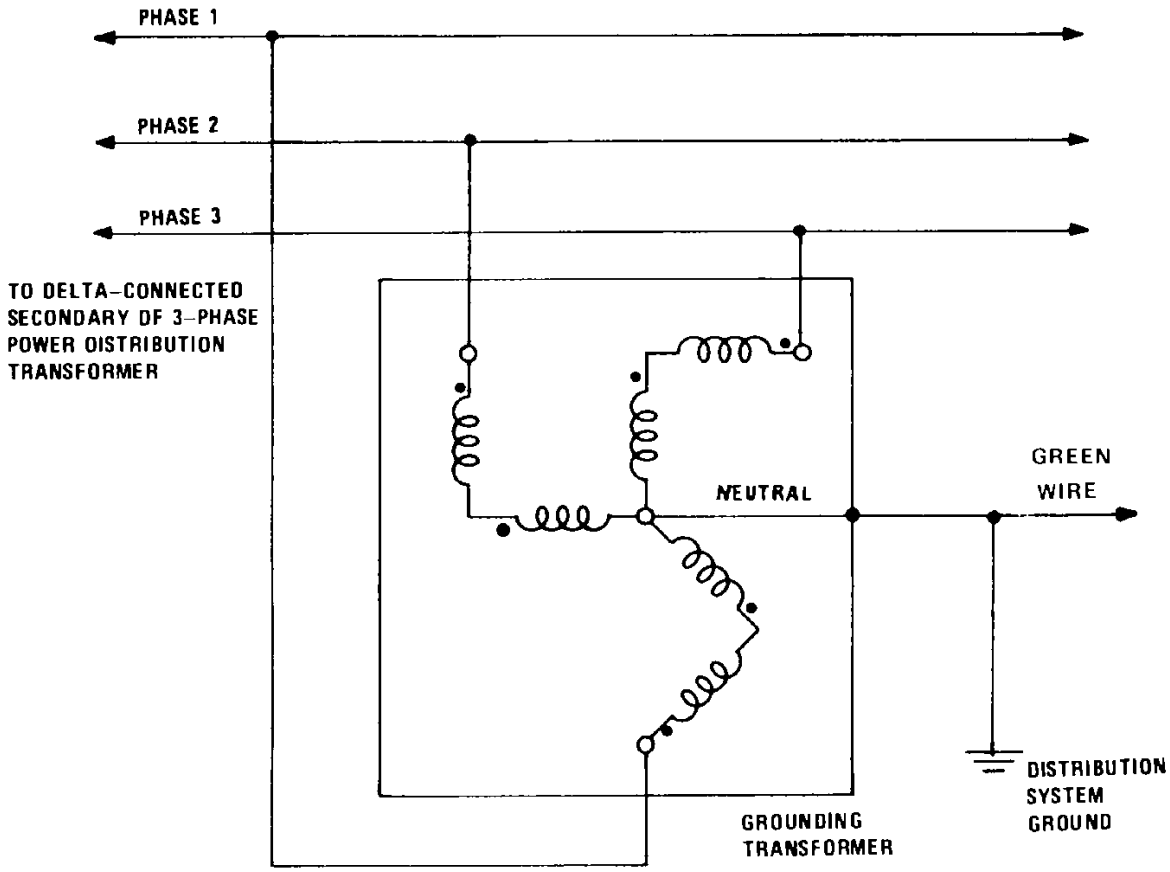

Figure 4-4. Connections for a Three-Phase "Zig-Zag" Grounding Transformer

4.5 REFERENCES.

4-1. A Practical Approach to Establish Effective Grounding for Personnel Protection, IEEE Conference Paper, Chris C. Kleronomos and Edward Cantwell, 1979.

4-2. Some Fundamentals of Equipment Grounding Circuit Design, R.H. Kaufmann, 1954.

CHAPTER 5

GROUNDING OF SIGNAL REFERENCE SUBSYSTEM

5.1 INTRODUCTION.

Signal circuits are grounded and referenced to ground to (1) establish signal return paths between a source and a load, (2) control static charge, or (3) provide fault protection. The desired goal is to accomplish each of these three grounding functions in a manner that minimizes interference and noise.

If a truly zero impedance ground reference plane or bus could be realized, it could be utilized as the return path for all currents -- power, control, audio and rf -- present within a system or complex. This ground reference would simultaneously provide the necessary fault protection, static discharge, and signal returns. The closest approximation to this ideal ground would be an extremely large sheet of a good conductor such as copper, aluminum, or silver underlying the entire facility with large risers extending up to individual equipments. The impedance of this network at the frequency of the signal being referenced is a function of conductor length, resistance, inductance, and capacitance. When designing a ground system in which rf must be considered, transmission line theory must be utilized.

5.2 CONDUCTOR CONSIDERATIONS.

5.2.1 Direct Current Resistance.

The resistance, R_{dc}, of a conductor of uniform cross section is proportional to the length and inversely proportional to the cross-sectional area, that is

$$R_{dc} = \rho \ell / A \text{ ohms}, \tag{5-1}$$

where ρ is the resistivity of the conductor material, ℓ is the length of the conductor in the direction of current flow, and A is the cross-sectional area of the conductor. Values of R_{dc} for the standard sizes of wire and cable are given in Table 5-1. (For data on wire sizes not shown in this table, consult References 5-1 and 5-2.)

At dc, the resistance of the conductor is the controlling factor. Except for very unusual situations (such as when the signal to be processed is very low in amplitude or where the interfacing equipments are very far apart physically), an adequate ground can generally be realized for dc in a relatively economical manner utilizing low resistivity materials such as copper and aluminum. Most systems, however, employ other than dc signals. Therefore, the frequency-dependent properties of the conductors become important.

5.2.2 Alternating Current Impedance. The ac impedance of a conductor is composed of two parts: the ac resistance and the reactance. Both the ac resistance and the reactance of a conductor vary with frequency as a result of skin effect.

Table 5-1

Properties of Annealed Copper Wire

AWG No.	Diameter mils	Diameter mm	Cross - Sectional Area cmil	Cross - Sectional Area mm^2	Resistance in Ohms per 1000 ft	Resistance in Ohms per km
4/0	460.0	11.7	211600	107.2	0.049	0.161
3/0	409.6	10.4	167800	85.0	0.062	0.203
2/0	364.8	9.3	133100	67.4	0.078	0.256
1/0	324.9	8.3	105500	53.4	0.098	0.322
1	289.3	7.3	83690	42.4	0.124	0.407
2	257.6	6.5	66370	33.6	0.156	0.512
4	204.3	5.2	41740	21.1	0.248	0.814
6	162.0	4.1	26250	13.3	0.395	1.296
8	128.5	3.3	16510	8.4	0.628	2.060
10	101.9	2.6	10380	5.3	0.999	3.278
12	80.8	2.1	6530	3.3	1.588	5.210
14	64.1	1.6	4 107	2.1	2.525	8.284
16	50.8	1.3	2583	1.3	4.016	13.176
18	40.3	1.0	1 624	0.8	6.385	20.948
20	31.9	0.8	1022	0.5	10.150	33.300

5.2.2.1 Skin Effect.

Whereas a direct current is uniformly distributed over the cross-sectional area of a conductor, alternating current tends to concentrate near the surface of the conductor. The higher the frequency, the greater the concentration near the surface. This physical phenomenon is called skin effect. A measure of the degree of penetration of the currents into the conductor is given by the skin depth, δ. δ is defined as the depth at which the current density is attenuated to $1/\varepsilon = 1/2.718 = 0.37$ of its value at the conductor surface. Skin depth may also be interpreted as the equivalent thickness of a hollow conductor carrying a uniform distribution over its cross-sectional area, having the same external shape as the actual conductor, and having a dc resistance exactly the same as the ac resistance of the conductor.

For conductors whose thickness is at least three times the skin depth, this depth is given by (5-3).

$$\delta = 5033\sqrt{\frac{\rho}{\mu_r f}} \text{ cm}, \qquad (5\text{-}2)$$

where ρ is the resistivity of the material in ohm-cm, f is the frequency in hertz, and μ_r is the relative permeability of the material. The skin depth for various metals is given in Table 5-2 and Figure 5-1. Note that copper has a skin depth of 0.34 inch (8.63 mm) at 60 Hz but only .00026 inch (0.066 mm) at 1 MHz.

Table 5-2

Parameters of Conductor Materials (5-4)

Material*	ρ (Ω-cm)	δ (cm)	R_s (Ω)
Silver	1.62×10^{-6}	$6.41/\sqrt{f}$	$2.52 \times 10^{-7}\sqrt{f}$
Copper	1.73×10^{-6}	$6.62/\sqrt{f}$	$2.61 \times 10^{-7}\sqrt{f}$
Aluminum	2.69×10^{-6}	$8.25/\sqrt{f}$	$3.26 \times 10^{-7}\sqrt{f}$
Brass	6.37×10^{-6}	$12.70/\sqrt{f}$	$5.01 \times 10^{-7}\sqrt{f}$
Solder	14.2×10^{-6}	$18.96/\sqrt{f}$	$7.48 \times 10^{-7}\sqrt{f}$

* $\mu_r = 1$

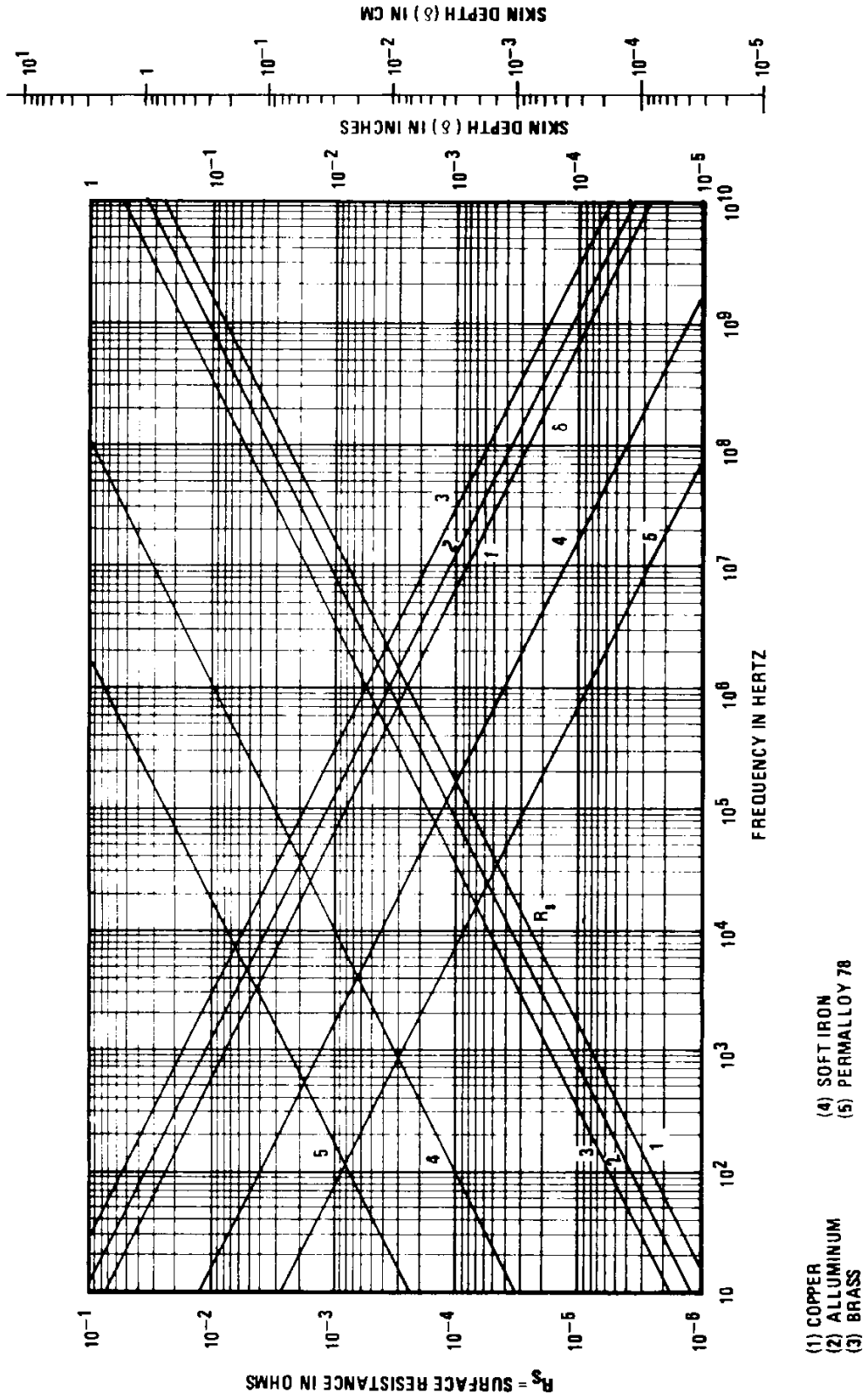

Figure 5-1. Surface Resistance and Skin Depth for Common Metals (5-5)

5.2.2.2 AC Resistance.

The ac resistance of a conductor of any shape can be determined from the skin depth if both the thickness and the radius of curvature of the conductor are much greater than the skin depth and if the radius of curvature does not vary too rapidly around the conductor's perimeter. For a conductor meeting these conditions, the ac resistance per unit length is

$$R_{ac} = \frac{\rho}{\delta P} \quad \text{ohms/meter, or} \tag{5-3}$$

$$= \frac{R_s}{P} \quad \text{ohms/meter} \tag{5-4}$$

where P is the circumference of the conductor and R_s is the surface resistance of the conductor. The surface resistance is defined as the ac resistance of a surface of equal length and width and is given by

$$R_s = \frac{\rho}{\delta} = 1.987 \times 10^{-4} \sqrt{\mu_r f \rho} \tag{5-5}$$

The surface resistance for various metals is also shown in Figure 5-1 and Table 5-2.

The ratio of the ac resistance to the dc resistance is called the resistance ratio of a conductor. Skin effect causes the resistance ratio to be greater than unity. The resistance ratio for straight cylindrical wires is given in Figure 5-2 in terms of a parameter X defined as

$$X = \sqrt{\frac{8\pi\mu_r f}{R_{dc} \times 10^9}} \tag{5-6}$$

where μ_r is the relative permeability of the conductor, f is the frequency in hertz, and R_{dc} is the dc resistance in ohms for 1 cm of conductor.* In the case of copper wire, Equation 5-6 becomes

$$X_{cu} = 2.71 \times 10^{-4} \, d_m \sqrt{f} \tag{5-7}$$

where d_m is the wire diameter in mils, or becomes

$$X_{cu} = 1.07 \times 10^{-2} \, d_m \sqrt{f} \tag{5-8}$$

where d_m is diameter in mm.

*It should be noted that Equation 5-6 applies at all frequencies, whereas Equations 5-3 and 5-4 apply only under the conditions stated.

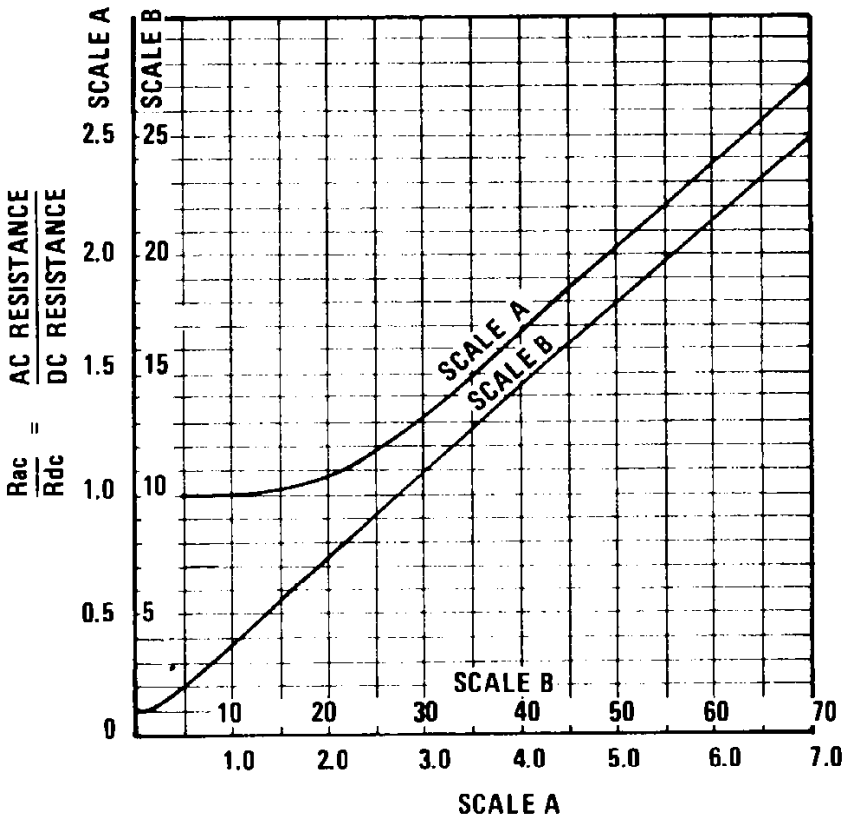

$$x = \sqrt{\frac{8\pi\mu_r f}{R_{dc} \cdot 10^9}}$$

Figure 5-2. Resistance Ratio of Isolated Round Wires (5-6)

5.2.2.3 Reactance

The reactance of the conductor is generally inductive and is given by the product of the radian frequency, ω, and the self-inductance, L, of the conductor. The self–inductance of a conductor is a measure of that property which causes an opposition to a change in the current flowing in the conductor. Because skin effect redistributes the current within a conductor with changes in frequency, the inductance of the conductor does vary with frequency.

The self-inductance of a straight round wire is given (5-6) by

$$L = 0.00508\ell \left(2.303 \log \frac{4\ell}{d} - 1 + \mu_r \kappa\right) \quad \mu H \tag{5-9}$$

where ℓ is the length in inches, d is the diameter in inches, and κ is a skin effect correction factor which may be determined (for copper) from Figure 5-3. For ℓ and d in centimeters, Equation 5-9 becomes

$$L = 0.002\ell \left(2.303 \log \frac{4\ell}{d} - 1 + \mu_r \kappa\right) \quad \mu H \tag{5-lo}$$

For materials other than copper, κ can be obtained from Figure 5-3 by using $f' = f(\rho_c/\rho)$ instead of the actual frequency f, where ρ is tile resistivity of the material and ρ_c is the resistivity of copper. For low frequencies where the current flow can be assumed to be uniform across the conductor cross-section, the inductance of a round straight wire of length ℓ, , diameter d, and relative permeability μ_r (if surrounded by air) is

$$L_{LF} = 0.00508\ell \left(2.303 \log \frac{4\ell}{d} - 1 + \frac{\mu_r}{4}\right) \quad \mu H \tag{5-11}$$

where all the dimensions are in inches. As the frequency increases, a limiting value of inductance, L_{HF}, is approached:

$$L_{HF} = 0.00508\ell \left(2.303 \log \frac{4\ell}{d} - 1\right) \quad \mu H \tag{5-12}$$

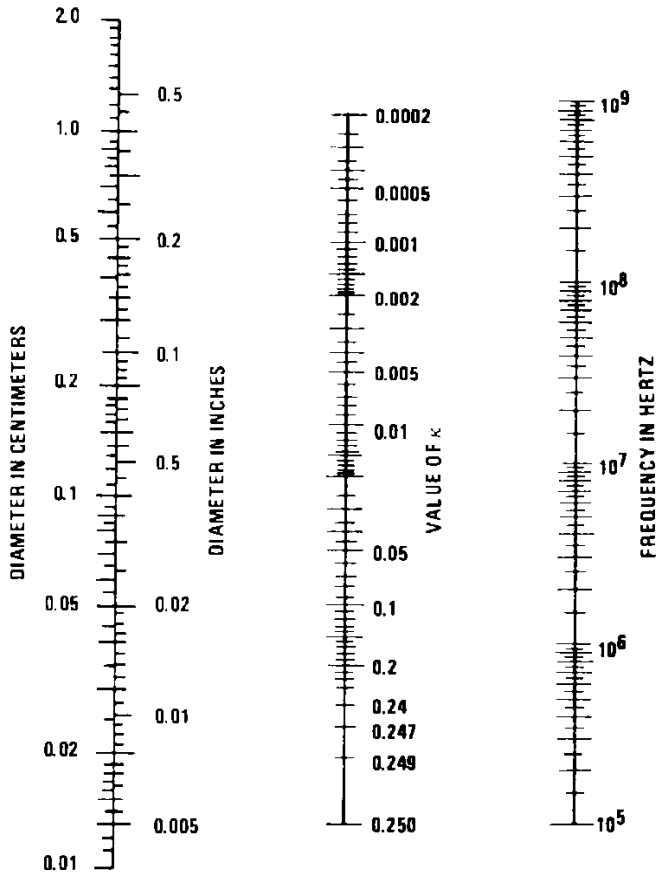

Figure 5-3. Nomograph for the Determination of Skin Effect Correction Factor (5-6)

In Equations 5-11 and 5-12, the constant 0.00508 becomes 0.002 when ℓ and d are in cm.

Figure 5-4 gives the value of L_{LF} for a 1/0 AWG solid round copper conductor as a function of length, and L_{HF} for various wire lengths and diameters is given in Figure 5-5.

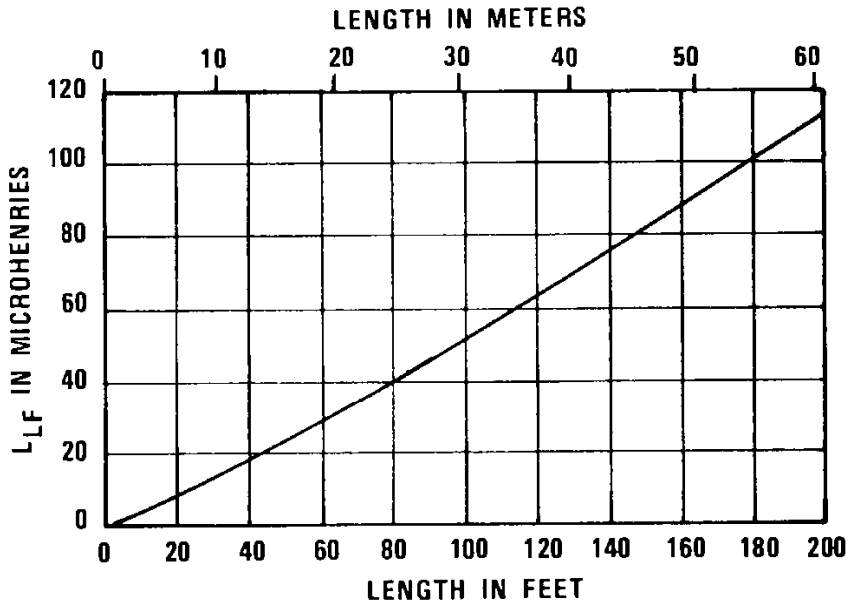

Figure 5-4. Low Frequency Self-Inductance versus Length for 1/0 AWG Straight Copper Wire (5-7)

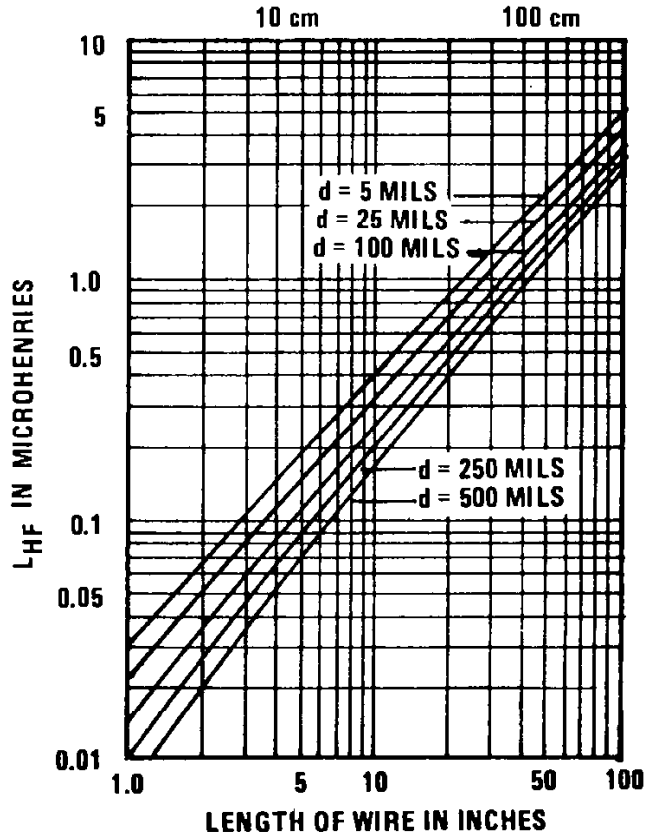

Figure 5-5. Self-Inductance of Straight Round Wire at High Frequencies (5-6)

5.2.2.4 Proximity Effect. When two or more conductors are in close proximity, the current flowing in one conductor is redistributed because of the magnetic field produced by the current in the other conductor. This effect is an extension of skin effect and is called proximity effect. The proximity effect tends to increase the ac resistance of a conductor to a value greater than that due to simple skin effect.

5.2.3 Resistance Properties vs Impedance Properties.

Although skin effect exists at all frequencies, it becomes more significant as the frequency increases. The reactance of a conductor also increases with frequency to further increase the conductor impedance above its dc value. To design an effective ground system one must consider the relative effects of the dc resistance, the ac resistance, and the inductance upon the total impedance of a ground conductor.

Using Equation 5-1, the dc resistance of round wire conductors can be calculated. The dc resistance per 1000 feet for four standard size copper cables is given in Table 5-3. Table 5-4 gives the dc resistance and (for 60 Hz) the ac resistance, the inductance and the total impedance of various size and length conductors as determined from Table 5-3 and from Equation 5-12. At a frequency of 1 MHz, these same characteristics for 30-meter (100-foot) lengths are given in Table 5-5 as calculated from Equations 5-3 and 5-12. Note that for the larger wires (No. 2 AWG or larger) the inductance of the long (> 100 feet) cables determines the magnitude of the impedance. Also note that for the same length cables there is not as much difference in the impedance magnitudes of a small and a large cable as there is in the resistance of the two cable sizes. For example, the ratio of the dc resistance of a 30-meter (100-foot) length of No. 12 AWG copper cable to the dc resistance of a 30 meter (100 feet) of 1/0 AWG copper cable is 0.15880/0.0098 = 16.20. Since the ac resistance at 60 Hz is approximately the same as the dc resistance, the ratio of the 60 Hz ac resistance of the two cables is also 16.20. At a frequency of 1 MHz the ratio of the ac resistance becomes 1.23/0.307 = 4.01. However, the 60 Hz impedance ratio is only 0.1605/0.0226 = 7.10 and the 1 MHz impedance ratio is only 382.65/329.49 = 1.16. These ratios are tabulated in Table 5-6 for comparison. From Tables 5-3 through 5-6 and the above example, the following conclusions are made:

a. Because of the inductance, the advantages offered by a large cable such as 1/0 AWG are less than they might appear to be from a comparison of the dc resistance values.

b. The advantage offered by a large cable, e.g., 1/0 AWG, will be somewhat more pronounced for relatively short conductor lengths than for long conductor runs. This is true because inductance increases more rapidly with length than does resistance (see Equations 5-1 and 5-9).

c. Because of the lack of dramatic improvement in ac impedance of large cables over smaller cable sizes for long runs, consideration of materials and labor costs are relatively important and may be the deciding factor.

d. Since even 1/0 AWG cables exhibit impedances from 22.6 mΩ to 115.8 mΩ for lengths of 30 meters (100 feet) and 137 meters (450 feet), respectively, the control of stray currents should be an essential objective in any signal grounding system.

Table 5-3

DC Parameters of Some Standard Cables

Size (AWG)	Diameter (mils)	DC Resistance (Ohms/1000 ft)
No. 12	80.81	1.588
No. 8	128.5	0.6282
No. 2	257.6	0.1563
1/0	324.9	0.09827

Table 5-4

Sixty-Hertz Characteristics of Standard Cables

Size (AWG)	Length (Ft)	R_{ac} (Ω)	L (μH)	X_L (Ω)	Z (Ω)
No. 12	30	0.04764	16.532	0.00623	0.0480
No. 12	100	0.15880	62.447	0.02354	0.1605
No. 8	30	0.01885	15.684	0.00591	0.0197
No. 2	30	0.00469	14.411	0.00543	0.0072
No. 2	100	0.01563	55.379	0.02088	0.0261
No. 2	150	0.02344	86.777	0.03271	0.0402
1/0	30	0.00294	13.987	0.00527	0.0060
1/0	100	0.00980	53.964	0.0226	0.0060
1/0	150	0.01470	84.654	0.03191	0.0351
1/0	300	0.02940	181.987	0.06861	0.0746
1/0	450	0.04410	284.105	0.10710	0.1158

Table 5-5

One-Megahertz Characteristics of Standard Cables

Size AWG	Length (Ft)	R_{dc} (Ω)	R_{AC} (Ω)	L (μH)	X_L (Ω)	Z (Ω)
No. 12	100	0.1588	1.23	60.9	382.65	382.65
No. 2	100	0.0156	0.387	53.8	338.03	338.03
1.0	100	0.0098	0.307	52.44	329.49	329.49

Table 5-6

Impedance Comparisons Between No. 12 AWG and 1/0 AWG

Frequency	Lenght	$\frac{R_{dc}\text{(No. 12 AWG)}}{R_{dc}\text{(1/0 AWG)}}$	$\frac{R_{ac}\text{(No. 12 AWG)}}{R_{ac}\text{(1/0 AWG)}}$	$\frac{Z\text{ (No. 12 AWG)}}{Z\text{ (1/0 AWG)}}$
60 Hz	30 ft.	16.20	16.20	9.23
60 Hz	100 ft.	16.20	16.20	7.99
1 MHz	100 ft.	16.20	4.01	1.16

5.2.4 Effects of Geometry. Many conductor shapes can be used in the signal ground network. As is the case for the solid round conductor, the impedance of other configured conductors is dependent upon the current distribution in the conductor and hence upon the signal frequency.

5.2.4.1 Stranded Cable.

A stranded cable consists of a number of wires in close proximity twisted about each other: it is more flexible than a solid conductor of the same cross-sectional area. Because of the close proximity of the wires, the skin effect within the cable redistributes most of the current to outer wires. These outer wires are in the form of a coil (due to the lay of the strand), thus increasing the self-inductance of the cable. Skin effect also increases the ac resistance as the frequency is increased.

For a given cable size, both the ac resistance and the self-inductance of a stranded conductor are greater than those of a solid round conductor. Because of their ineffectiveness at higher frequencies, it has been recoin mended that stranded cables not be used at frequencies over 1200 Hz (5-7). However, in many situations, large cables are required to safely carry currents produced by power faults and lightning discharges; in addition, solid wires larger than approximately 0.6 cm (0.25 in.) may be difficult to obtain.

5.2.4.2 Rectangular Conductors.

At frequencies high enough to make the skin effect noticeable, the resistance ratio of a flat rectangular conductor will be lower than that of a solid round wire with the same cross-sectional area if the width-to-thickness ratio exceeds approximately 2:1. The resistance ratios for several sizes of nonmagnetic ($\mu_r = 1$) rectangular conductors are plotted in Figure 5-6.

The self-inductance at lower frequencies of a rectangular conductor is (5-6)

$$L_{LF} = 0.00508\,\ell \left(2.303 \log \frac{2\ell}{b+c} + 0.5 + .2235\,\frac{b+c}{\ell}\right) \mu H, \tag{5-13}$$

where ℓ is the length, b is the width and c is the thickness, and all the dimensions are in inches. For the dimensions in cm, Equation 5-13 is

$$L_{LF} = 0.002\,\ell \left(2.303 \log \frac{2\ell}{b+c} + 0.5 + 0.2235\,\frac{b+c}{\ell}\right) \mu H. \tag{5-14}$$

If ℓ is Iarger than 50 (b+c), the last term in each equation may be neglected.

The sharp edges on rectangular conductors tend to radiate energy into space and a flat conductor may become an efficient antenna. To reduce the efficiency of the antenna and minimize this radiation, the edges of the rectangular conductor can be rounded to form an elliptical shape.

5.2.4.3 Tubular Conductors.

Tubular conductors provide the best compromise between factors such as availability, cost weight, cross-sectional area, skin effect, resistance ratio and inductance. By using the actual cross-sectional area of the conductive material, the dc resistance of tubular conductors can be determined from Equation 5-1; it is given for three different diameter copper tubes in Figure 5-7.

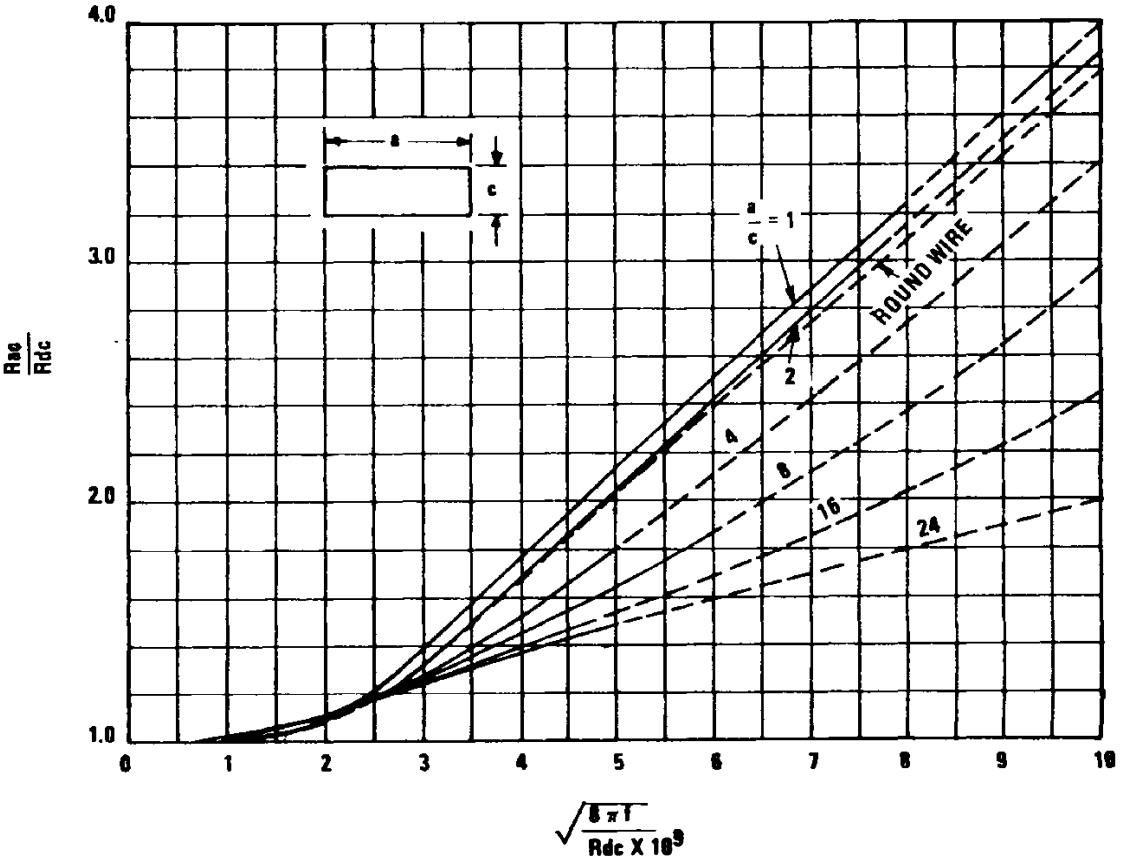

Figure 5-6. Resistance Ratio of Rectangular Conductors (5-3)

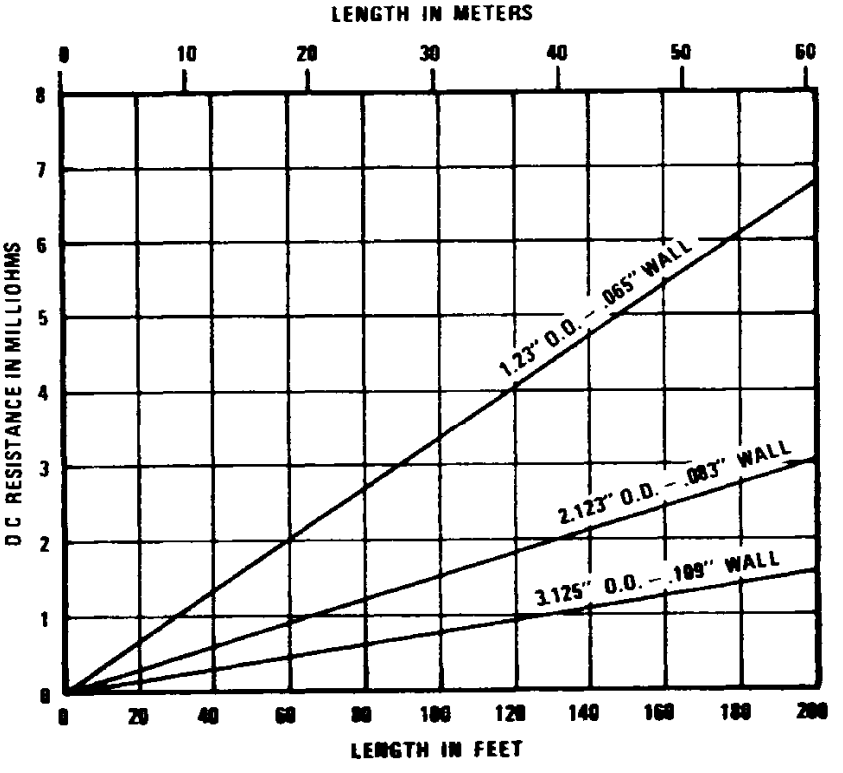

Figure 5-7. Resistance versus Length for Various Sizes of Copper Tubing (5-7)

Both the dc and the ac resistances of a tubular conductor are greater than those of a solid conductor with the same outside diameter. However, the ac resistance does not increase as much as the dc resistance, and, therefore, the resistance ratio of a tubular conductor is always less than that of a solid conductor. The ac resistance for four sizes of copper tubing is given in Figure 5-8, and the resistance ratio for isolated nonmagnetic tubular conductors of various sizes is given in Figure 5-9. For a given length of conductor, the ac resistance per unit weight (i. e., per given amount of copper) is less at high frequencies for tubular conductors than for any other shape.

The self-inductance of a conductor is reduced by the absence of a conductive medium in the center (5-7). Therefore, the self-inductance of a tubular conductor will be less than that of a solid conductor with the same diameter. The self-inductance of three representative sizes of copper tubes is given in Figure 5-10.

5.2.4.4 Structural Steel Members. The steel I-beam in the structural framework of a building is another conductor that is frequently used as a ground conductor. The resistivity of steel is approximately ten times that of copper; however, the skin depth of steel is greater than 3 times that of copper. This increased skin depth in steel increases the conducting area for high frequency currents. For example, in comparing a 0.3 meter (12-inch) I-beam with a 4/0 AWG copper cable, the perimeter of the I-beam is about 30 times as great and with a factor of 3 increase in the skin depth, the conducting area for high frequency currents in the steel I-beam is close to 90 times larger. This advantage is offset somewhat by the fact that the current tends to flow in the edges of the I-beam and by the surface roughness. The ac resistance will be increased by a factor of 4 because of this surface roughness and current distribution. Even so, the ac resistance of a 4/0 AWG copper cable is 4.25 times as great as that of a 0.3 meter (12-inch) I-beam. In addition, the building framework usually offers many paths in parallel, thus lowering both the ac resistance and the inductance between any two points (5-8).

5.3 SIGNAL REFERENCE SUBSYSTEM NETWORK CONFIGURATIONS. Within a piece of equipment the signal reference subsystem may be a sheet of metal which serves as a signal reference plane for some or all of the circuits in that equipment. Between equipments, where units are distributed throughout the facility, the signal ground network usually consists of a number of interconnected wires, bars or a grid which serves an equipotential plane. Whether serving a collection of circuits within an equipment or serving several equipments within a facility, the signal reference subsystem will be a floating ground, a single-point ground, or a multiple-point ground known as a multipoint or equipotential plane. Of the aforementioned signal reference subsystems, the equipotential plane is the optimum ground for communications-electronics facilities. For existing facilities where the presence of equipment prohibit the installation of an equipotential plane beneath, on, or in the floor, the plane may be installed overhead and the equipment connected to it. It is desirable, but not mandatory, to retrofit existing C-E facilities with equipotential planes.

5.3.1 Floating Ground.

A floating ground is illustrated in Figure 5-11. In a facility, this type of signal ground system is electrically isolated from the building ground and other conductive objects. Hence, noise currents present in the building's ground system will not be conductively coupled to the signal circuits. The floating ground system concept is also employed in equipment design to isolate the signal returns from the equipment cabinets and thus prevent noise currents in the cabinets from coupling directly to the signal circuits.

The effectiveness of floating ground systems depends on their true isolation from other nearby conductors, i.e., to be effective, floating ground systems must really float. In large facilities, it is often difficult to achieve a completely floating system, and even if complete isolation is achieved it is difficult to maintain such a system (5-9).

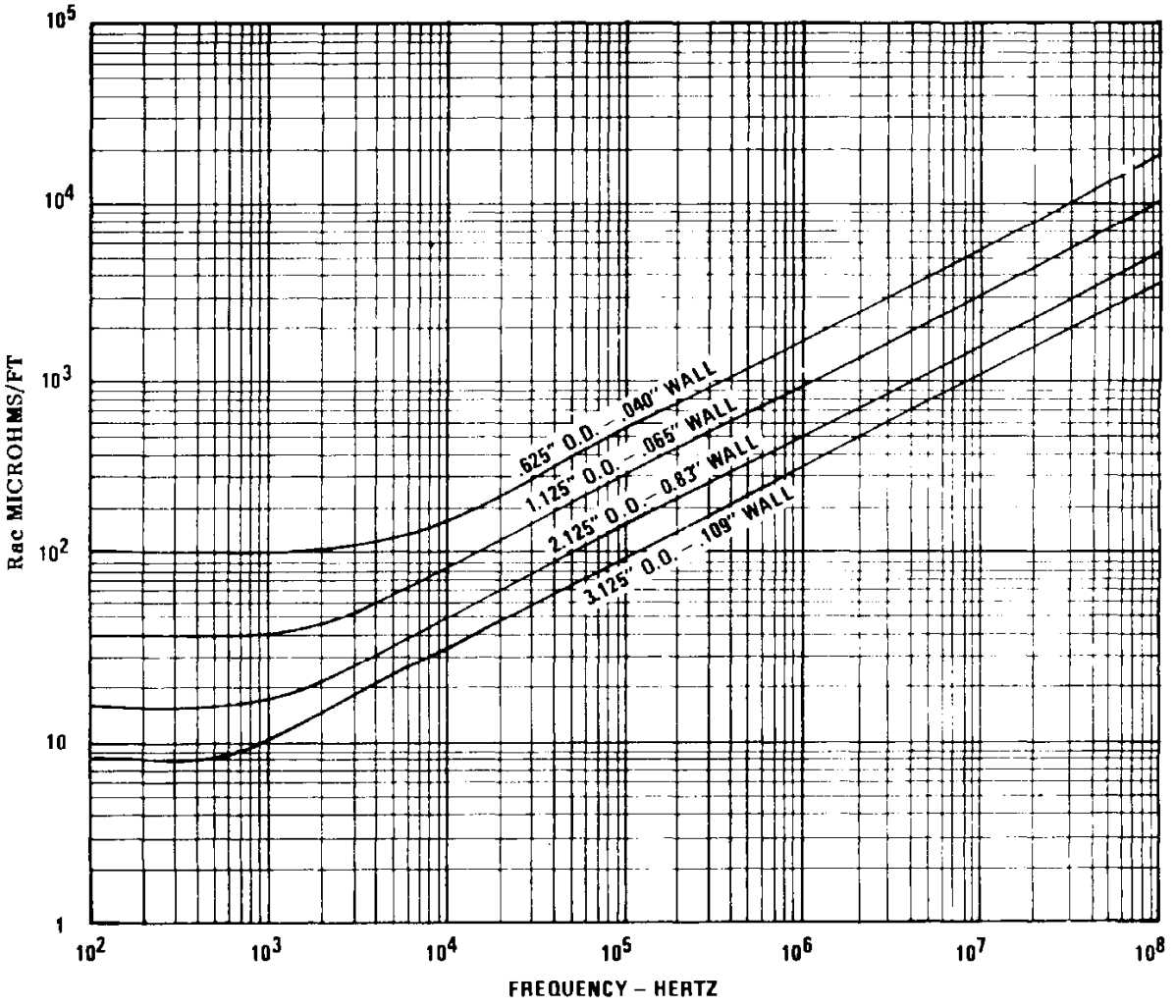

Figure 5-8. AC Resistance versus Frequency for Copper Tubing [5-7)

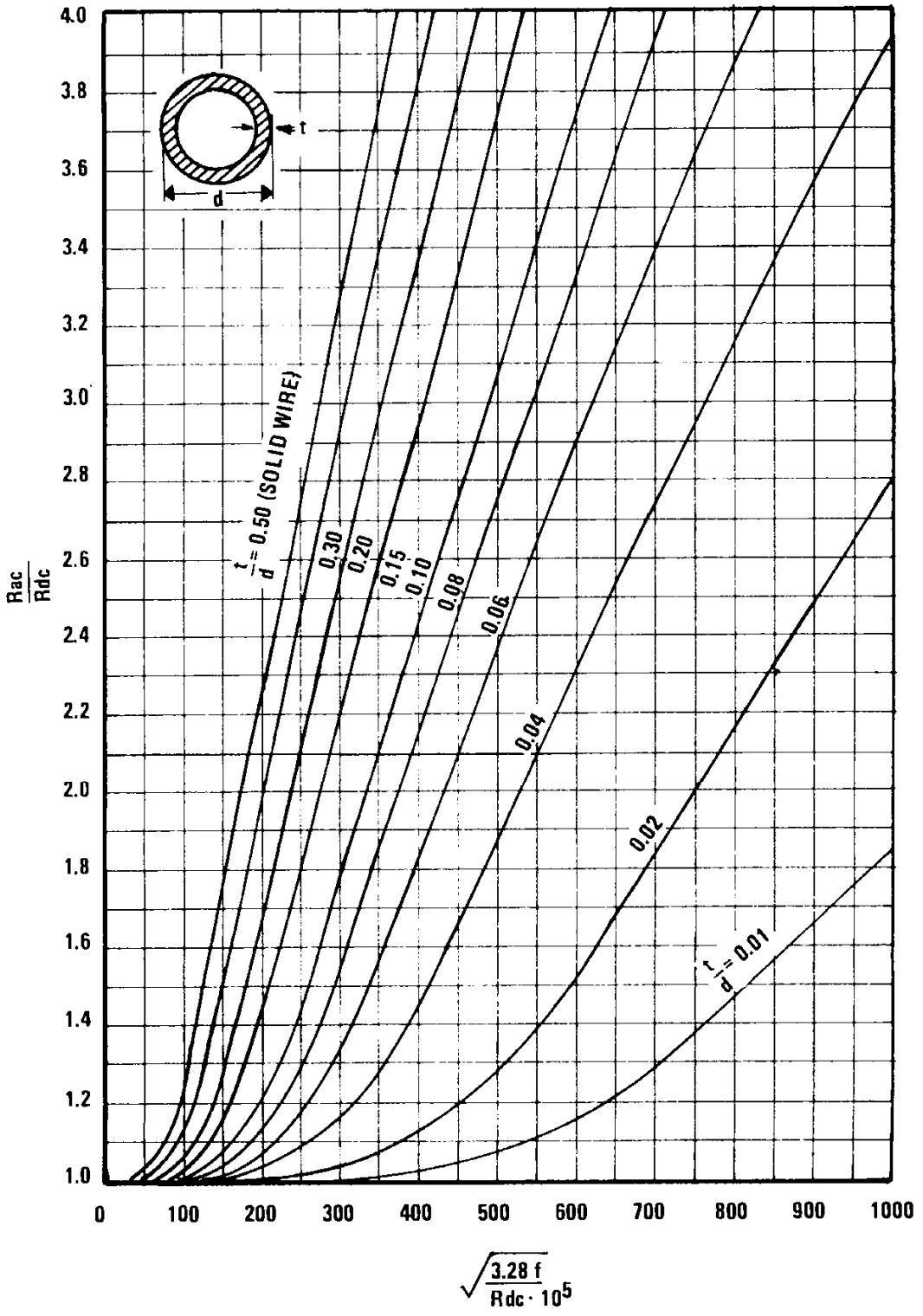

Figure 5-9. Resistance Ratio of Nonmagnetic Tubular Conductors (5-3)

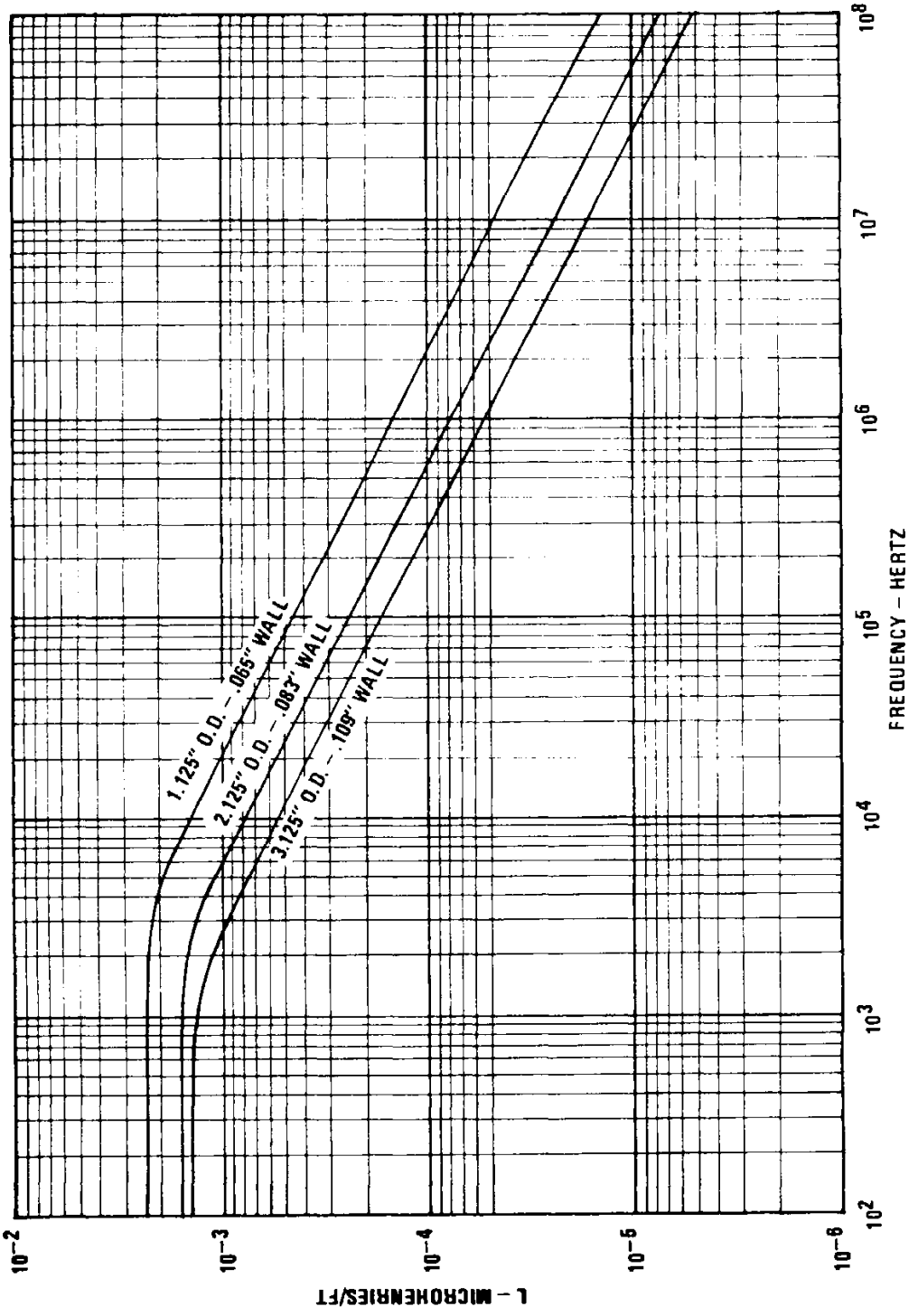

Figure 5-10. Inductance versus Frequency for Various Sizes of Copper Tubing (5-7)

In addition, a floating ground system suffers from other limitations. For example, static charge buildup on the isolated signal circuits is likely and may present a shock and a spark hazard. In particular, if the floated system is located near high voltage power lines, static buildup is very likely. Further, in most modern electronic facilities, all external sources of energy such as commercial power sources are referenced to earth grounds. Thus, a danger with the floating system is that power faults to the signal system would cause the entire system to rise to hazardous voltage levels relative to other conductive objects in the facility. Another danger is the threat of flashover between the structure or cabinet and the signal system in the event of a lightning stroke to the facility. Not being conductively coupled together, the structure could be elevated to a voltage high enough relative to the signal ground to cause insulation breakdown and arcing. This system generally is not recommended for C-E facilities.

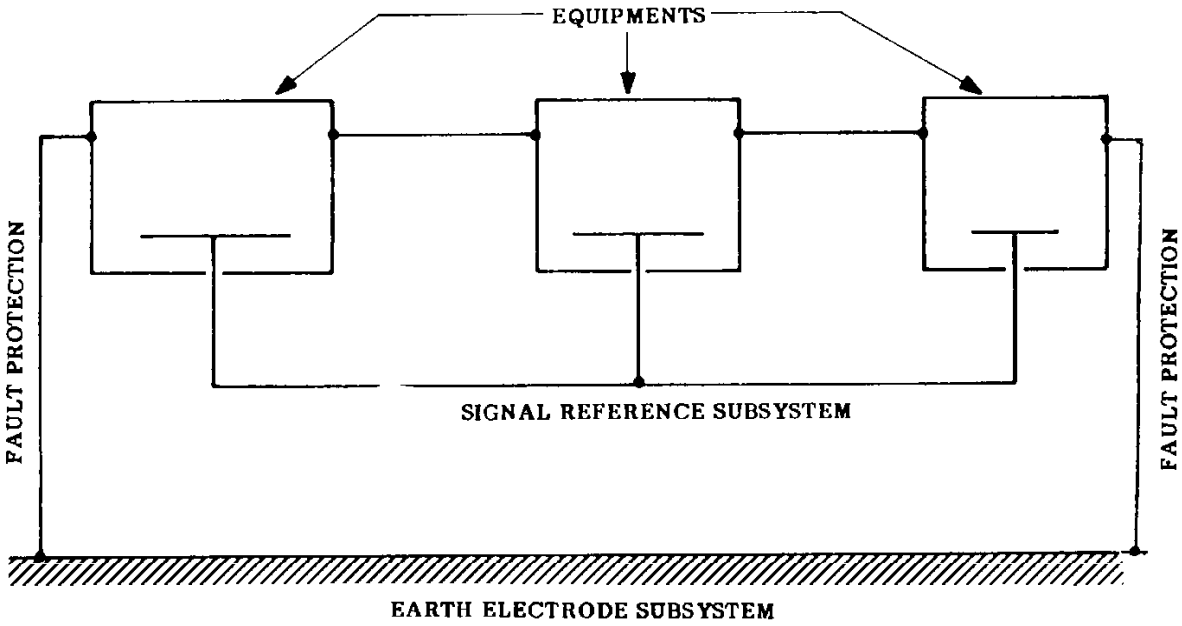

Figure 5-11. Floating Signal Ground

5.3.2 Single-Point Ground. (For lower frequencies, 0-30 kHz up to 300 kHz)*

A second configuration for the signal ground network is the single-point approach illustrated in Figure 5-12. With this configuration, the signal circuits are referenced to a single point, and this single point is then connected to the facility ground. The ideal single-point signal ground network is one in which separate ground conductors extend from one point on the facility ground to the return side of each of the numerous circuits

* Refer to 5.4.3 for definition of frequency limits.

located throughout a facility. This type of ground network requires an extremely large number of conductors and is not generally economically feasible. In lieu of the ideal, various degrees of approximation to single-point grounding are employed.

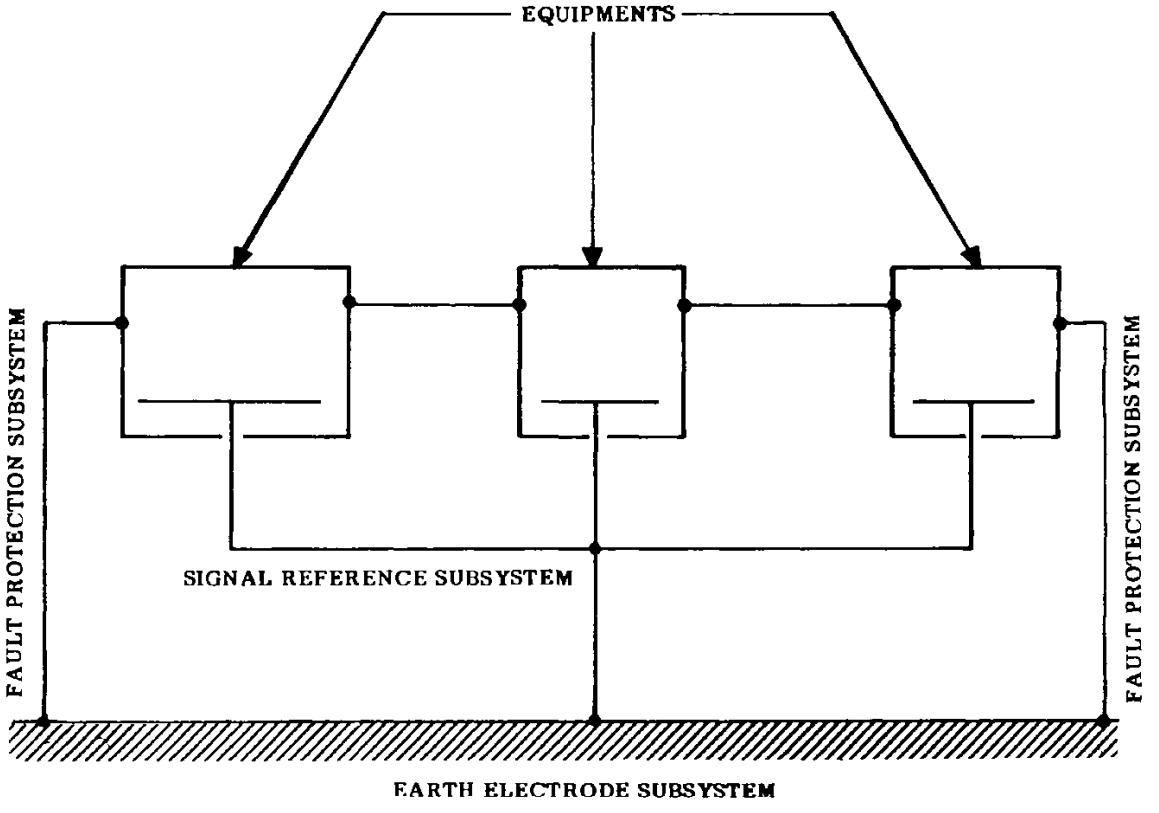

Figure 5-12. Single-Point Signal Ground (For Lower Frequencies)

The configuration illustrated by Figure 5-13 closely approximates an ideal single-point ground. It uses individual ground buses extending from an earth electrode subsystem to each separate electronic system. In each system, the various electronic subsystems are individually connected at only one point to this ground bus. Another frequently used approximation to the ideal is illustrated in Figure 5-14. Here the ground bus network assumes the form of a tree. Within each system, each subsystem is single-point grounded. Each of the system ground points is then connected to a tree ground bus with a single insulated conductor (usually yellow).

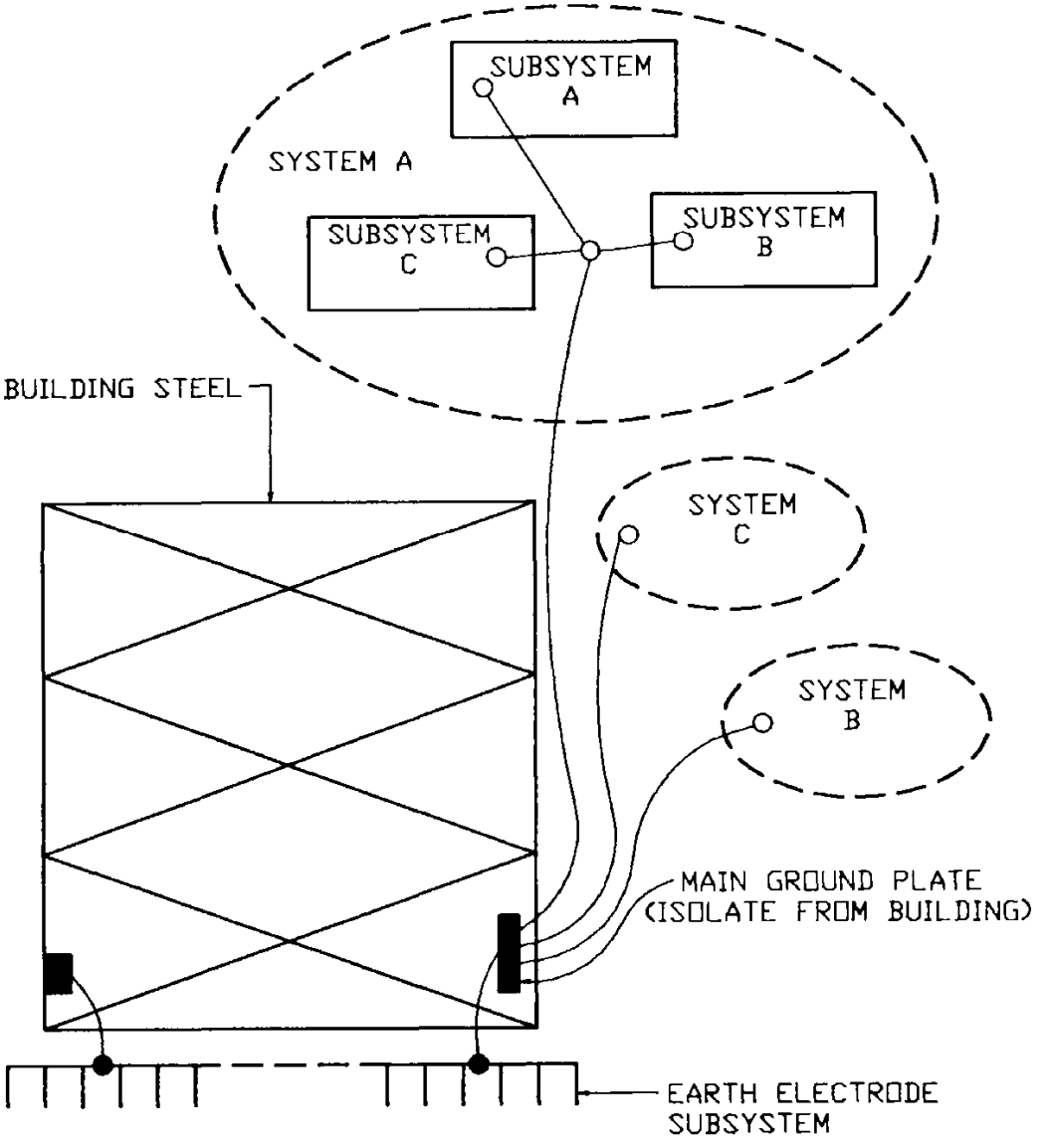

Figure 5-13. Single-Point Ground Bus System Using Separate Risers (Lower Frequency)

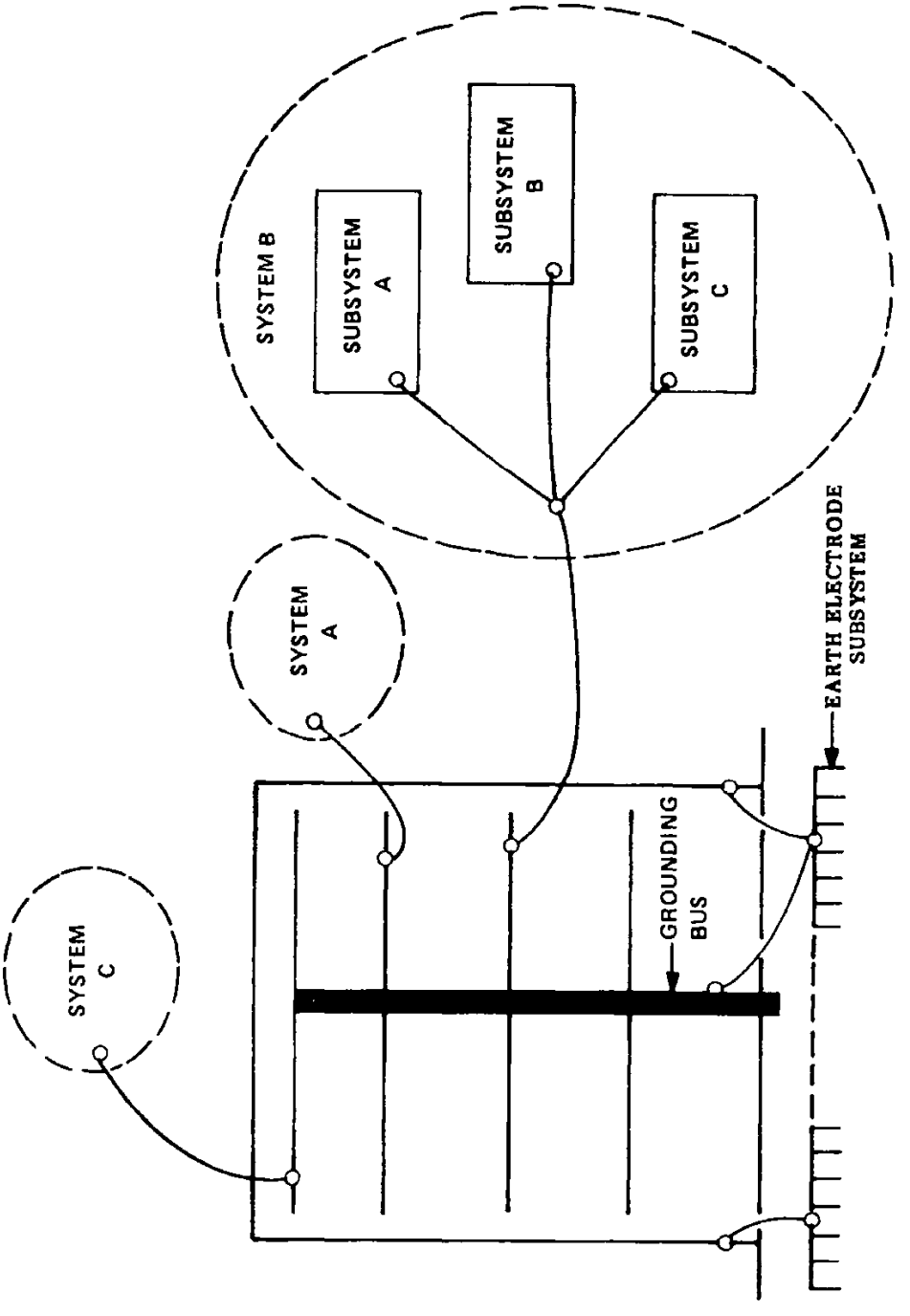

Figure 5-14. Single-Point Ground Bus System Using a Common Bus

The single-point ground accomplishes each of the three functions of signal circuit grounding mentioned at the beginning of this chapter. That is, a signal reference plane is established in each unit or piece of equipment and these individual reference planes are connected together and to the earth electrode subsystem. An important advantage of the single-point configuration is that it helps control conductively-coupled interference. As illustrated in Figure 5-15, closed paths for noise currents in the signal ground network are avoided, and the interference voltage, V_N, in the facility ground system is not conductively coupled into the signal circuits via the signal ground network. Therefore, the single-point signal ground network minimizes the effects of lower frequency noise currents which may be flowing in the facility ground.

Single-point grounds, however, also become transmission lines at higher frequencies with earth being the other side of the line. In addition, every piece of equipment bonded to this transmission line will act as a tuned stub. In the presence of digital signals (square waves) the tuned circuits will ring at the specific frequencies to which they are resonant. Since single-point grounds behave as transmission lines at rf frequencies, they will have different impedances as a function of frequency, i.e., they may appear as inductors, capacitors, tuned circuits, insulators or pure resistance, and therefore become extremely poor grounds. In a large installation, another major disadvantage of the single-point ground configuration is the requirement for long conductors. The long conductors (1/8 λ at the highest frequency of concern) prevent the realization of a satisfactory reference for

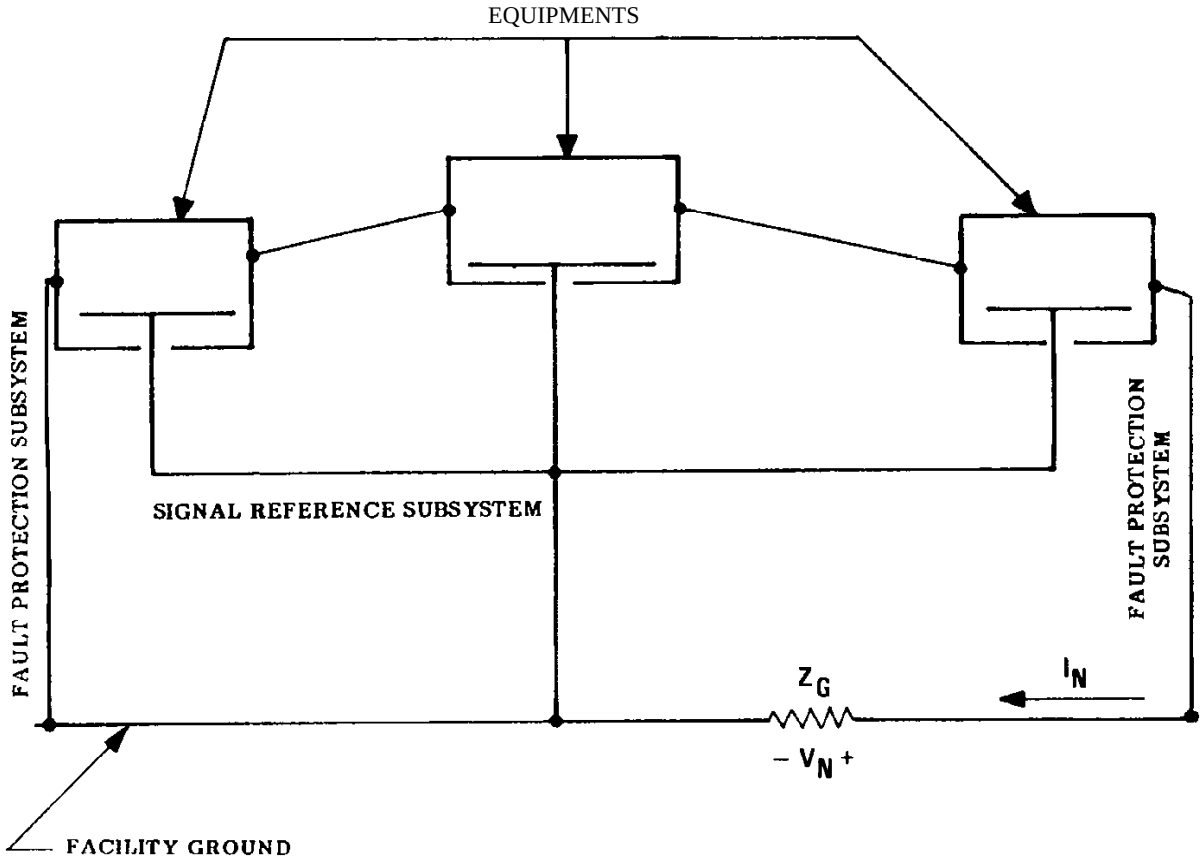

Figure 5-15. Use of Single-Point Ground Configuration to Minimize Effect of Facility Ground Currents

higher frequencies because of large self-impedances. Further, because of stray capacitance between conductors, single-point grounding essentially ceases to exist as the signal frequency is increased (5-10). Because of the aforementioned reasons, single-point grounds are not recommended for use in communications electronics facilities.

5.3.3 Multipoint Ground. (For higher frequencies, 30-300 kHz and above)

The multipoint ground illustrated in Figure 5-16 is the third configuration used for signal ground networks. The multipoint ground utilizes many conductive paths from the earth electrode subsystem to various electronic systems or subsystems within the facility. Within each subsystem, circuits and networks are multiply connected to this ground network. Thus, in a facility, numerous parallel paths exist between any two points in the ground network as shown in Figure 5-17.

Multipoint grounding frequently simplifies circuit construction inside complex equipments; it is the only realistic method for the grounding of higher frequency signal circuits. This method of grounding permits equipments employing coaxial cables to be more easily interfaced since the outer conductor of the coaxial cable does not have to be floated relative to the equipment cabinet or enclosure. The multipoint grounding has the disadvantage of exhibiting transmission line characteristics at rf frequencies. To be effective, a multipoint ground system requires an equipotential ground plane whenever the conductors exceed 1/8 λ at the highest frequency of concern (5-11).

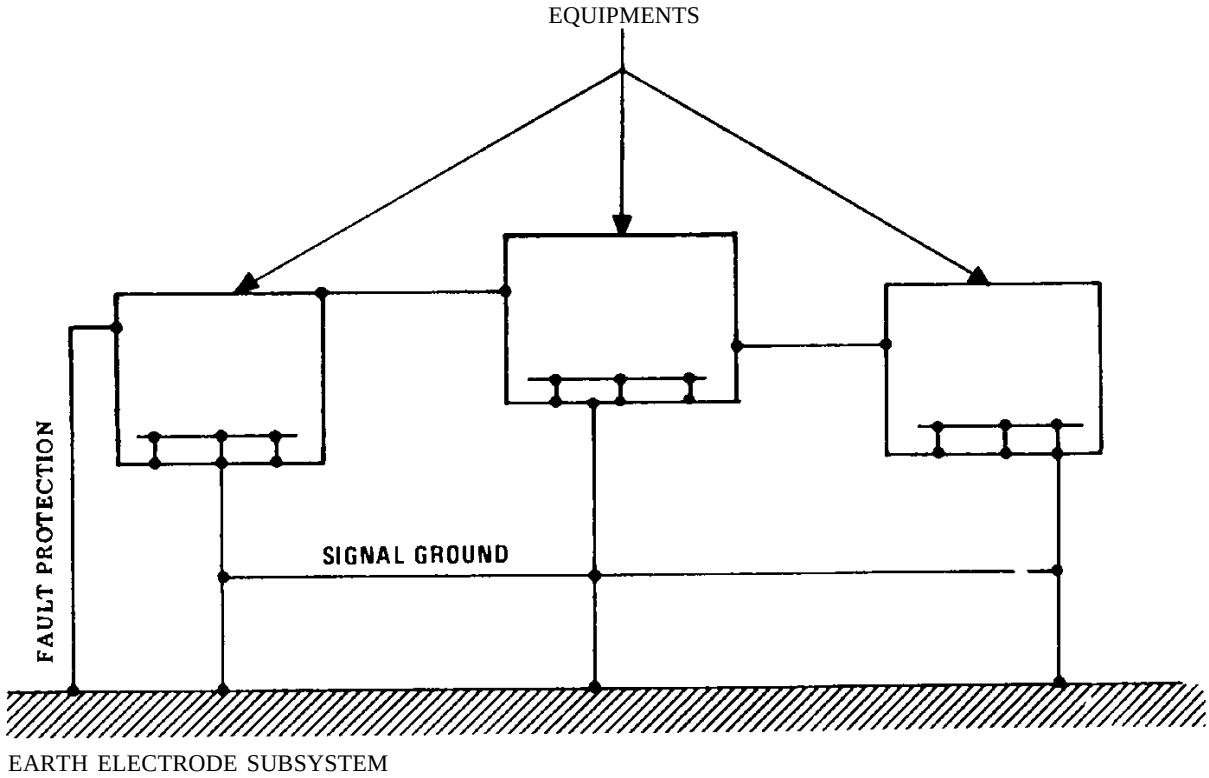

Figure 5-16. Multipoint Ground Configuration

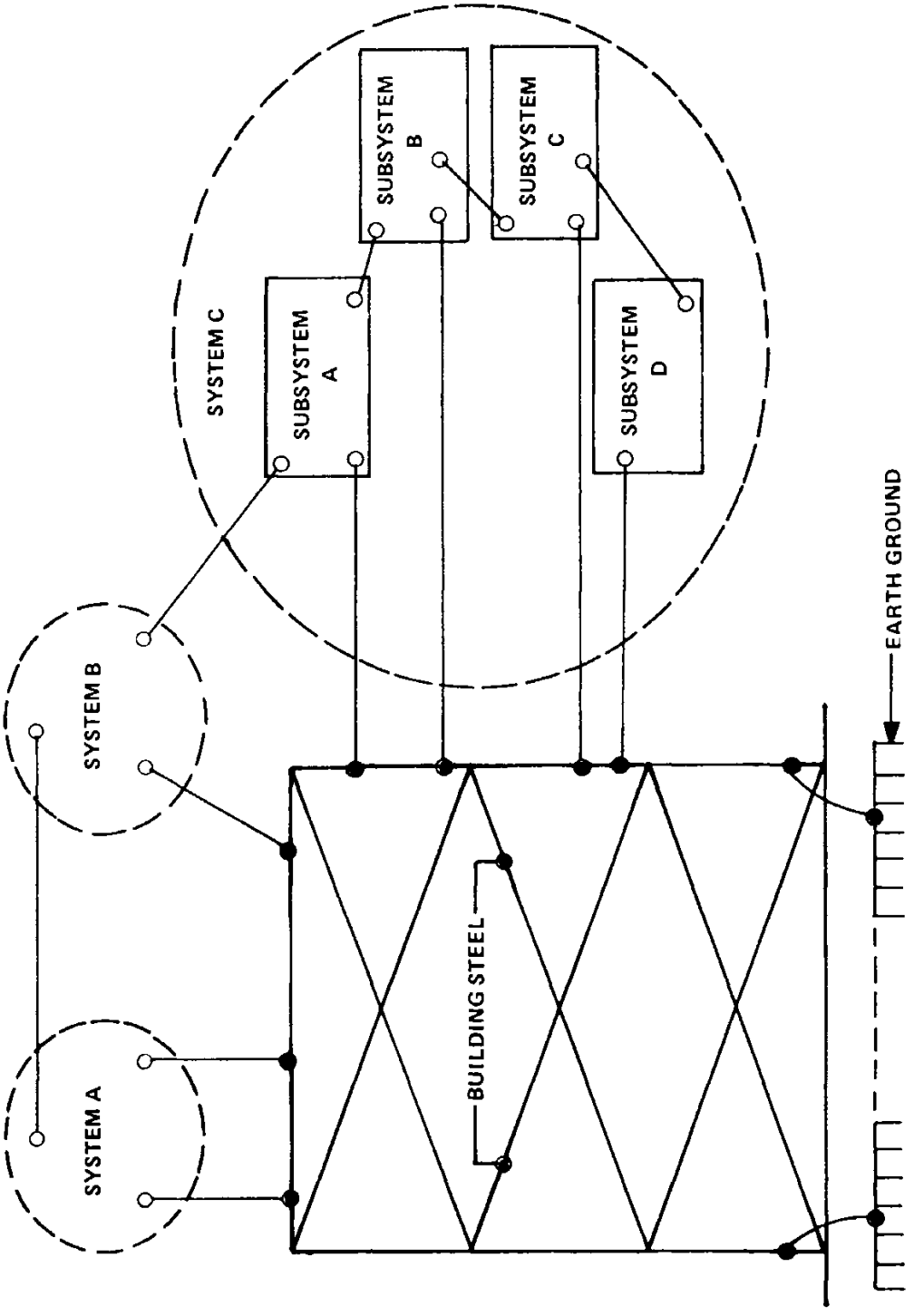

Figure 5-17. Use of Structural Steel in Multiple-Point Grounding

Care must also be taken to ensure sixty hertz power currents and other high amplitude lower frequency currents flowing through the facility ground system do not conductively couple into signal circuits and create intolerable interference in susceptible lower frequency circuits.

5.3.3.1 Equipotential Plane.

The importance of equipotential ground planes cannot be overemphasized for proper equipment operation, as well as for EMI and noise/static suppression. An equipotential ground plane implies a mass, or masses of conducting material which, when bonded together, offers a negligible impedance to current flow. Connections between conducting materials which offer a significant impedance to current flow, can place an equipotential plane at a high potential with respect to earth. High impedance interconnections between metallic members subject to large amounts of current due to power system faults can be extremely hazardous to personnel and equipment. The RFI effect of an equipotential plane or system must however be carefully considered, and it is important to understand that grounding may not, in and of itself, reduce all types of RFI. On the contrary, grounding a system may in some instances increase interference by providing conductive coupling paths or radiative or inductive loops.

Many of the deficiencies of the wire distribution system can be overcome by embedding a large conducting medium, in the floor under the equipments to be grounded. For existing facilities this system may be installed above the equipment to be grounded. A large conducting surface presents a much lower characteristic impedance than that of wire because the characteristic impedance (Z_o) is a function of L/C, hence as capacity to earth increases, Z_o decreases. The capacity of a metallic sheet or grid to earth is much higher than that of wire. If the size of the sheet is increased and allowed to encompass more area, the capacitance increases. Also, the unit length inductance decreases with width, which further decreases Z_o. If the dimensions of a metallic sheet increase extensively (as in the case of conducting floor), the characteristic impedance approaches a very low value. In this case, the characteristic impedance would be quite low throughout a large portion of the spectrum. This, in turn, would establish an equipotential reference plane for all equipments bonded to it.

Although it is not necessary from a functional point of view, terminating the surface to an earth connection presents the following advantages:

a. Personnel safety is not dependent on long cable runs for protection against power faults.

b. Low impedance is provided for power and radio frequencies.

Grounding buses in a communication facility where higher frequencies are present, act as lossy transmission lines and therefore must be treated as such. Due to this phenomena single-point grounds and multipoint grounds employing ground buses are high impedance grounds at higher frequencies. To be effective at the higher frequencies, the multipoint ground system requires the existence of an equipotential ground plane. Equipotential Planes are sometimes considered to exist in a building with a metal floor or ceiling grid electrically bonded together, or in a building with the ground grid embedded in a concrete floor connected to the structural steel and the facility ground system. Equipment cabinets are then connected to the equipotential plane. Chassis are connected to the equipment cabinets and all components, signal return leads,

etc., are connected to the chassis. The equipotential plane is then terminated to the earth electrode subsystem and to the main structural steel via multiple connections, to assure personnel safety and a low impedance path for all frequencies and signals. It is again emphasized, however, that care must be taken not to create loops which can couple signals from one system to another.

The equipotential plane also offers the following additional advantages;

a. Any "noisy" cable or conductor connected to the receptor, i.e., receivers, modems, etc., through or along such a ground plane will have its field contained between the conductor and the ground plane. The noise field can be "shorted out" by filters and bond straps because the distance between these "transmission line" conductors is very small. Shorting out the noise field has the desirable effect of keeping noise current from flowing over the receptor case and along any antenna input cables.

b. Filters at the interface terminals of equipment can operate more effectively when both terminals of their equivalent "transmission line" are available. As in a, above, a large conducting surface makes it possible to contain the field carried by the offending conductor, in such a way that it can be more easily prevented from traveling further.

c. A large conducting surface may also shield or isolate rooftop antennas from noisy cables below it.

5.3.3.2 Types of Equipotential Planes. Conducting materials that can be utilized for equipotential planes are (a) a copper grid embedded in the concrete floor such as a computer floor, (b) a subfloor of aluminum, copper, phospher bronze screen or sheet metal laid underneath the floor tile or carpet or (c) a ceiling grid above the equipment. Additional data and information on each of these planes can be found in para 1.5.1.1.1 of Vol II.

5.3.4 Floating System.

The floating ground system is completely insulated from the building or from any wiring that may be a source of circulating currents. The effectiveness of floating ground systems depends on their true isolation. In large systems, it is difficult to provide required isolation to maintain a good quality floating ground. Insulation breakdown occurs easily because static charges, fault potentials and lightning potentials may accumulate between the floating ground and other accessible grounds, such as external power line neutrals, water pipes, etc. Due to the personnel hazards from the difference of potential between the floating ground and building ground, this system is not recommended.

The preferred grounding method is to have an equipotential plane bonded to the earth electrode subsystem and building structure steel at multiple points with the structural steel also bonded to the earth electrode subsystem. In those facilities which do not have structural steel, multiple copper downleads should be connected from the equipotential plane to the earth electrode subsystem.

5.4 SITE APPLICATIONS.

Because of the interference threat that stray power currents present to audio, digital, and control circuits (or others whose operating band extends down to 60 Hz or below), steps must be taken to isolate these large currents from signal return paths. Obviously, one way of lessening the effects of large power currents is to configure the signal ground system so that the signal return path does not share a path common with a power return. This can be accomplished by making sure that the grounding conductor (green wire) of the power system is always run in the same cable, conduit, duct, or raceway with the phase and neutral conductors to the first service disconnect and then bonded to the earth electrode subsystem.

The first step in the development of an interference-free signal reference subsystem for an equipment or a facility is to assure that the ac primary power return lines are interconnected with the safety grounding network at only one point. Isolation of ac power returns from the signal reference subsystem is a major factor toward reducing many noise problems. Additional steps should also be taken to minimize other stray ac currents such as those resulting from power line filters. (one way of reducing these currents is to limit the number of filter capacitors in an installation by using common filtered ac lines wherever possible or by locating the filters as near as possible to the power service entry of the facility.)

To meet the safety requirements while minimizing the effects of power currents flowing with signal currents through a common impedance, a single connection* between the power distribution neutral and the earth electrode subsystem is necessary. This single connection eliminates conductive loops in which circulating (power) currents can flow to produce interference between elements of the signal reference network.

---

*This connection to the earth electrode subsystem should be made from the first service disconnect. Care should be taken to ensure that the signal reference, fault protection, and lightning protection subsystems are bonded to the earth electrode subsystem at separate ground rod locations.

5.4.1 Lower Frequency Network (0-30 kHz, and in some cases up to 300 kHz). The lower frequency grounding network for the facility should conform to the following principles:

a. It should be isolated from other ground networks including structural, safety, lightning and power grounds, etc. The purpose of this isolation is to prevent stray currents (primarily 50/60 Hz power) from developing voltage differentials between points on the ground network.

b. The inter-equipment or facility ground system should not be expected to provide the primary return path for signal currents from the load to the source. Figure 5-18 illustrates a way of discriminating against those extraneous signals which may inductively or capacitively induce currents into the grounding network and develop differential voltages between the source and the load. For example, Figure 5-19 illustrates a practice that is not recommended. If only one source and one load constitute the entire system or if the various source-load pairs within the system are essentially noninterfering in nature of their operation, this grounding arrangement may be acceptable.

c. The lower frequency grounding network must be connected to the earth electrode subsystem at only one point.

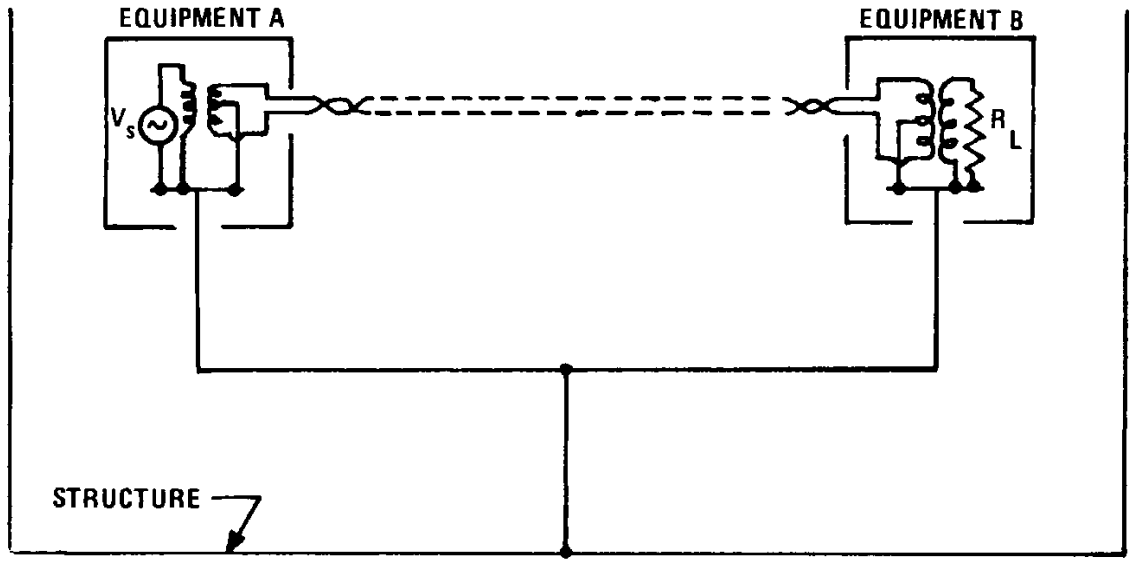

Figure 5-18. Recommended Signal Coupling Practice for Lower Frequency Equipment

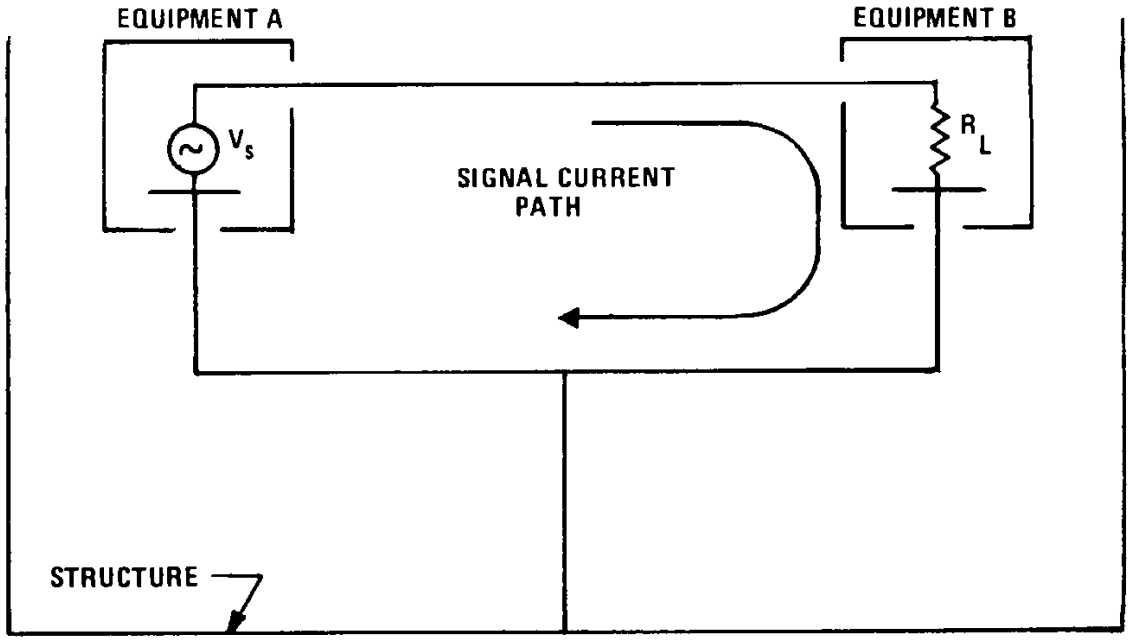

Figure 5-19. Ground Network Used as Signal Return
(Practice Not Generally Recommended)

d. The network must be configured to minimize conductor path lengths. In facilities where the equipments to be connected to the ground network are widely separated, more than one network should be installed.

e. Finally, the conductors of the network are to be routed in a manner that avoids long runs parallel to primary power conductors, lightning down conductors, or any other conductor likely to be carrying high amplitude currents.

5.4.2 Higher Frequency Network (> 300 kHz, and in some cases down to 30 kHz).

The higher frequency (equipotential) network provides an equal potential plane with the minimum impedance between the associated electronic components, racks, frames, etc. This plane shall be used at facilities or areas within facilities where interface frequencies are over 300 kHz and may be used at sites where interface frequencies are as low as 30 kHz. In higher frequency systems, equipment chassis are frequently used as the signal reference. The chassis in turn is usually connected to the equipment case at a large number of points to achieve a low impedance path at the frequencies of interest. See Para. 5.4.3.

The National Electrical Code requires that equipment cases and housings be grounded to protect personnel from hazardous voltages in the event of an electrical fault. Stray currents in the fault protection network can present an interference threat to any signal system whose operating range extends down into the lower frequency range and should be eliminated. Where such problems exist, it is advisable to attempt to reduce the impedance of the reference plane as much as possible. A practical approach is to interconnect equipment enclosures with the equipotential plane, via building structural steel, cable trays, conduit, heating ducts, piping, etc., into the earth electrode subsystem to form as many parallel paths as possible. It should be recognized that because of the inductance and capacitance of the network conductors, such multi point ground systems offer a low impedance only to the lower frequency noise currents; however, these currents can be the most troublesome in many facilities. Higher frequencies find a much lower impedance to ground through the distributed capacity of the equipotential plane.

5.4.3 Frequency Limits.

The question remaining concerns the frequency below which signals can be considered as lower frequency. Certainly the dividing line between the lower and higher frequency should be high enough to include all audio communications signals. Since digital systems employ frequencies which extend from dc up to several hundred MHz, a decision based on pulsed-signal considerations is more appropriate. To minimize the possibility that the ground bus conductors will form antennas, the lengths should not exceed 0.02 wavelength which is approximately 21 meters (70 feet) at 300 kHz. Since the grounding buses in medium to large sized facilities may extend 21 meters (70 feet), 300 kHz appears to be the maximum frequency for which a single-point grounding system should be used. At frequencies up to 30 kHz, conductor lengths up to 210 meters (700 feet) can be approached without exceeding the 0.02 wavelength criteria.

MIL-STD-188-124A establishes the lower frequency network range from dc to 30 kHz and in some cases (depending on the interface frequency) up to 300 kHz. The higher frequency network range extends above 300 kHz and may in some cases be used at sites where the interface frequencies are as low as 30 kHz. The frequency range from 30 kHz to 300 kHz is a mutual area and may be considered as either higher or lower depending upon the interface frequency.

5.5 REFERENCES.

5-1. Reference Data for Radio Engineers, Sixth Edition, Howard W. Sams and Co, Inc, New York, 1975.

5-2. D.G. Fink and J.M. Carroll, Standard Handbook for Electrical Engineers, Tenth Edition, McGraw-Hill Book Company, Inc, New York, 1968.

5-3. F.E. Terman, Electronic and Radio Engineering, McGraw-Hill Book Company, Inc, New York, 1955.

5-4. S. Ramo and J.R. Whinnery, Fields and Waves in Modern Radio, John Wiley and Sons, Inc, New York, 1943.

5-5. H.A. Wheeler, "Formulas for the Skin Effect," Proc. of IRE, September 1942, pp 412-424.

5-6. F.E. Terman, Radio Engineer's Handbook, McGraw-Hill Book Company, Inc, New York, 1943.

5-7. "Electromagnetic Compatibility Principles and Practices," NHB 5320.3, National Aeronautics and Space Administration, Washington DC, October 1965.

5-8. S.L. Crawford, et. al., "Final Report on the Development of Bonding and Grounding Criteria for John F. Kennedy Space Center, "WOL-TR-4201 (3 volumes), Contract NAS10-6879, Philco-Ford Corp, Palo Alto CA, 30 June 1970.

5-9. H.W. Denny, et. al., "Electronic Facility Bonding, Grounding, and Shielding Review," Report No. FAA-RO-73-51, Contract No. DOT-FA72WA-2850, Engineering Experiment Station, Georgia Institute of Technology, Atlanta GA, November 1972, AD 760639.

5-10.. F.E. Barline, D.H. O'Bryhim, and C.F. Thompson, "A Study of Factors that Affect the Signal-to-Noise Ratio at U.S. Naval Shore Receiving Facilities," Contract No. BSR 71118, 13 Bureau of Ships, Department of the Navy by Cooke Engineering Company, Alexandria VA.

5-11. P.V. Roberts, "Proposed Grounding and Bonding Criteria for Naval Shore Based Facilities," Naval Electronics Systems Test and Evaluation Facility, St. Inigoes MD, Project No. 68-78, 20 January 1970.

CHAPTER 6

INTERFERENCE COUPLING AND REDUCTION

6.1 INTRODUCTION.

A large number of diverse equipments are usually present in an electronics complex. The various systems and subsystems making up the complex may be concentrated in a small area such as a single room or they may be distributed over a wide geographical area and be located in several buildings. Whether the distances between individual equipments are large or small, the entire system must function as an integral unit. Each equipment must supply its designated output -- whether it be audio or rf, or analog or digital -- to some terminal point such as an antenna, land line, or another piece of equipment. Both primary and backup power must be supplied. Critical points in the system must be monitored both locally and remotely. To perform all the required tasks and functions, many control, power distribution, and signal transmission networks are necessary.

Within the interconnected complex, many potentially incompatible signals are present. For example, at one extreme are the large power sources (primarily dc and 60 Hz) supplying the various subsystems. At the other extreme, low level dc and very low frequency signals from monitors, indicators and other specialized devices are present. Also in the low frequency range are audio signals used for communications and control functions. in the higher frequency region of the spectrum are the rf signals ranging from hf to microwaves used for communications, surveillance and tracking, and other functions. These signals range in amplitude from the microwatt levels typical at communications receiver inputs to the kilowatt and megawatt levels transmitted by some radar systems. Ranging from audio frequencies into the rf region are the broadband display and communications systems, both analog and digital, which may span from a few hertz to several megahertz in frequency and may range in amplitude from a few millivolts to a few volts. Falling in overlapping frequency ranges, these various signals present within the complex may interact in an undesirable manner to cause Interference (generally manifested as annoying “noise”).

Interference is any extraneous electrical or electromagnetic disturbance that tends to interfere with the reception of desired signals or that produces undesirable responses in electronic systems. Interference can be produced by both natural and man-made sources either external or internal to the electronic system. The major objective of interference reduction in modern electronic equipments and facilities is to minimize and, if possible, prevent degradation in the performance of the various electronic systems by the interactions of undesired signals, both internal and external.

The correct operation of complex electronic equipments and facilities is inherently dependent on the frequencies and amplitudes of both the signals utilized in the system and the interference signals present in the facility. If the frequency of an undesired signal is within the operating frequency range of the system, errors in the system response may be obtained. The extent of the system response is a function of the amplitude of the undesired signal relative to that of the desired signal. For example, in systems operating with high level signals, undesired signals with amplitudes on the order of volts may be tolerable, while in low level systems a few microvolt may produce intolerable errors in the response of the system. An important element in the control of unwanted interactions between signals is the proper grounding of the system.

An ideal signal system is a simple signal generator-load pair as shown in Figure 6-1. With no extraneous voltages present within the loop, this simple pair is free of interference. Consider, however, what happens when the current return path is non-ideal and sources of noise are present as shown in Figure 6-2. Unless noise voltages V_{N1} and V_{N2} are identical, a voltage difference will exist between the low side of the generator (Node 1) and the low side of the load (Node 2). As shown in Figure 6-3, this voltage difference effectively appears in the signal transfer loop in series with the signal generator and produces noise currents in the load. Four ways of combating this noise problem are as follows:

a. Isolate the source-load pair from the noise sources; i.e., float the system and provide the necessary shielding and filtering to prevent coupling by other means.

b. Connect the low side of the loop to the reference plane at either Node 1 or Node 2 but not at both.

c. Reduce the impedance, Z_{return}, of the path connecting the two noise sources.

d. Reduce the magnitudes of V_{N1} and V_{N2} through the control of the currents producing them by lowering the impedance through which these currents flow.

Practical electronics circuits typically are a collection of several source-load combinations such as shown in Figure 6-4. These various source-load combinations may be functionally dependent on each other. Hence each individual source-load pair can not operate in isolation; there must be coupling between pairs. For example, one source may be driving several loads; one load may be receiving signals from several sources; or the load for one signal source may serve as the source for another load. At the circuit level, numerous sources and loads are connected in an interrelated fashion and the use of individual return paths for each source-load pair becomes impractical. It is more realistic to establish a common ground or reference plane which serves as the return path for several signals. The control of undesired network responses, particularly in high gain and/or higher frequency circuits, often requires the establishment of a common signal reference to which functional grouping of components, circuits, and networks can be connected. Ideally, this common reference connection offers zero impedance paths to all signals for which it serves as a reference. The several signal currents within the network can then return to their sources without creating unwanted conductive coupling between circuits.

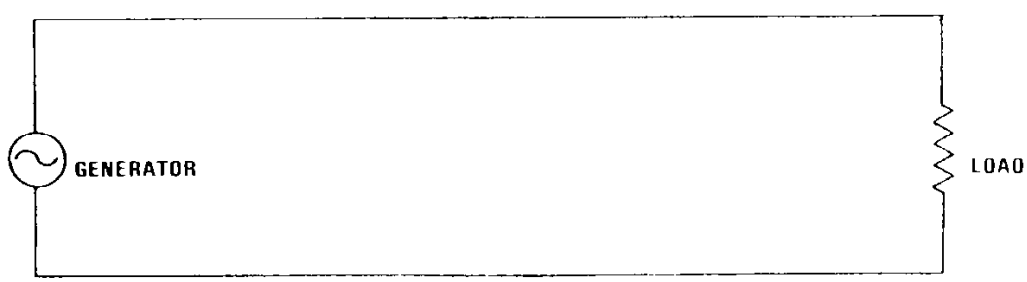

Figure 6-1. Idealized Energy Transfer Loop

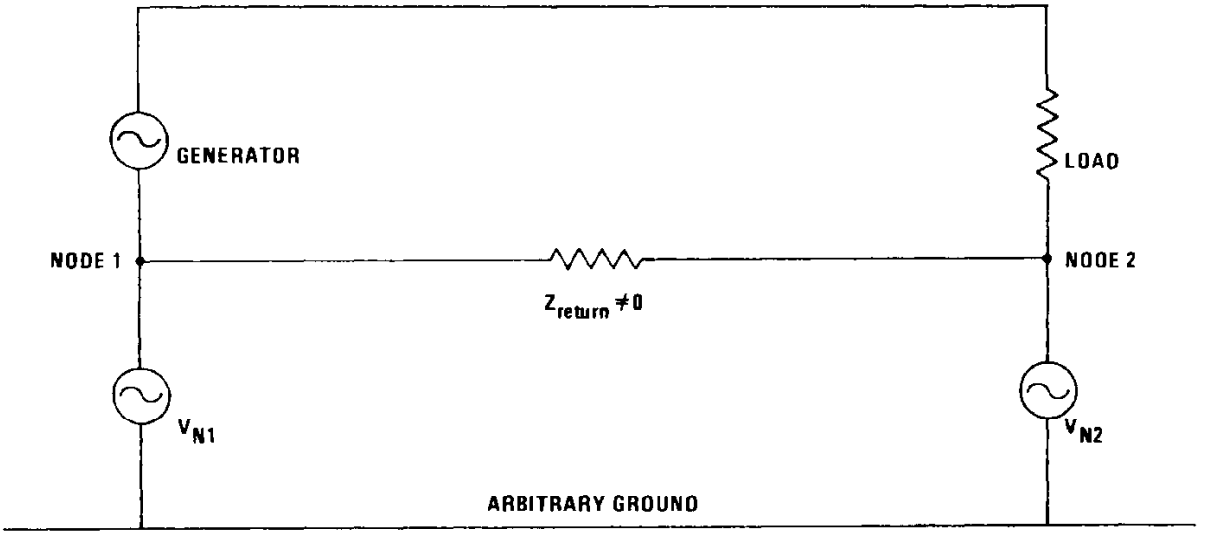

Figure 6-2. Energy Transfer Loop With Noise Sources in Ground System

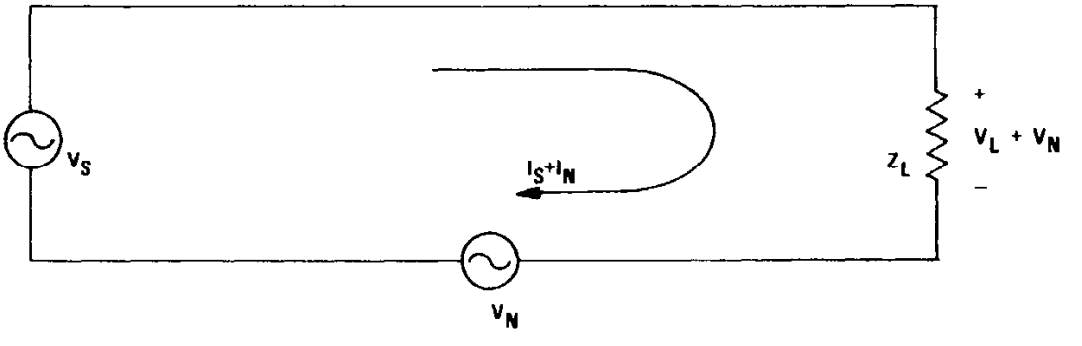

Figure 6-3. Equivalent Circuit of Non-Ideal Energy Transfer Loop

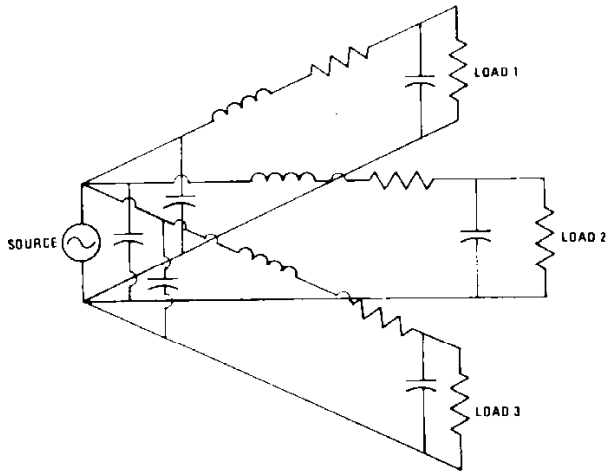

(a) ONE SOURCE DRIVING MULTIPLE LOADS

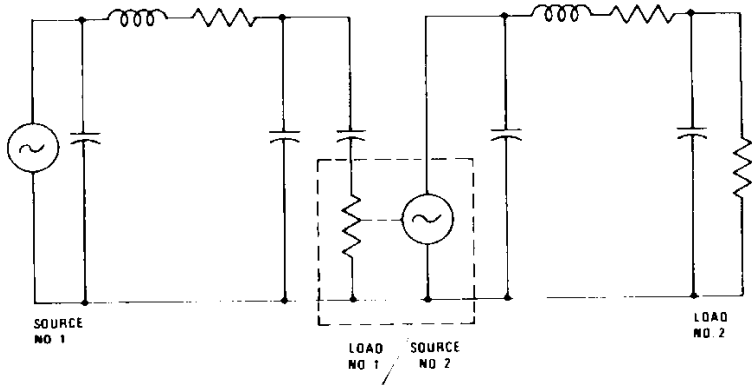

(b) CASCADED PAIRS

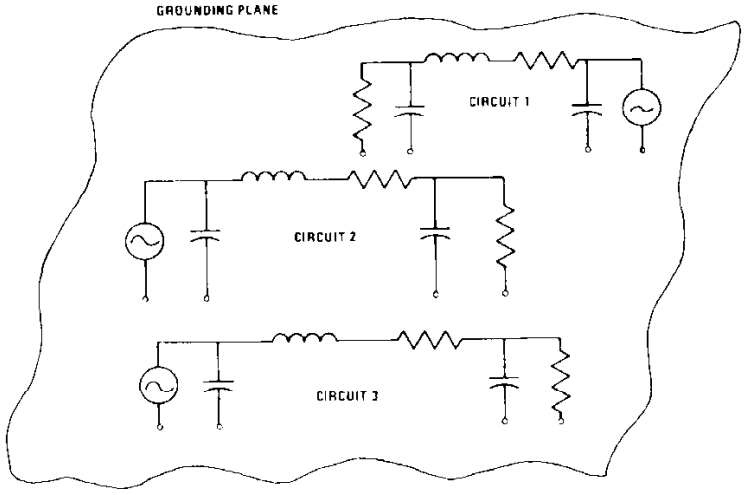

(c) SEPARATE PAIRS CONNECTED
TO COMMON GROUND PLANE

Figure 6-4. Practical Combinations of Source-Load Pairs

At the equipment level, the individual signal reference planes for the various networks must be connected together to prevent personnel shock hazards (see Chapters 5 and 9) and to provide as near as possible, the same signal reference for all networks. Thus, the signal reference plane may extend over large distances within a facility. The assumption that this large reference plane provides zero impedance paths is not valid; the series inductance and resistance of the conductors forming the signal reference plane and the shunt capacitance to nearby conductive objects must be considered. Currents flowing in the signal reference plane will develop voltages across this impedance and will produce electric and magnetic fields around the conductors.

6.2 COUPLING MECHANISMS.

Coupling is defined as the means by which a magnetic or electric field produced by one circuit induces a voltage or current in another circuit. Interference coupling is the stray or unintentional coupling between circuits which produces an error in the response of one of the circuits. The possible sources of spurious signals and the mechanisms by which this interference is coupled into a susceptible circuit must be understood in order to guard against interference pickup by sensitive signal circuits.

The techniques for reducing pickup depend on the type of interference present. Interference is broadly classified by its coupling means; i.e., as either being conductive or free-space. Conductive coupling occurs when the interfering and the interfered-with circuits are physically connected with a conductor and share a common impedance. Free-space coupling occurs when a circuit or source generates an electromagnetic field that is either radiated and then received by a susceptible circuit or that is inductively or capacitively coupled (near-field) to a susceptible circuit.

6.2.1 Conductive Coupling.

Power lines entering a facility provide good conductive coupling paths from interference sources external to the facility. This interference can easily be conducted into a particular unit or piece of equipment via the power lines entering the equipment. Also, interference can conductively couple between various circuits inside the equipment on the common dc power lines. If one dc power supply is utilized with several circuits operating over various signal voltage and frequency ranges, the operation of one circuit may adversely affect the operation of other circuits. For example, if both the preamplifier and the power amplifier sections of an audio amplifier are supplied from a single dc power supply, variations in the relatively large current drawn by the power amplifier can appear as supply voltage variations at the preamplifier. These variations can be large compared to the operating signal levels in the preamplifier; the unwanted variations are amplified along with the desired signals and may produce distortion in the output of the amplifier.

Another set of paths for conductive coupling of interference is offered by the signal lines. In general, signal lines enter each facility and each unit or piece of equipment; i.e., such signal lines are usually necessary for interfacing electronic circuits. Interference can be conductively coupled into facilities, equipment, and circuits as readily by signal lines as by power lines.

The signal reference plane is another potential coupling path for unwanted signals between equipments and/or circuits. Since practical signal reference planes do not exhibit a zero impedance, any currents flowing in a signal reference plane will produce potential differences (voltages) between various points on the reference plane. Interfacing circuits referenced to these various points can experience conductively coupled interference in the manner illustrated by Figure 6-5. The signal current I_1, flowing in Circuit 1 of Figure 6-5 returns to its source through signal reference impedance Z_R producing a voltage drop E_{N1} in the reference plane. The impedance Z_R is common to Circuit 2, hence E_{NI} appears in Circuit 2 as a voltage in series with the desired signal voltage source, E_{S2}. This undesired source produces an interference voltage, V_{N2}, across the load of Circuit 2; similarly, the desired current, I_2, in Circuit 2 will produce interference in Circuit 1.

In a facility, the conductive coupling of interference through the signal reference plane of interfaced equipment can occur in a manner similar to that described above for internal circuitry. If Circuit 1 in Figure 6-5 represents two interfaced equipments and if Circuit 2 represents a different pair of interfaced equipments, then a current flowing in either circuit can produce interference in the other circuit as described. Even if the pairs of equipments do not use the signal reference plane as the signal return, the signal reference plane can still be the cause of coupling between equipments. Figure 6-6 illustrates the effect of a stray current, I_R, flowing in the reference (or ground) plane. I_R may be the result of the direct coupling of another pair of equipments to the signal reference plane, or it may be the result of free-space coupling to the signal reference plane. In either case, I_R produces a voltage E_N in the reference plane impedance, Z_R. This voltage produces a current in the interconnecting loop which in turn develops a voltage across Z_L, in Equipment B. Thus, it is evident that interference can conductively couple via the signal reference plane to all circuits and equipments connected across the non-zero impedance elements of that reference plane.

6.2.2 Free-Space Coupling.

Free-space coupling is the transfer of electromagnetic energy between two or more circuits not directly interconnected with a conductor. Depending on the distance between the circuits, the coupling is usually defined as either near-field or far-field. Near-field coupling can be subdivided into inductive and capacitive coupling, according to the nature of the electromagnetic field. In inductive coupling, a magnetic field linking the susceptible device or circuit is set up by the interference source or circuit. Capacitive coupling is produced by an electric field between the interference source and the susceptible circuit.

Radiation of energy by electromagnetic waves is the principle coupling mechanism in far-field coupling. The term “radiated coupling” is sometimes used to describe both near-field (inductive and capacitive) coupling and far-field coupling. However, radiated coupling is generally accepted to mean the transfer of energy from a source to a susceptible circuit by means of electromagnetic waves propagating through space according to the laws of wave propagation.

6.2.2.1 Near-Field Coupling.

When two or more wires or other conductors are located near each other, currents and voltages on one wire will be inductively and capacitively coupled to the other wires. The wire acting as the interference source for this near-field coupling may be any conductor such as a high level signal line, an ac power line, a control line,or even a lightning down conductor. The currents or voltages induced into the other wires can further be conductively coupled into susceptible circuits.

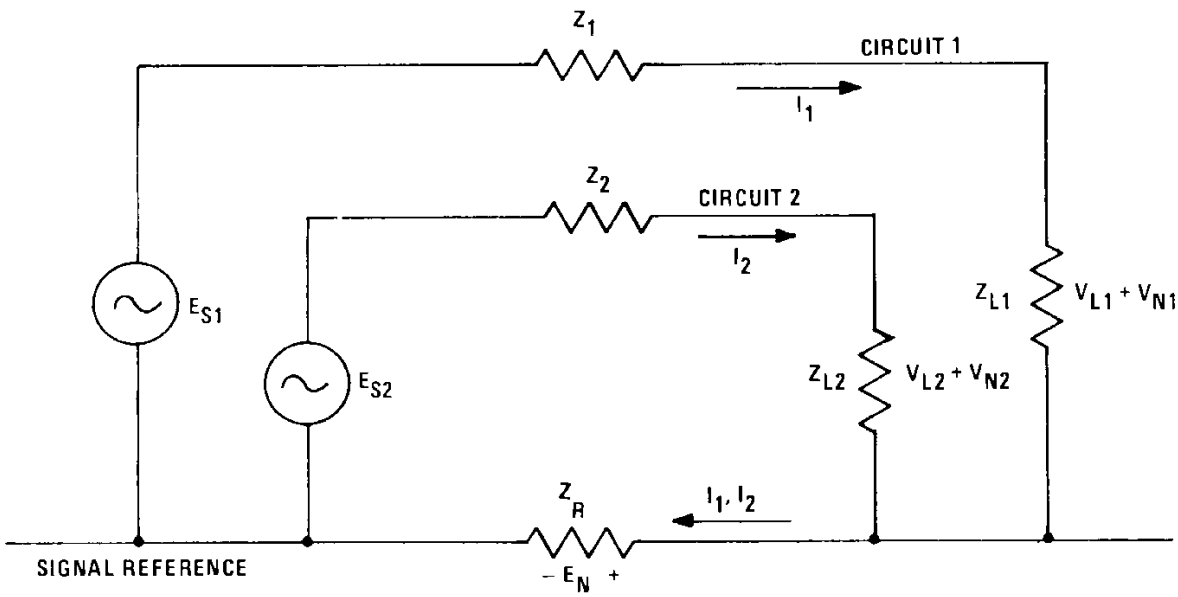

Figure 6-5. Coupling Between Circuits Caused by Common Return Path Impedance

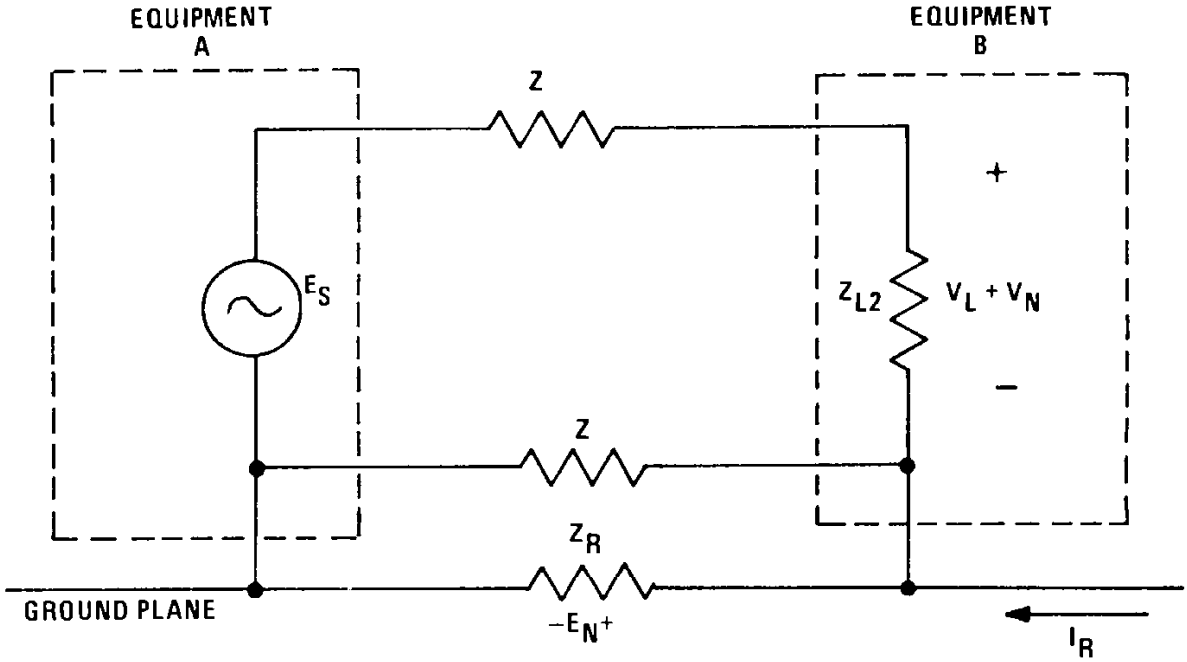

Figure 6-6. Conductive Coupling of Extraneous Noise into Equipment Interconnecting Cables

6.2.2.2 Inductive Coupling. The magnetic field surrounding a long, straight, current-carrying wire as shown in Figure 6-7 is the means for inductive coupling. This field can be determined from Ampere's law (6-1):

$$\oint \underline{H} \cdot d\underline{\ell} = i(t), \tag{6-1}$$

where $\underline{H}$ is the magnetic field strength and $d\underline{\ell}$ is a small element of length along the path of integration (any closed loop around the current i(t)). Choosing a circle of radius r for the integration path in Equation 6-1 allows one to derive an expression for the magnetic field:

$$H = \frac{i(t)}{2\pi r} \text{ Amperes/meter.} \tag{6-2}$$

Thus the magnetic field strength surrounding a long straight wire carrying a current i is inversely proportional to the distance r from the wire, i.e., H decreases as the distance from the wire increases.

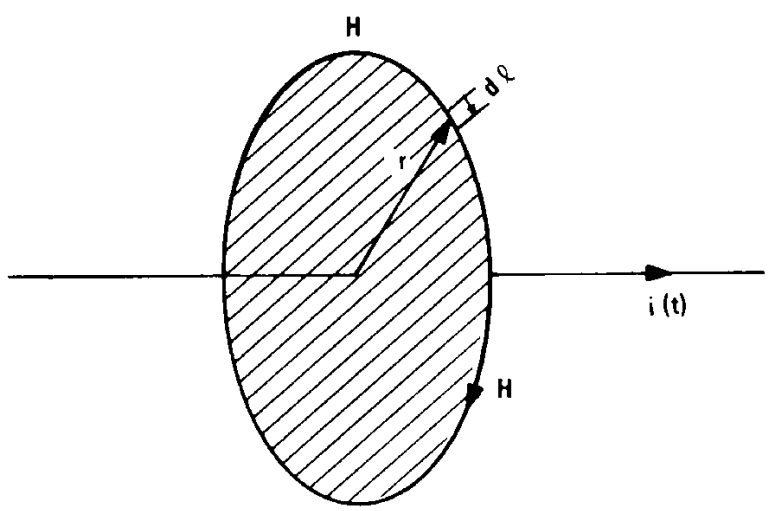

Figure 6-7. Magnetic Field Surrounding a Current-Carrying Conductor

This magnetic field will induce a voltage into a nearby signal circuit loop as illustrated in Figure 6-8. According to Faraday's law (6-1), the induced voltage is

$$v_i(t) = -\frac{d\psi}{dt} \quad \text{volts,} \tag{6-3}$$

where $v_i(t)$ is the induced voltage and ψ is the total magnetic flux linking the susceptible circuit loop. This magnetic flux is given by

$$\psi = \int_S \underline{B} \cdot d\underline{s} \ ,$$

$$= \mu \int_S \underline{H} \cdot d\underline{s} \quad \text{webers,} \tag{6-4}$$

where $B = \mu\underline{H}$ is the magnetic flux density, μ is the absolute permeability of the medium, and $\underline{ds}$ is a small element of the loop area. Substituting Equation 6-2 into Equation 6-4 and integrating over the area of the loop in Figure 6-8 gives

$$\psi = \frac{\mu \ell i(t)}{2\pi} \ln\left(\frac{r_2}{r_1}\right) \quad \text{webers,} \tag{6-5}$$

where r_1 and r_2 are the distances from i(t) to the two sides of the loop which are parallel to i(t), and ℓ is the length of each of these sides (in meters). This equation gives the total magnetic flux linking a susceptible

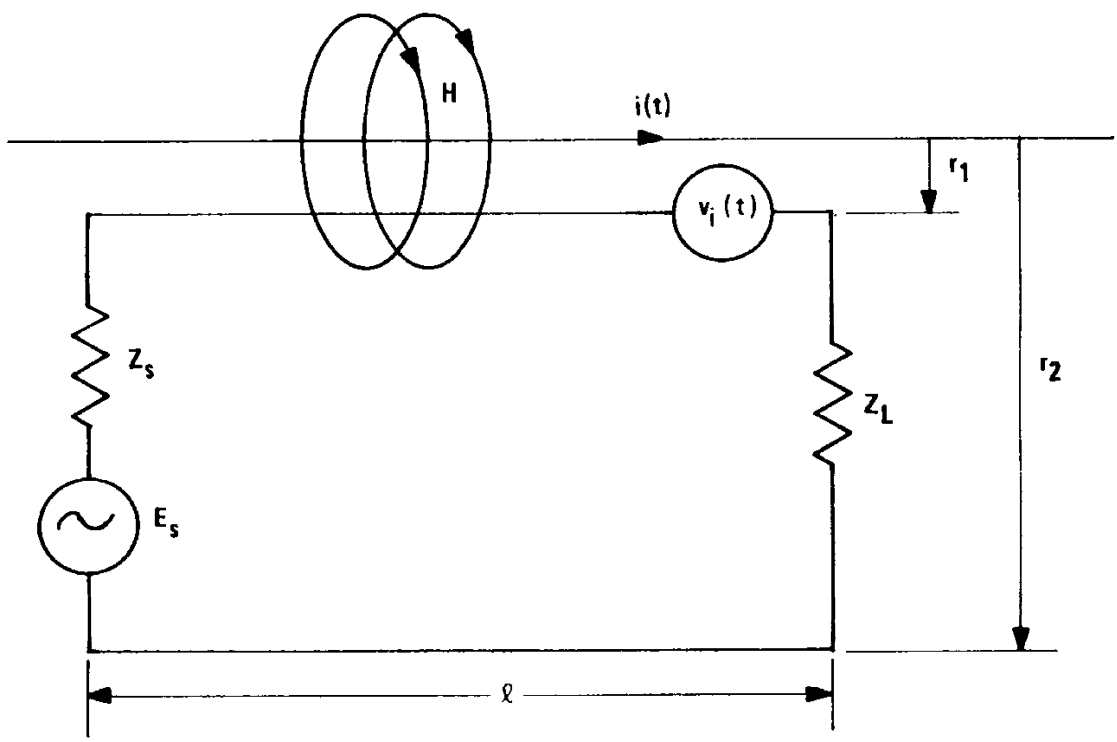

Figure 6-8. Illustration of Inductive Coupling

circuit loop in terms of the current flowing in a nearby conductor parallel to the sides of the loop. Substituting the total magnetic flux from Equation 6-5 into Equation 6-3 gives the voltage vi(t), induced in the circuit loop:

$$v_i(t) = \frac{-\mu \ell}{2\pi} \frac{di}{dt} \ln \left(\frac{r_2}{r_1}\right) \quad \text{volts.} \tag{6-6}$$

In free space, $\mu = 4\pi \times 10^{-7}$ henrys/meter, and Equation 6-6 reduces to

$$v_i(t) = -2 \times 10^{-7} \ell \frac{di}{dt} \ln \left(\frac{r_2}{r_1}\right) \quad \text{volts.} \tag{6-7}$$

If the interference current in the nearby conductor is sinusoidal, i.e.,

$$i(t) = I_m \cos(\omega t + \theta) \ , \tag{6-8}$$

then the maximum value of di/dt is

$$\left|\frac{di}{dt}\right|_{max} = \omega I_m = 2\pi f I_m \ , \tag{6-9}$$

and the maximum value of the induced voltage in Equation 6-6 is

$$\left|v_i\right|_{max} = \mu \ell f I_m \ln \frac{r_2}{r_1} \ , \tag{6-10}$$

where f is the frequency of i(t).

In Equations 6-6 and 6-7, the induced voltage vi (t) in a circuit loop with sides parallel to a current i(t) is expressed in terms of the dimensions of the loop, the distance of the loop from the current i(t) and time rate of change of i(t). As can be seen from these equations, the induced voltage in a susceptible circuit loop increases with an increase in the loop area (either an increase in ℓ or r_2 or both), the frequency, f, or the time rate of change, dl/dt, of the interfering sources, and increases with a decrease in the distance, r_1, between the interfering source and the loop.

The preceding equations indicate that the induced voltage is independent of the impedance of the susceptible circuit loop; i.e., the amplitude of the induced voltage is the same in a high impedance circuit as it is in a low impedance circuit. The desired signal voltages in low impedance circuits, however, are generally much lower than in high impedance circuits. Therefore, in low impedance circuits the induced voltage can be high relative to the signal voltage and thus more likely to produce significant interference in the circuit load. In high impedance circuits the saline induced voltage may be small compared to the circuit signal voltages and thus not create any problems. For these reasons, 1ow impedance circuits are usually more susceptible to inductive coupling than are high impedance circuits.

6.2.2.3 Capacitive Coupling. When signal conductors of two circuits are near each other as shown in Figure 6-9, a capacitance, Cc exists between the conductors. The value of this capacitance is a function of the geometry of the signal lines. For parallel wires, C_c is given by (6-2).

$$C_c = \frac{1.21}{\log\left(\frac{2r_c}{d}\right)} \times 10^{-11} \quad \text{farads/meter,} \tag{6-11}$$

where r_c is the distance between the two lines and d is the diameter of the wires. In a similar manner, a capacitance exists between each signal line and its return. If the signal line is parallel to its return, these capacitances can be calculated using Equation 6-11 by replacing r_c with r_1 and with r_2 (see Figure 6-9).

The interference source voltage, $v_s(t)$ produces a current flow through the mutual capacitance, Cc, between the two signal conductors and develops an induced voltage, vi(t), in the susceptible circuit. The equivalent circuit for Figure 6-9 is given in Figure 6-10(a) where the parallel combination of Z_{S2} and Z_{L2} has been replaced by the equivalent impedance

$$Z_2 = \frac{Z_{S2}Z_{L2}}{Z_{S2} + Z_{L2}}, \tag{6-12}$$

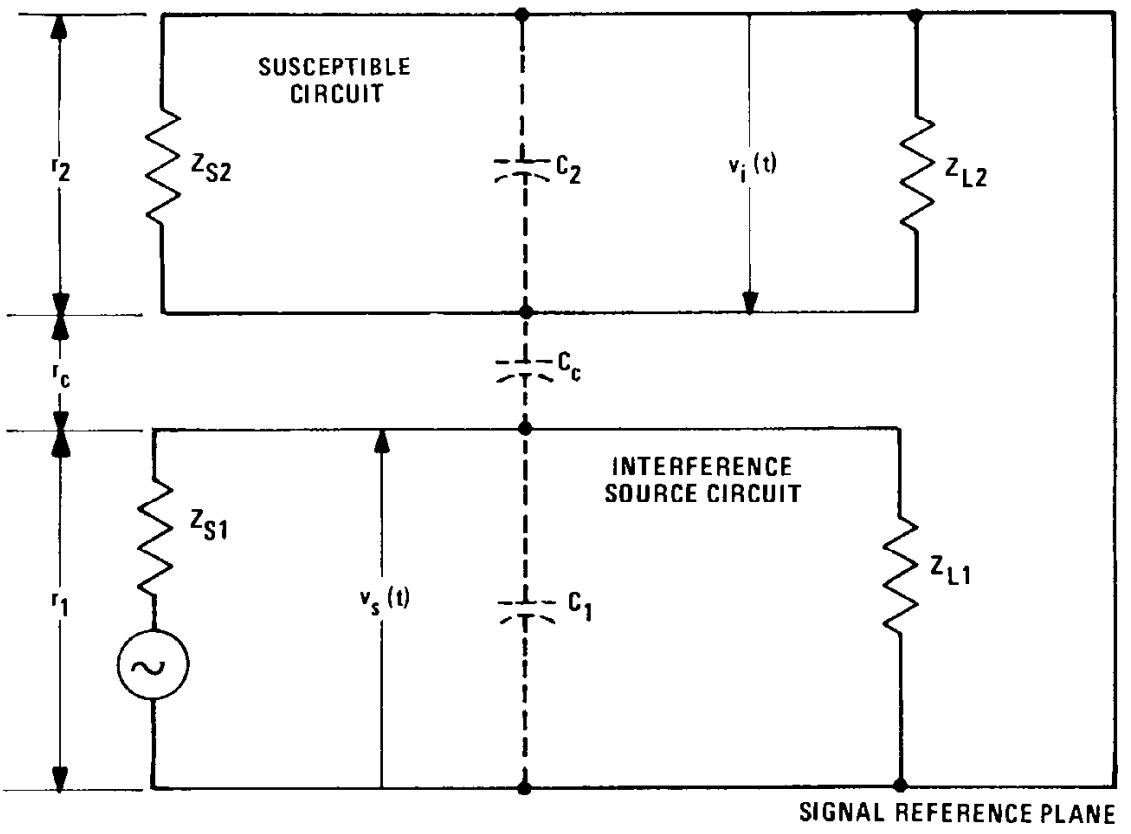

Figure 6-9. Illustration of Capacitive Coupling

and time-varying voltages have been replaced by their ac steady state phasors. The induced voltage (ac steady state assumed) in the susceptible circuit is

$$V_i = \frac{Z_{C2}Z_2/(Z_{C2} + Z_2)}{Z_{CC} + Z_{C2}Z_2/(Z_{C2} + Z_2)} V_s , \tag{6-13}$$

where

$$Z_{C2} = \frac{1}{j\omega C_2} \tag{6-14}$$

and

$$Z_{CC} = \frac{1}{j\omega C_c} . \tag{6-15}$$

Substitution of Equations 6-14 and 6-15 into Equation 6-13 yields

$$V_i = \frac{j\omega Z_2 C_c}{1 + j\omega Z_2(C_2 + C_c)} V_s , \tag{6-16}$$

where $\omega = 2\pi f$. If $j\omega Z_2 C_2 << 1$, Which is generally true at lower frequencies, the equivalent circuit of Figure 6- 10(b) is applicable and

$$V_i \simeq j2\pi f Z_2 C_c V_s . \tag{6-17}$$

At higher frequencies, the equivalent circuit of Figure 6-10(c) is applicable and

$$V_i \simeq \frac{C_c}{C_2 + C_c} V_s . \tag{6-18}$$

These equations illustrate the induced voltage, V_i, which is capacitively coupled into a susceptible signal circuit from a nearby signal conductor, is dependent on the amplitude and frequency of the interference source voltage, V_s, the values of the coupling capacitance, Cc, the stray capacitance in the susceptible circuit, C_2, and on the magnitude of the impedance of the susceptible circuit. At low frequencies, Equation 6-17 indicates that the induced voltage increases with either an increase in the coupling capacitance or an increase in the impedance of the susceptible loop. Similarly, at high frequencies the induced voltage as given in Equation 6-18 increases with either an increase in the coupling capacitance or a decrease in the stray capacitance of the susceptible circuit. It should also be noted that the value of the interference source voltage, V_s, depends upon the stray capacitance in the interference source circuit, C_1 in Figure 6-9.

If the impedance of the susceptible circuit is totally resistive, i.e., if $Z_2 = R_2$, the induced voltage is given by Equation 6-16 as

$$V_i = \frac{j2\pi f R_2 C_c}{1 + j2\pi f R_2 (C_2 + C_c)} V_s , \tag{6-19}$$

and the magnitude of the ratio of the induced voltage to the interference (sinusoidal) voltage is

$$\left| \frac{V_i}{V_s} \right| = \sqrt{\frac{(2\pi f R_2 C_c)^2}{1 + (2\pi f R_2 (C_2 + C_c))^2}} ,$$

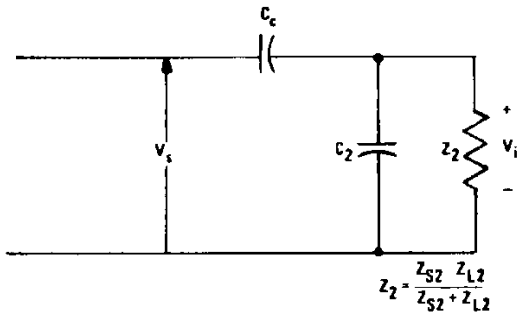

(a) TRUE EQUIVALENT CIRCUIT

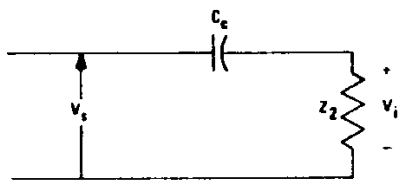

(b) LOW FREQUENCY APPROXIMATION

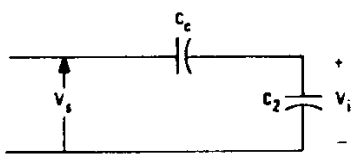

(c) HIGH FREQUENCY APPROXIMATION

Figure 6-10. Equivalent Circuit of Network in Figure 6-9

$$= \frac{C_c}{C_2 + C_c} \sqrt{\frac{R_2^2}{R_2^2 + \left[\frac{1}{2\pi f(C_2 + C_c)}\right]^2}} \quad (6\text{-}20)$$

This ratio increases almost linearly with R_2 until R_2 approaches the value $\frac{1}{2\pi f(C_2 + C_c)}$; i.e., the reactance of C_2 and C_c in parallel. For larger values of R_2, the ratio asymptotically approaches $C_c/(C_2 + C_c)$. The behavior of this voltage ratio with frequency is illustrated in Figure 6-11. The ratio is zero at dc and asymptotically approaches $C_c/(C_2 + C_c)$ as the frequency is increased. Equation 6-20 and Figure 6-11 illustrate again that the voltage capacitively coupled into the susceptible circuit increases with an increase in the total resistance of the circuit and with an increase in frequency. Resonances can occur and change the amount of capacitive coupling if the impedance of the susceptible circuit contains inductive reactance, but such resonances usually only produce noticeable effects at higher frequencies.

6.2.2.4 Far-Field Coupling.

Radiation is the means by which energy escapes from a conductor and propagates into space. The conductor does not have to be specifically designed to radiate energy; it may be any current carrying conductor, e.g., a signal line, a power line, or even a ground lead.

Algebraic expressions for the electromagnetic fields surrounding a current carrying conductor are usually expressed as the sum of three terms. Each term is inversely proportional to a power of the distance, r, from the conductor, i.e., each term is proportional to either $1/r$, $1/r^2$, or $1/r^3$. Close to the conductor (near field), the $1/r^2$ and $1/r^3$ components dominate and the electromagnetic energy oscillates between the space surrounding the conductor and the conductor itself; zero average energy is propagated by the near field terms.

Outside the near field region, the $1/r$ term predominates. In this far field region, radiated energy that has escaped is propagating away from the "antenna" through space. The mechanism of energy radiation can be visualized (6-3) by considering the finite time required for the electromagnetic fields to propagate between two points in space. Current flows through an antenna at the frequency of the applied signal, and the polarity of the field produced by this current is reversed at this same frequency. When a positive charge is present at one end of the antenna, an equal but, negative charge is present at the other end and an electric field in the vicinity of the antenna will be established between the charges. As the current changes direction, the charges will reverse positions; the electromagnetic field will collapse and be re-established in the opposite direction. If the frequency of the applied signal is low, sufficient time will exist between reversals for practically all the energy stored in the field to be returned to the circuit and very little radiation will occur. If, however, the frequency is high and the charges reverse quickly, a field in the opposite direction is formed near the wire before a substantial amount of the field energy can return to the circuit. This part of the field is thus separated from the antenna and propagates outward through space as an electromagnetic wave.

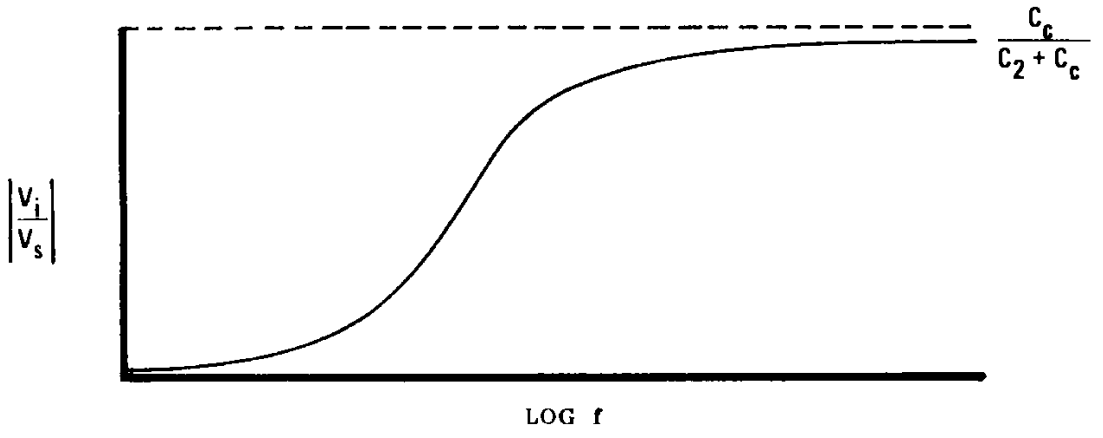

Figure 6-11. Characteristic Voltage Transfer Curve for Capacitive Coupling

This method of visualizing radiation from a wire or antenna is illustrated for a dipole antenna in Figure 6-12. Figure 6-12(a) shows a dipole when the charges are maximum at the ends of the antenna. As the current flow reverses directions and the charges move back toward the center, the electric field lines collapse as in (b). Since the field moves with a finite velocity, there is not enough time for all the field lines to return to the antenna. When the ends of these lines meet at the center of the antenna and the charge on the antenna is zero, the field lines that have not collapsed will close on themselves and continue to exist as closed loops as illustrated in (c). The antenna charges move in the opposite direction as shown in (d), and the oppositely directed electric field pushes away the previously detached loop as shown in (e). This procedure continues with the fields in the opposite direction, and a cycle is completed when the fields near the antenna return to their original state. These cycles repeat at the frequency of the applied signal, and an electromagnetic field propagates outward from the antenna at the speed of light. Although only the electric field is illustrated, there is an associated magnetic field in accordance with Maxwell's equations (6-1). The magnetic field consists of concentric circles surrounding the antenna and expanding radially as the electric field propagates outward. These outward propagating electric and magnetic fields represent energy flowing away from the antenna. Therefore, the antenna radiates energy into the surrounding space.

In a reciprocal manner, wires and conductors located in a radiated field have currents induced in them and act as receiving antennas for incident electromagnetic energy. These induced currents in the wires can then be conducted into associated signal circuitry as interference (see Section 6.2.1). The amplitude of the resulting interference depends on the strength of the electromagnetic field in the vicinity of the wire and on the efficiency of the wire as an antenna. The strength of this field is a function of the distance from the radiating wire, the efficiency of the radiating wire as an antenna, and the amplitude and frequency of the signal on the radiating wire. The efficiency of a wire or other conductor as either a receiving or a radiating antenna is a function of the length of the wire relative to the wavelength of the signal.

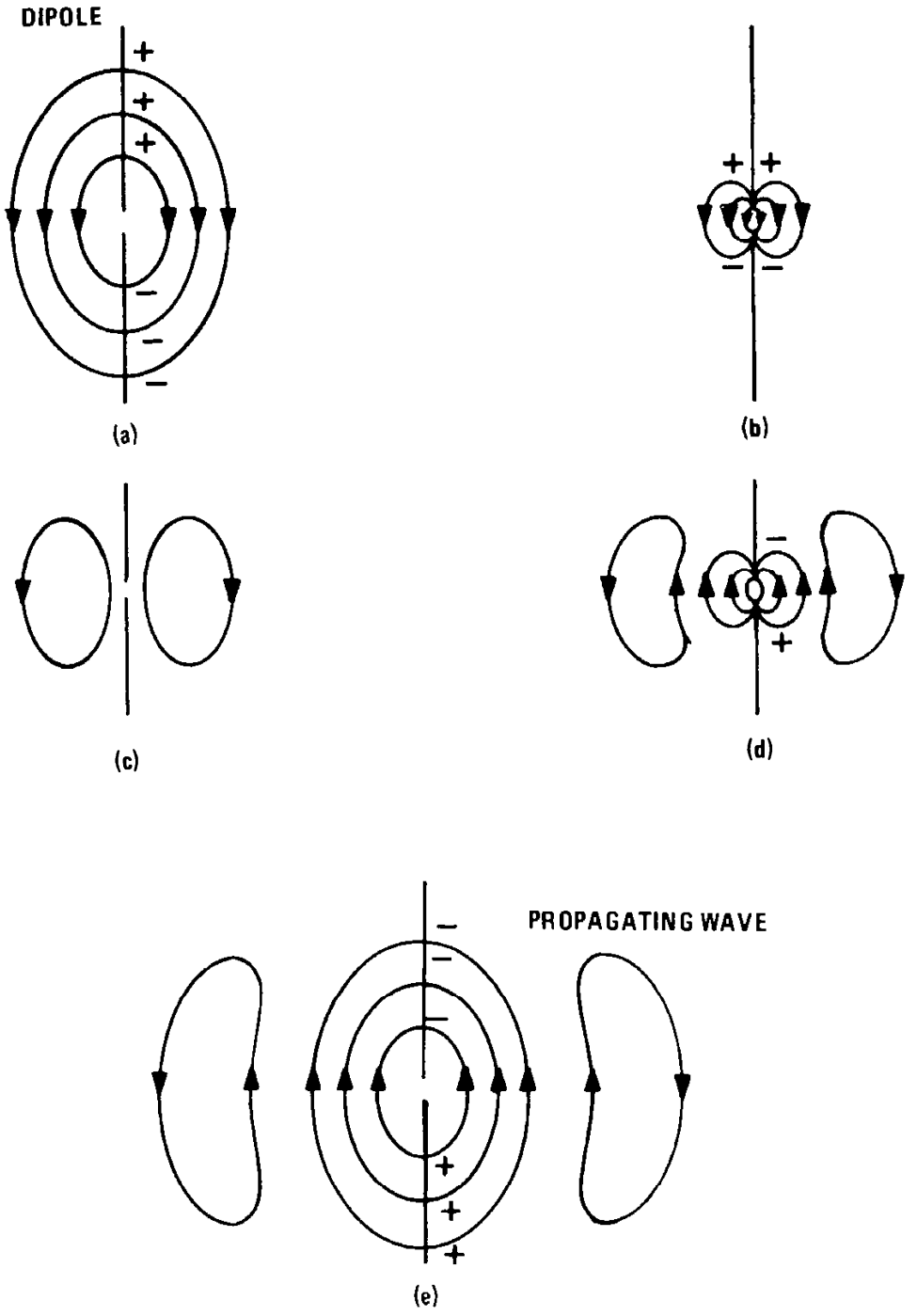

Figure 6-12. Electric Field Patterns in the Vicinity of a Radiating Dipole

One way of evaluating the efficiency of a wire as an antenna is to compare its radiation resistance with the radiation resistance of a quarter-wave ($\lambda/4$) antenna. The radiation resistance of an antenna is the resistance which would consume the same amount of power as is radiated by the antenna. Thus the radiation resistance is a direct measure of the energy radiated from the antenna. A monopole antenna one-quarter of a wavelength long has a radiation resistance of 36.5 ohms (6-4). An antenna which transmits or receives ten percent or less of the energy that would be transmitted or received by a $\lambda/4$ monopole can be considered relatively inefficient. Thus an inefficient antenna would exhibit a radiation resistance of 3.65 ohms or less. Monopoles of length $\lambda/11$ meet this criterion (6-4). Greater convenience in calculations results if $\lambda/10$ is choosen instead of $\lambda/11$. Thus $\lambda/10$ is chosen to represent the length below which a conductor does not perform effectively as an antenna.

6.3 COMMON-MODE NOISE.

Common-mode noise is an unwanted noise voltage which appears identically on both sides of a signal line when measured from the system ground or common point. It, like normal-mode noise, can be caused by resistive coupling, capacitive coupling, or magnetic coupling from the unwanted source. In addition, many measuring transducers intentionally have a dc or ac common-mode voltage present on both output lines, the presence of which is necessary for proper operation of the transducer. Although not a noise source, these common-mode voltages require careful design and use of data and instrumentation amplifiers to prevent interference with the desired signal components.

The source of most common-mode noise is resistive coupling between separate ground points in a circuit or system. A simple example of this is illustrated in Figure 6-13. An oscilloscope probe is used to couple a signal from some point in a circuit to the oscilloscope terminals. The probe ground is connected to circuit ground which is in turn referenced through the facility ground system. Since there are generally currents flowing in the facility ground system (these are primarily at the 60 Hz power line frequency), it follows that the ground reference potential for the circuit is different from that for the oscilloscope. This difference in potential is produced by the flow of the stray ground currents through the impedance of the facility ground system. Thus, both the ground reference for the circuit and the signal point in the circuit have identical noise voltages impressed on them with respect to the ground reference for the oscilloscope. This noise is called common-mode noise by virtue of the fact that is common to all points in the circuit, including the circuit ground. Not only do these noise sources introduce measurement errors but they also produce interference between interconnected equipments.

Resistively coupled coimmon-mode noise can also occur in a single equipment rather than between equipments. The coupling arises from multiple signal currents and power frequency currents flowing in a common ground lead, chassis, or ground plane.

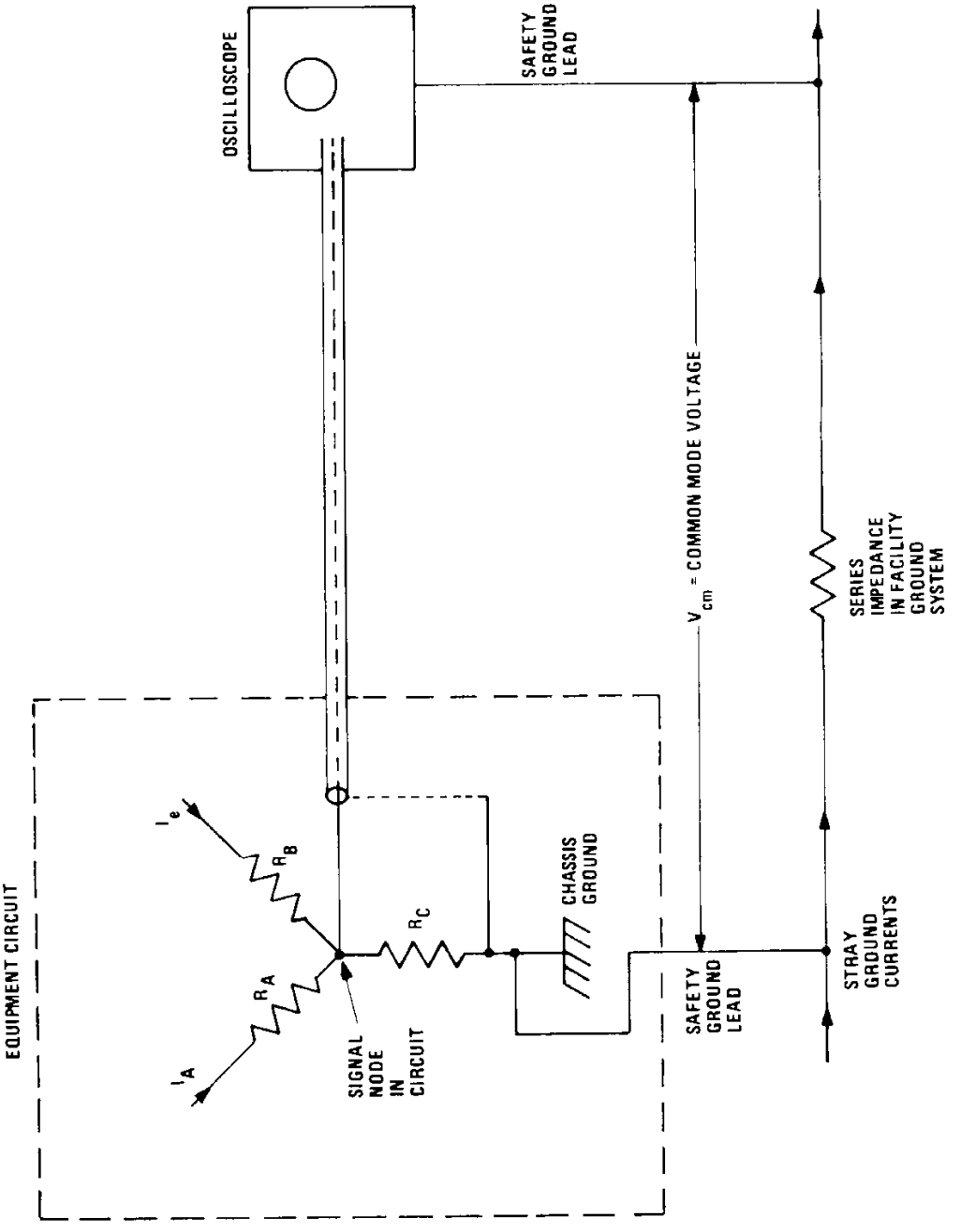

Figure 6-13. Illustration of Conductively-Coupled Common-Mode Noise

6.3.1 Basic Theory of Common-Mode Coupling.

The mechanism of common-mode coupling can be explained with reference to Figure 6-14. In this figure, V_s represents some signal voltage from an unbalanced source, i.e., the output signal of some transducer or measuring amplifier, and R_s is the output impedance of this source. The source is connected to the input terminals of some electronic device which is modeled as a two-terminal pair amplifier in the figure. R_1 and R_2 are the series resistances in the interconnecting cables between the source and amplifiers. The voltage source V_{cm} with output resistance Rein represents a common-mode noise voltage source which causes the signal source to be at some voltage when measured with respect to the ground reference of the amplifier output. In Figure 6-14, the impedances Z_1 and Z_2 represent the input impedances of the two amplifier terminals. In a differential amplifier, these impedances are normally very high, however, in a single ended amplifier, one is high and the other is very low since it is tied directly to the ground reference terminal.

The analysis of the circuit in Figure 6-14 is complicated enough to make it difficult to reach conclusions without excessive algebra. Normally, R_{cm} is small and can be neglected. With this approximation, it can be shown that the output voltage of the amplifier is given by

$$
\begin{aligned}
V_o &= KV_x \qquad (6\text{-}21)\\
&= K\left(\frac{Z_1}{R_s + R_1 + Z_1} - \frac{Z_2}{R_2 + Z_2}\right) V_{cm}\\
&\quad + \left(\frac{KZ_1}{R_s + R_1 + Z_1}\right) V_s \quad ,
\end{aligned}
$$

where K is the voltage gain of the amplifier.

There are two signal contributions to the output signal V_o in Equation 6-21: the desired signal and the undesired common-mode noise. There are three ways in which the common-mode noise term can be reduced. These are as follows:

a. Decrease V_{cm} - By decreasing V_{cm}, the common-mode noise voltage at the output terminals decreases proportionally.

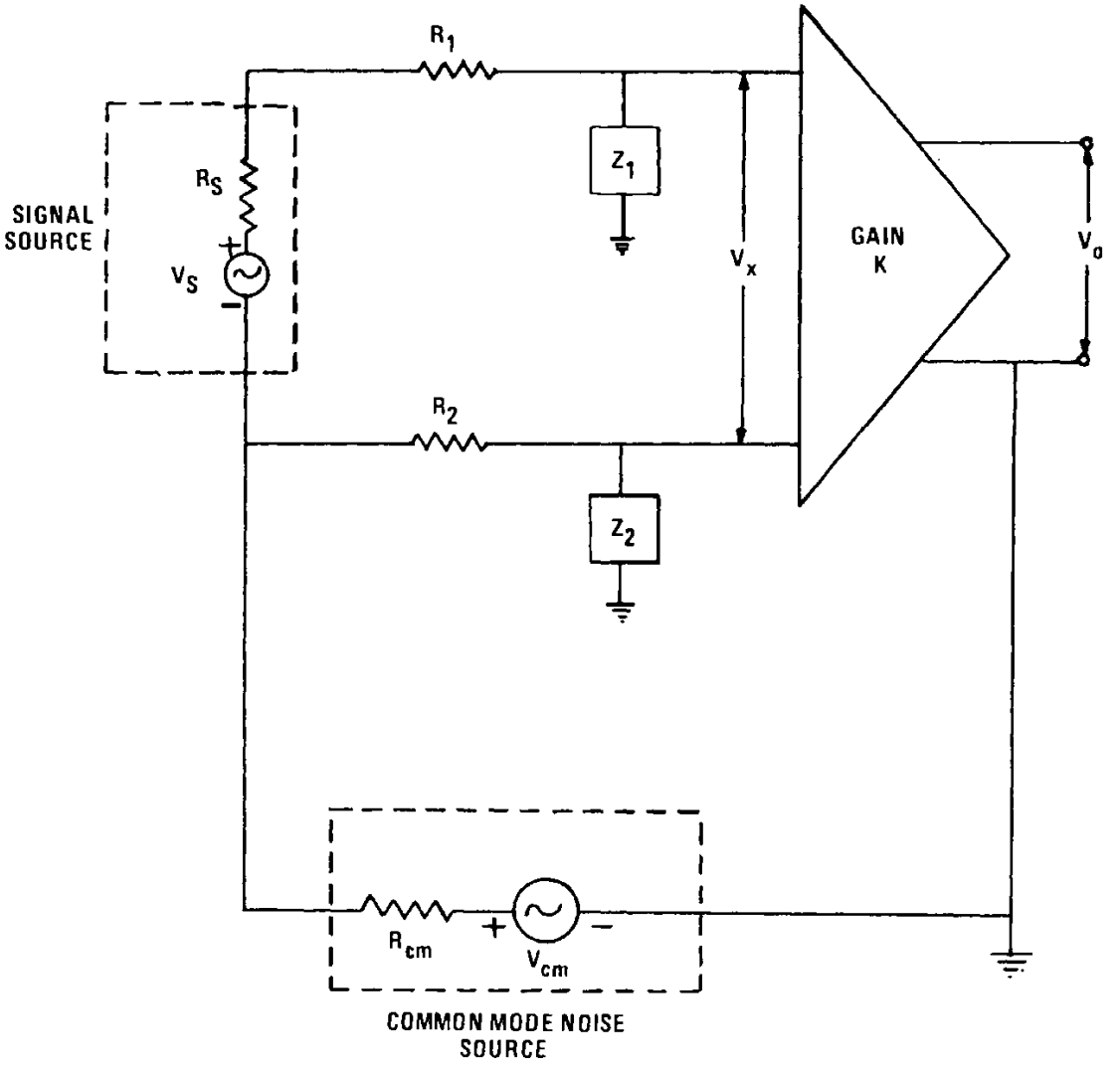

Figure 6-14. Common-Mode Noise in Unbalanced Systems

b. Balance the Two Amplifier Inputs - If R_1 and R_2 are manipulated such that

$$\frac{Z_1}{R_s + R_1 + Z_1} = \frac{Z_2}{R_2 + Z_2}, \tag{6-22}$$

the common-mode noise voltage at the amplifier output terminals can be made to vanish.

c. Increase Z_1 and Z_2 - If Z_1 is sufficiently large compared to $R_s + R_1$, and Z_2 is sufficiently large compared to R_2, then the common-mode noise voltage at the amplifier output terminals will be diminished. This approach normally requires a differential amplifier with carefully shielded input signal lines.

In the case of balanced signal sources or transducers, the basic circuit and equations differ from those given in Figure 6-14 and by Equation 6-21. Figure 6-15 shows a balanced source with an output voltage V_s and output resistance R_s connected to the two inputs of an amplifier. In this case, the center tap of the source is connected to the ground reference terminal. As before, if it is assumed that R_{cm} is small, it can be shown that V_o is given by

$$V_o = KV_x,$$

$$= \left(\frac{Z_1}{\frac{R_s}{2} + R_1 + Z_1} - \frac{Z_2}{\frac{R_s}{2} + R_2 + Z_2} \right) V_{cm}$$

$$+ K \left(\frac{Z_1}{\frac{R_s}{2} + R_1 + Z_1} + \frac{Z_2}{\frac{R_s}{2} + R_2 + Z_2} \right) \frac{V_s}{2} \tag{6-23}$$

The same conclusions regarding the minimization of the common-mode noise component at the amplifier output apply in this circuit as for the unbalanced source. However, in this case the amplifier must have a differential input stage. Otherwise, one-half of the source would be shorted out. In Figure 6-14, the amplifier can have single-ended or differential inputs.

The common-mode rejection (CMR) ratio of an amplifier is the gain of the amplifier (K) multiplied by the common-mode noise voltage (V_{cm}) and divided by the amplifier output due to V_{cm}. The CMR ratio describes a circuit's ability to avoid converting common-mode noise to normal-mode noise. Expressed as a positive quantity, the CMR ratio is given by

$$CMR = \left| \frac{KV_{cm}}{V_o} \right|_{V_s = 0} \tag{6-24}$$

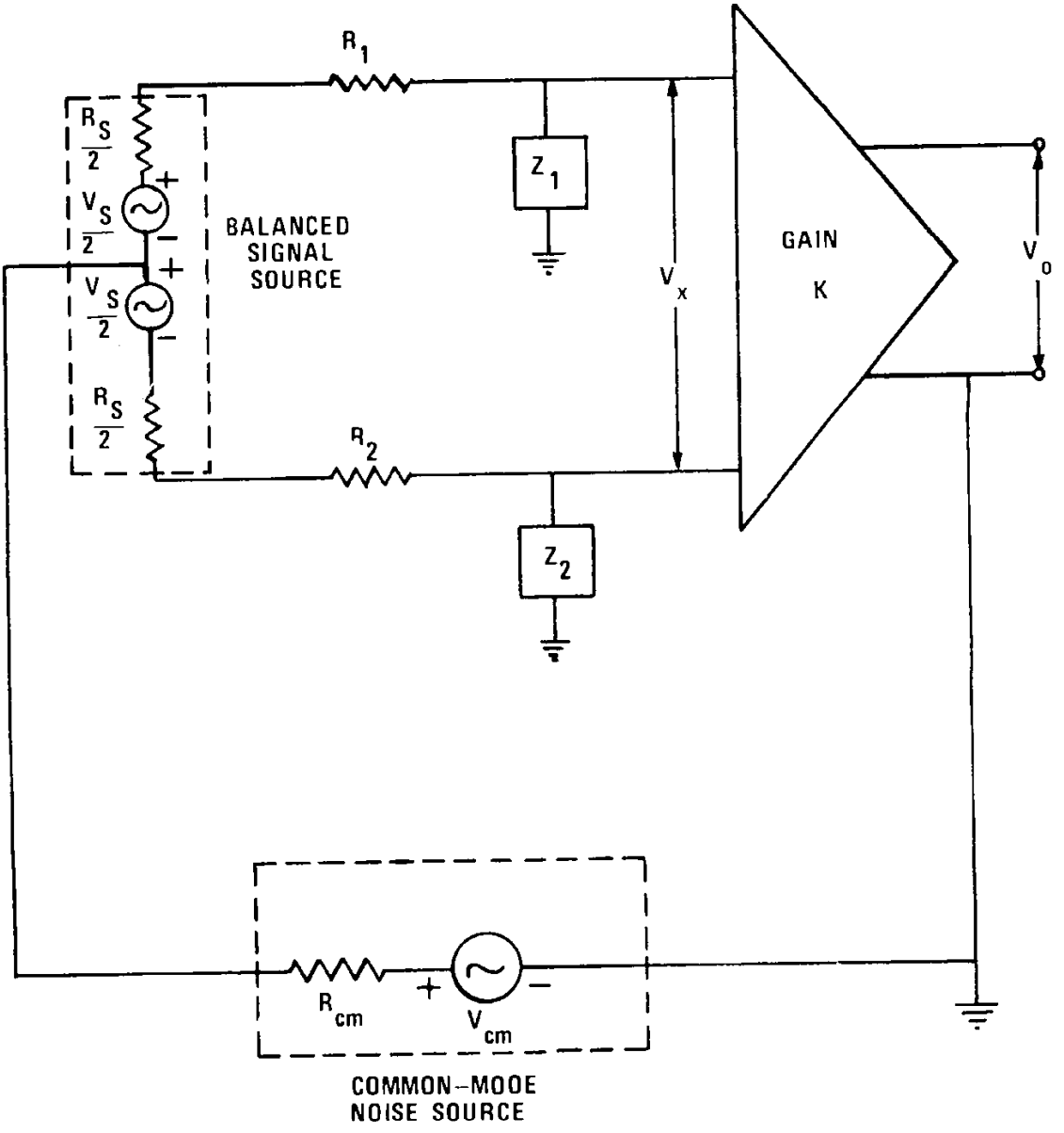

Figure 6-15. Common-Mode Noise in Balanced Systems

Ideally, the CMR of an amplifier should be infinite, or as large as possible. Under the worse case conditions, CMR = 1. As it is defined, the CMR conveys a measure of how well the amplifier can reject a common-mode noise signal at its input. Typical values for a good differential amplifier with balanced input impedances are in the vicinity of CMR = 1000. Often this is expressed in decibels which, in this case, would be CMR = 60 dB.

The CMR for the amplifier in Figure 6-14 is easily derived from Equation 6-21 to be

$$\mathrm{CMR} = \left| \frac{1}{\dfrac{Z_1}{R_s + R_1 + Z_1} = \dfrac{Z_2}{R_2 + Z_2}} \right| \qquad (6\text{-}25)$$

6.3.2 Differential Amplifier. A differential amplifier is designed to make Z_2 large compared to R_2 and Z_1 large compared to $R_1 + R_S$. Since Z_1 and Z_2 are normally functions of frequency, it can be seen that the CMR will also be a function of frequency. Typically Z_1 and Z_2 are resistors shunted by capacitors. Thus, it can be seen that the CMR will inevitably decrease with increasing frequency when the capacitive reactance becomes smaller than the resistor. Consequently, a high CMR is difficult to achieve at high frequencies.

6.4 MINIMIZATION TECHNIQUES. Signal interaction, i.e., interference, can be minimized by reducing the coupling between the signal systems by modifying the signal systems in such a manner that interaction between the systems does not produce interference in either one, by eliminating the source of the interference, and by filtering the interference out of the susceptible signal system.

6.4.1 Reduction of Coupling. The techniques for reducing coupling include minimizing the impedance of the reference plane, increasing the spatial separation between the signal systems, shielding the systems from each other, reducing the loop area of each signal system, and balancing the signal lines in each system.

6.4.1.1 Reference Plane Impedance Minimization. Minimizing the impedance of the signal reference plane lowers the potential difference between any two points in the reference plane, thereby reducing the conductive coupling of interference in susceptible circuits referenced to these points. The impedance of the signal reference plane is reduced by minimizing both the resistance (R) and the series reactance (X) of the conductors forming the reference plane. The resistance decreases with a decrease in either the length of the conductors or the signal frequency (because of skin effect - see Section 5.2.2.1) and with an increase in conductor cross-sectional area. The reactance also decreases with a decrease in the signal frequency and with a decrease in the inductance of the conductors; the inductance is a function of both the conductor length and cross-sectional area. The impedance of the signal reference plane can be reduced by making the reference plane conductors as short as possible and by using conductors with cross-sectional areas as large as practical. The overall impedance of the signal reference plane also depends upon the establishment of low impedance bonds between ground conductors. (The various aspects of bonding and bond resistance are discussed in Chapter 7.)

6.4.1.2 Spatial Separation. Inductive or capacitive coupling can be reduced by increasing the physical distance between signal circuits. As can be seen from Equation 6-6 and Equations 6-11 and 6-16, increasing the separation between the interfering circuit and the susceptible circuit exponentially decreases the voltage coupled into the susceptible circuit.

6.4.1.3 Reduction of Circuit Loop Area. Reducing the loop area of either the interference source circuit or the susceptible circuit will decrease the inductive coupling between the circuits. Equation 6-6 shows that the inductively coupled voltage can be minimized by reducing the length (ℓ) or the with ($r_2 - r_1$) of the susceptible circuit. This width can be minimized by running the signal return adjacent to the signal conductor and, hence, reducing the loop area of the susceptible circuit. A preferable approach is to twist the signal conductor with its return. The use of twisted wires reduces the inductively coupled voltages since the voltage induced in each small twist area is approximately equal and opposite to the voltage induced in the adjacent twist area.

6.4.1.4 Shielding. Another effective means for the reduction of coupling is the use of shields around the circuits and around interconnecting lines. Principles of shielding are presented in Chapter 8.

6.4.1.5 Balanced Lines.

In situations where signal circuits must be grounded at both the source and the load, and hence, establish conductive coupling paths, the use of balanced signal lines and circuits is an effective means of minimizing the conductively coupled interference. In a balanced circuit, the two signal conductors are symmetrical with respect to ground. At equivalent points on the two conductors the desired signal is opposite in polarity and equal in amplitude relative to ground. A common-mode voltage will be in phase and will exhibit equal amplitudes on each conductor and will tend to cancel at the load. The amount of cancellation depends upon the degree to which the two signal lines are balanced relative to ground.

If the signal lines are perfectly balanced, the cancellation would be complete and the coupled interference voltage at the load will be zero. If the source and load are not normally or cannot be operated in a balanced mode, balanced-to-unbalanced transformers or other coupling devices should be used at both the source and load ends of the signal line.

6.4.2 Alternate Methods.

Several alternate methods exist for minimizing interference besides the reduction of coupling. The first technique consists of actual circuit modification. For example, the signal frequency of either the interfering source or the susceptible circuit can be changed such that the signals do not interfere with one another. Similarly, the desired signal can be transposed to another frequency range or to a type of signal not affected by the noise. An example of the former is the conversion of the desired signal to VHF/UHF or microwave while an example of the latter is the use of acoustic coupling and electro-optical transmission. Through the use of one of these techniques, the frequency of transmission over that portion of the path susceptible to pickup is such

that the receiving and detection devices do not respond to the noise signal. As another option, the amplitude of the interference source or the sensitivity of the susceptible circuit can be decreased to reduce the interaction between the two circuits. Further, the type of modulation used in one or both circuits can be changed to minimize the interference.

Another technique is the elimination of the interference source. Although this may seem like a trivial solution, it is a valid alternative in many situations. For example, the source of interference may be a rusty joint which can be eliminated by proper bonding.

A third alternative is the use of filters. The majority of interfering signals, even if they are free-space coupled to the signal and power lines, are conductively coupled into the susceptible circuit. The proper application of filters to both the signal and power lines can reduce this coupling.

6.5 FACILITY AND EQUIPMENT REQUIREMENTS. The interference rejection principles identified in this chapter are responsible, in part, for many of the recommendations contained elsewhere in this volume and in Volume II. For example, intersite or interbuilding common-mode noise voltages in the earth contribute to the need for a low resistance of 10 ohms to earth at each facility. Even a resistance to earth of as low as 10 ohms may not, however, alleviate all common mode noise on a data cable connecting two separate locations or buildings. While a low resistance may help, there will always be potential differences between any two rods in the ground. The use of shielded, balanced twisted pair for all lower frequency equipment interfaces recommended in Volume II, is intended to provide additional common-mode rejection to those unavoidable noise voltages which exist in any facility. This is not to say that the sources of noise in a facility cannot be controlled. In fact, much can be done by equalizing the load between the phases of the ac distribution system; by insuring that the neutral is grounded only at the service disconnecting means as recommended in Volume II; and by limiting the quantity of leakage current from power line filter capacitors by using tile smallest acceptable value of capacitance or by sharing common filtered lines with several pieces of equipment.

6.6 REFERENCES.

6-1. J. D. Krause, Electromagnetics, McGraw-Hill Book Company, Inc, New York, (1953).

6-2. F. E. Terman, Radio Engineers' Handbook, McGraw-Hill Book Company, Inc, New York, (1943).

6-3. L.V. Blake, Antennas, John Wiley and Sons, Inc, New York NY, (1966).

6-4. E.C. Jordan, Electromagnetic Waves and Radiating Systems, Prentice-Hall, Inc, Englewood Cliffs NJ, (1950).

CHAPTER 7

BONDING

7.1 DEFINITION OF BONDING. As used in these Volumes, bonding refers to the process by which a low impedance path for the flow of an electric current is established between two metallic objects. Other types of bonding which involve simply the physical attachment of one substance or object to another through various mechanical or chemical means are not treated.

7.2 PURPOSES OF BONDING.

In any realistic electronic system, whether it be only one piece of equipment or an entire facility, numerous interconnections between metallic objects must be made in order to provide electric power, minimize electric shock hazards, provide lightning protection, establish references for electronic signals, etc. Ideally, each of these interconnections should be made so that the mechanical and electrical properties of the path are determined by the connected members and not by the interconnection junction. Further, the joint must maintain its properties over an extended period of time in order to prevent progressive degradation of the degree of performance initially established by the interconnection. Bonding is concerned with those techniques and procedures necessary to achieve a mechanically strong, low impedance interconnection between metal objects and to prevent the path thus established from subsequent deterioration through corrosion or mechanical looseness.

In terms of the results to be achieved, bonding is necessary for the:

a. protection of equipment and personnel from the hazards of lightning discharges,

b. establishment of fault current return paths,

c. establishment of homogeneous and stable paths for signal currents,

d. minimization of rf potentials on enclosures and housings,

e. protection of personnel from shock hazards arising from accidental power grounds, and

f. prevention of static charge accumulation.

With proper design and implementation, bonds minimize differences in potential between points within the fault protection, signal reference, shielding, and lightning protection networks of an electronic system. Poor bonds, however, lead to a variety of hazardous and interference-producing situations. For example, loose connections in ac power lines can produce unacceptable voltage drops at the load, and the heat generated by the load current through the increased resistance of the poor joint can be sufficient to damage the insulation of the wires which may produce a power line fault or develop a fire hazard or both. Loose or high impedance joints in

signal lines are particularly annoying because of intermittent signal behavior such as decreases in signal amplitude, increases in noise level, or both. Poor joints in lightning protection networks can be particularly dangerous. The high current of a lightning discharge may generate several thousand volts across a poor joint. Arcs produced thereby present both a fire and explosion hazard and may possibly be a source of interference to equipments. The additional voltage developed across the joint also increases the likelihood of flashover occurring to objects in the vicinity of the discharge path.

A degradation in system performance from high noise levels is frequently traceable to poorly bonded joints in circuit returns and signal referencing networks. As noted previously, the reference network provides low impedance paths for potentially incompatible signals. Poor connections between elements of the reference network increase the resistance of the current paths. The voltages developed by the currents flowing through these resistances prevent circuit and equipment signal references from being at the same reference potential. When such circuits and equipments are interconnected, the voltage differential represents an unwanted signal within the system.

Bonding is also important to the performance of other interference control measures. For example, adequate bonding of connector shells to equipment enclosures is essential to the maintenance of the integrity of cable shields and to the retention of the low loss transmission properties of the cables. The careful bonding of seams and joints in electromagnetic shields is essential to the achievement of a high degree of shielding effectiveness. Interference reduction components and devices also must be well bonded for optimum performance. Consider a typical power line filter like that shown in Figure 7-1. If the return side of the filter (usually the housing) is inadequately bonded to the ground reference plane (typically the equipment case or rack), the bond impedance Z_B may be high enough to impair the filter's performance. The filter as shown is a low pass filter intended to remove high frequency interference components from the power lines of equipment. The filter achieves its goal in part by the fact that the reactance, Xc, of the shunt capacitors is low at the frequency of the interference. Interfering signals present on the ac line are shunted to ground along Path 1 and thus do not reach the load. If Z_B is high relative to Xc, however, interference currents will follow Path 2 to the load and the effectiveness of the filter is compromised.

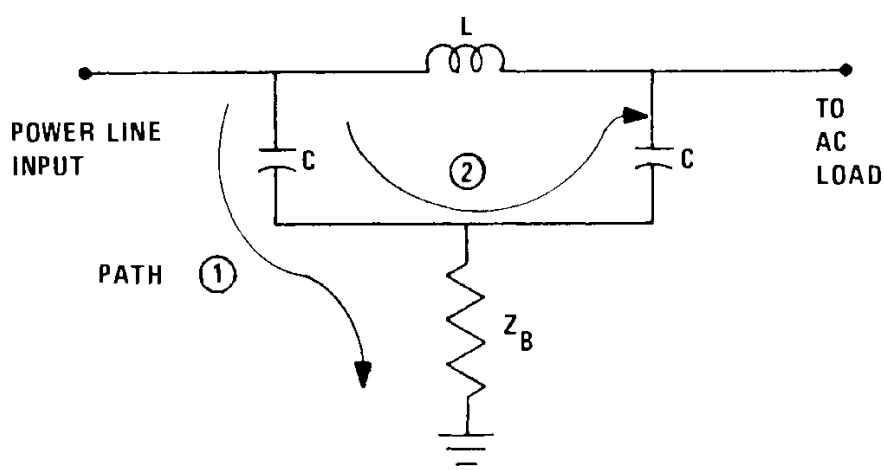

Figure 7-1. Effects of Poor Bonding on the Performance of a Power Line Filter

If a joint in a current path is not securely made or works loose through vibration, it can behave like a set of intermittent contacts. Even if the current through the joint is at dc or at the ac power frequency, the sparking which occurs may generate interference signals with frequency components up to several hundred megahertz.

Poor bonds in the presence of high level rf fields, such as those in the immediate vicinity of high powered transmitters, can produce a particularly troublesome type of interference. Poorly bonded joints have been shown to generate cross modulation and other mix products when irradiated by two or more high level signals (7-1). Some metal oxides are semiconductors and behave as nonlinear devices to provide the mixing action between the incident signals. Interference thus generated can couple into nearby susceptible equipments.

7.3 RESISTANCE CRITERIA.

A primary requirement for effective bonding is that a low resistance path be established between the two joined objects. The resistance of this path must remain low with use and with time. The limiting value of resistance at a particular junction is a function of the current (actual or anticipated) through the path. For example, where the bond serves only to prevent static charge buildup, a very high resistance, i.e., 50 kilohms or higher, is acceptable. Where lightning discharge or heavy fault currents are involved, the path resistance must be very low to minimize heating effects.

Noise minimization requires that path resistances of less than 50 milliohms be achieved. However, noise control rarely ever requires resistances as low as those necessary for fault and lightning currents. Bond resistance based strictly on noise minimization requires information on what magnitude of voltage constitutes an interference threat and the magnitude of the current through the junction. These two factors will be different for every situation.

A bonding resistance of 1 milliohm is considered to indicate that a high quality junction has been achieved. Experience shows that 1 milliohm can be reasonably achieved if surfaces are properly cleaned and adequate pressure is maintained between the mating surfaces. A much lower resistance could provide greater protection against very high currents but could be more difficult to achieve at many common types of bonds such as at connector shells, between pipe sections, etc. However, there is little need to strive for a junction resistance that is appreciably less than the intrinsic resistance of the conductors being joined.

Higher values of resistance tend to relax the bond preparation and assembly requirements. These requirements should be adhered to in the interest of long term reliability. Thus, the imposition of an achievable, yet low, value of 1 milliohm bond resistance ensures that impurities are removed and that sufficient surface contact area is provided to minimize future degradation due to corrosion.

A similarly low value of resistance between widely separated points on a ground reference plane or network ensures that all junctions are well made and that reasonably adequate quantities of conductors are provided throughout the plane or network. In this way, resistive voltage drops are minimized which helps with noise control. In addition, the low value of resistance tends to force the use of reasonably sized conductors which helps minimize path inductance.

It should be recognized that a low dc bond resistance is not a reliable indicator of the performance of the bond at higher frequencies. Inherent conductor inductance and stray capacitance, along with the associated standing wave effects and path resonances, will determine the impedance of the bond. Thus, in rf bonds these factors must be considered along with the dc resistance.

7.4 DIRECT BONDS.

Direct bonding is the establishment of the desired electrical path between the interconnected members without the use of an auxiliary conductor. Specific portions of the surface areas of the members are placed in direct contact. Electrical continuity is obtained by establishing a fused metal bridge across the junction by welding, brazing, or soldering or by maintaining a high pressure contact between the mating surfaces with bolts, rivets, or clamps. Examples of direct bonds are the splices between bus bar sections, the connections between lightning down conductors and the earth electrode subsystem, the mating of equipment front panels to equipment racks, and the mounting of connector shells to equipment panels.

Properly constructed direct bonds exhibit a low dc resistance and provide an rf impedance as low as the configuration of the bond members will permit. Direct bonding is always preferred; however, it can be used only when the two members can be connected together and can remain so without relative movement. The establishment of electrical continuity across joints, seams, hinges, or fixed objects that must be spatially separated requires indirect bonding with straps, jumpers, or other auxiliary conductors.

Current flow through two configurations of a direct bond is illustrated in Figure 7-2. The resistance, R_c, of the path through the conductors on either side of the bond is given by

$$R_c = \rho \frac{\ell}{A} \tag{7-1}$$

where ρ is the resistivity of the conductor materials, ℓ is the total path length of the current through conductors, and A is the cross-sectional area of the conductors (assumed equal). Any bond resistance at the junction will increase the total path resistance. Therefore, the objective in bonding is to reduce the bond resistance to a value negligible in comparison to the conductor resistance so that the total path resistance is primarily determined by the resistance of the conductors.

Metal flow processes such as welding, brazing, and silver soldering provide the lowest values of bond resistance. With such processes, the resistance of the joint is determined by the resistivity of the weld or filler metal which can approach that of the metals being joined. The bond members are raised to temperatures sufficient to form a continuous metal bridge across the junction.

For reasons of economy, future accessibility, or functional requirements, metal flow processes are not always the most appropriate bonding techniques. It may then be more appropriate to bring the mating surfaces together under high pressure. Auxiliary fasteners such as bolts, screws, rivets or clamps are employed to apply and maintain the pressure on the surfaces. The resistance of these bonds is determined by the kinds of metals involved, the surface conditions within the bond area, the contact pressure at the surfaces, and the cross-sectional area of the mating surfaces.

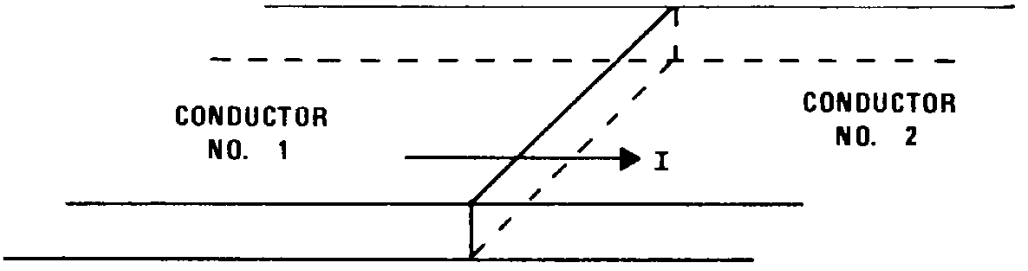

(a) BUTT JOINT

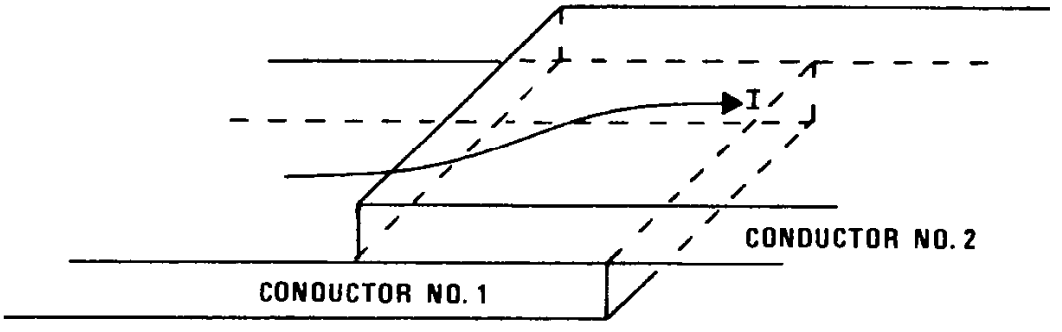

(b) LAP JOINT

Figure 7-2. Current Flow Through Direct Bonds

7.4.1 Contact Resistance.

No metallic surface is perfectly smooth. In fact, surfaces consist of many peaks and valleys. Even the smoothest commercial surfaces exhibit an RMS roughness of 0.5 to 1 millionth of an inch (7-2); the roughness of most electrical bonding surfaces will be several orders of magnitude greater. When two such surfaces are placed in contact, they touch only at the tips of the peaks - so called asperities. Thus the actual area of contact for current flow is much smaller than the apparent area of metallic contact.

An exaggerated side view of the actual contact surfaces at a bond interface is shown in Figure 7-3. Theoretically, two infinitely hard surfaces would touch at only three asperities. Typically, however, under pressure elastic deformation and plasticity allows other asperities to come into contact. Current passes between the surfaces only at those points where the asperities have been crushed and deformed (7-3) to establish true metal contact. The actual area of electrical contact is equal to the sum of the individual areas of contacting asperities. This actual area of contact can be as little as one millionth of the apparent (gross surface) contact area (7-4).

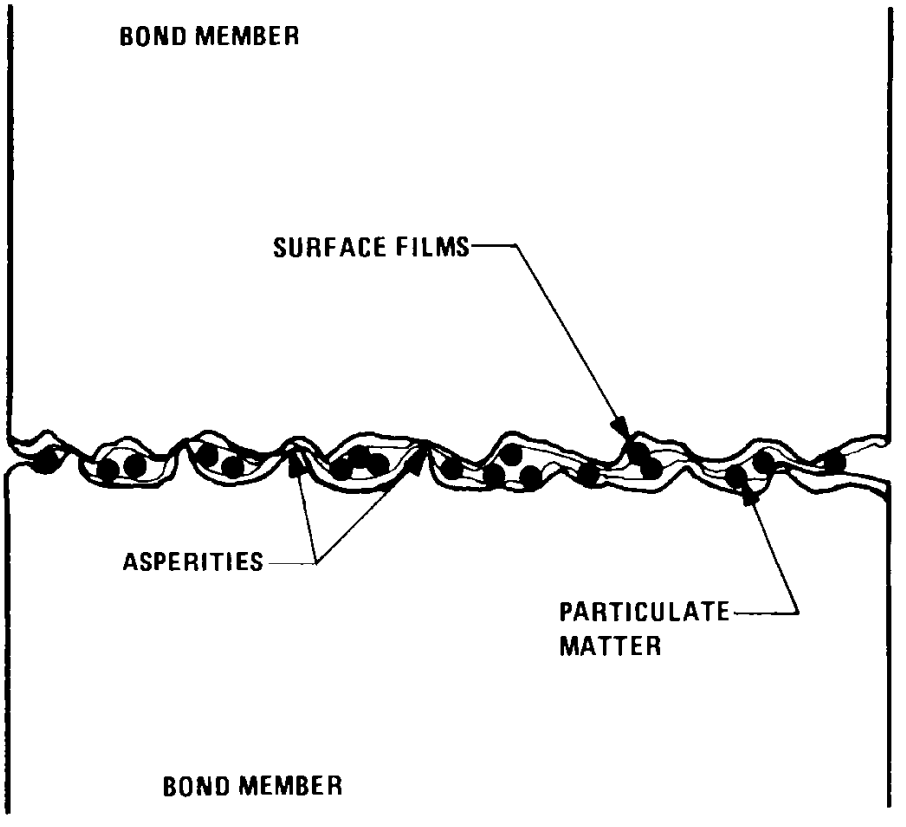

Figure 7-3. Nature of Contact Between Bond Members

7.4.1.1 Surface Contaminants.

Surface films will be present on practically every bond surface. The more active metals such as iron and aluminum readily oxidize to form surface films while the noble metals such as gold, silver, and nickel are less affected by oxide films. Of all metals, gold is the least affected by oxide films. Although silver does not oxidize severely, silver sulfide forms readily in the presence of sulfur compounds.

If the surface films are much softer than the contact material, they can be squeezed from between the asperities to establish a quasi-metallic contact. Harder films, however, may support all or part of the applied load, thus reducing or eliminating the conductive contact area. If such films are present on the bond surfaces, they must be removed through some thermal, mechanical, or chemical means before joining the bond members. Even when metal flow processes are used in bonding, these surface films must be removed or penetrated to permit a homogeneous metal path to be established.

Foreign particulate matter on the bond surfaces will further impair bonding. Dirt and other solid matter such as high resistance metal particles or residue from abrasives can act as stops to prevent metallic contact. Therefore, all such materials must be thoroughly removed from the surfaces prior to joining the bond members.

7.4.1.2 Surface Hardness. The hardness of the bond surfaces also affects the contact resistance. Under a given load, the asperities of softer metals will undergo greater plastic deformation and establish greater metallic contact. Likewise, at a junction between a soft and a hard material, the softer material will tend to conform to the surface contours of the harder material and will provide a lower resistance contact than would be afforded by two hard materials. Table 7-1 shows how the resistance of 6.45 square cm (1 square inch) bonds varies with the type of metals being joined.

7.4.1.3 Contact Pressure. The influence of mechanical load on bond resistance is illustrated by Figure 7-4. This figure shows the resistance variation of a 6.45 square cm (1 square inch) bond held in place with a 1/4-20 steel bolt as a function of the torque applied to the bolt. The resistance variation for brass is lowest clue to its relative softness and the absence of insulating oxide films. Even though aluminum is relatively soft, the insulating properties of aluminum oxide cause the bond resistance to be highly dependent upon fastener torque up to approximately 40 in. -lb torque (which corresponds to a contact pressure of about 1200 psi). Steel, being harder and also susceptible to oxide formations, exhibits a resistance that is dependent upon load below 80 in.-lb or about 1500 psi (for mild steel). Above these pressures, no significant improvement in contact resistance can be expected.

Table 7-1

DC Resistance of Direct Bonds Between Selected Metals

Bond Composition	Resistance (Micro+ohms)
Brass-Brass	6
Aluminum-Aluminum	25
Brass-Aluminum	50
Brass-Steel	150
Aluminum-Steel	300
Steel-Steel	1500

Notes: Apparent Bond Area: 1 in.^{2} (6.45 cm^2)
Fastener Torque: 100 in -lb

Source: Adapted from Reference (7-5)

7.4.1.4 Bond Area.

Smaller bond areas with the same loadings would produce higher contact pressure which would decrease the resistance. However, as shown in Figure 7-4, an increase in pressure over 1500 psi for steel and 1200 psi for aluminum produces relatively slight changes in bond resistance. Further, the improvement in resistance due to increased pressure is offset by the smaller overall bond area. In a similar fashion, a larger bond area (with no change in fastener size) under the same torque results in a lowered pressure at the bond surfaces. The reduced pressure would be counterbalanced to some extent by the increased bond area, but the net effect can be expected to be an increase in bond resistance. Thus, when larger bond areas are used, larger bolts at correspondingly higher torques should be used for fastening. (See Para 7.4.2.4)

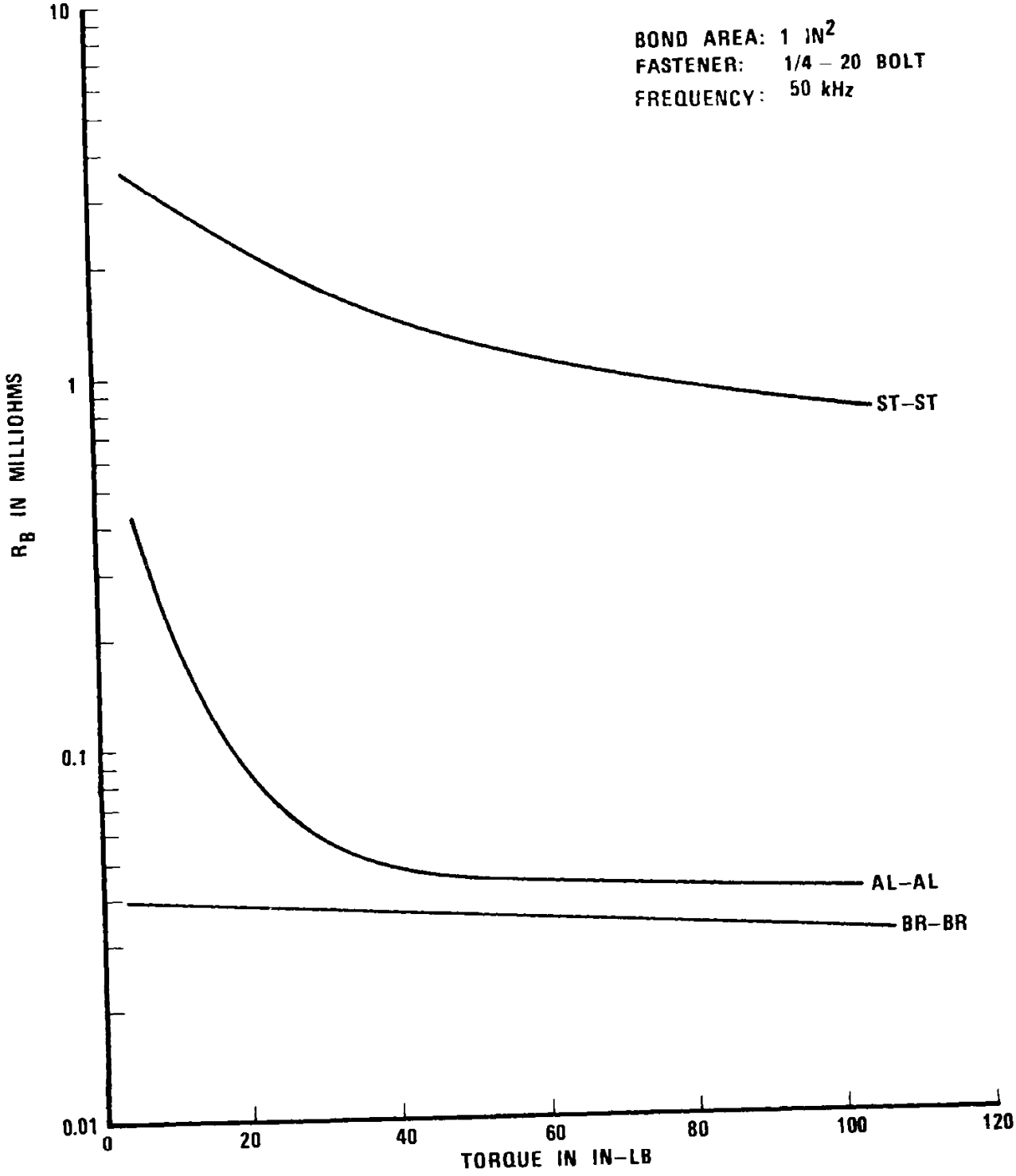

Figure 7-4. Resistance of a Test Bond as a Function of Fastener Torque (7-5)

Bond mating surfaces with areas as large as practical are desirable for several reasons. Large surface areas maximize the cross-sectional area of the path for current and correspondingly maximizes the total number of true metallic contacts between the surfaces. In addition to the obvious advantage of decreased bond resistance, the current crowding which can occur during power fault conditions or under a severe lightning discharge is lessened. Such current crowding produces a higher effective bond resistance than is present during low current flow. The increased bond resistance raises the voltage drop across the junction to even higher values and adds to the heat generated at the junction by the heavy current flow. Large bond areas not only lessen the factors which contribute to heat generation, they also distribute the heat over a larger metallic area which facilitates its removal. A further advantage of a large bond is that it will probably provide greater mechanical strength and will be less susceptible to long term erosion by corrosive products because only a small portion of the total bond area is exposed to the environment.

7.4.2 Direct Bonding Techniques.

Direct bonds may be either permanent or semi-permanent in nature. Permanent bonds may be defined as those intended to remain in place for the expected life of the installation and not required to be disassembled for inspection, maintenance, or system modifications. Joints which are inaccessible by virtue of their location should be permanently bonded and appropriate steps taken to protect the bond against deterioration.

Many bonded junctions must retain the capability of being disconnected without destroying or significantly altering the bonded members. Junctions which should not be permanently bonded include those which may be broken for system modifications, for network noise measurements, for resistance measurements, and for other related reasons. In addition, many joints cannot be permanently bonded for cost reasons. All such connections not permanently joined are defined as semipermanent bonds. Semipermanent bonds include those which utilized bolts, screws, rivets, clamps and other auxiliary devices for fasteners.

7.4.2.1 Welding.

In terms of electrical performance, welding is the ideal method of bonding. The intense heat (in excess of 4000° F) involved is sufficient to boil away contaminating films and foreign substances. A continuous metallic bridge is formed across the joint: the conductivity of this bridge typically approximates that of the bond members. The net resistance of the bond is essentially zero because the bridge is very short relative to the length of the bond members. The mechanical strengh of the bond is high: the strength of a welded bond can approach or exceed the strength of the bond members themselves. Since no moisture or contaminants can penetrate the weld, bond corrosion is minimized. The erosion rate of the metallic bridge should be comparable to that of the base members; therefore, the lifetime of the bond should be as great as that of the bond members.

Welds should be utilized whenever practical for permanently joined bonds. Although welding may be a more expensive method of bonding, the reliability of the joint makes it very attractive for bonds which will be inaccessible once construction is completed. Most metals which will be encountered in normal construction can be welded with one of the standard welding techniques such as gas, electric are, Heliare and exothermic.

Conventional welding should be performed only by appropriately trained and qualified personnel. Consequently, increased labor costs can be expected. In many instances, also, the welding of bonds can be much slower than the installation of fasteners such as bolts or rivets. In such cases, the added costs of welding may force the use of alternate bonding techniques.

An effective welding technique for many bonding applications is the exothermic process. In this process, a mixture of aluminum, copper oxide, and other powders is held in place around the joint with a graphite mold. The mixture is ignited and the bent generated (in excess of 4000° F) reduces the copper oxide to provide a homogeneous copper blanket around the junction. Because of the high temperatures involved, copper materials can be bonded to steel or iron as well as to other copper materials.

Two examples of exothermic bonds are shown in Figure 7-5. The top photograph shows a 4/0 copper clad cable bonded to a steel plate. The bottom photograph shows two 4/0 copper clad cables axially bonded together. The tight mechanical bond established by this process is evident from these photographs. Figure 7-6 shows examples of the various bond configurations for which molds are readily available.

This process is advantageous for welding cables together, for welding cables to rods, or for welding cables to I-beams and other structural members. It is particularly attractive for the bonding of interconnecting cables to ground rods where the use of conventional welding techniques might be awkward or where experienced welders are not available. Because of the cost of the molds (a separate mold is necessary for each different bond configuration), this process is most economical when there are several bonds of the same configuration to be made.

When using this process. the manufacturer's directions should be followed closely. The mold should be dried or baked out as specified, particularly when the mold has not been used for several hours and may have absorbed moisture. The metals to be bonded should be cleaned of dirt and debris and should have the excess water dried off. Water, dirt and other foreign materials cause voids in the weld which may weaken it or may prevent a low resistance joint from being achieved. A further requirement is that the mold size must match the cable or conductor cross sections; otherwise, the molten metal will not be confined to the bond region.

7.4.2.2 Brazing.

Brazing to include silver soldering is another metal flow process for permanent bonding. In brazing, the bond surfaces are heated to a temperature above 800° F but below the melting point of the bond members. A filler metal with an appropriate flux is applied to the heated members which wets the bond surfaces to provide intimate contact between the brazing solder and the bond surfaces. As with higher temperature welds, the resistance of the brazed joint is essentially zero. However, since brazing frequently involves the use of metal different from the primary bond members, additional precautions must be taken to protect the bond from deterioration through corrosion.

Figure 7-5. Typical Exothermic Connections

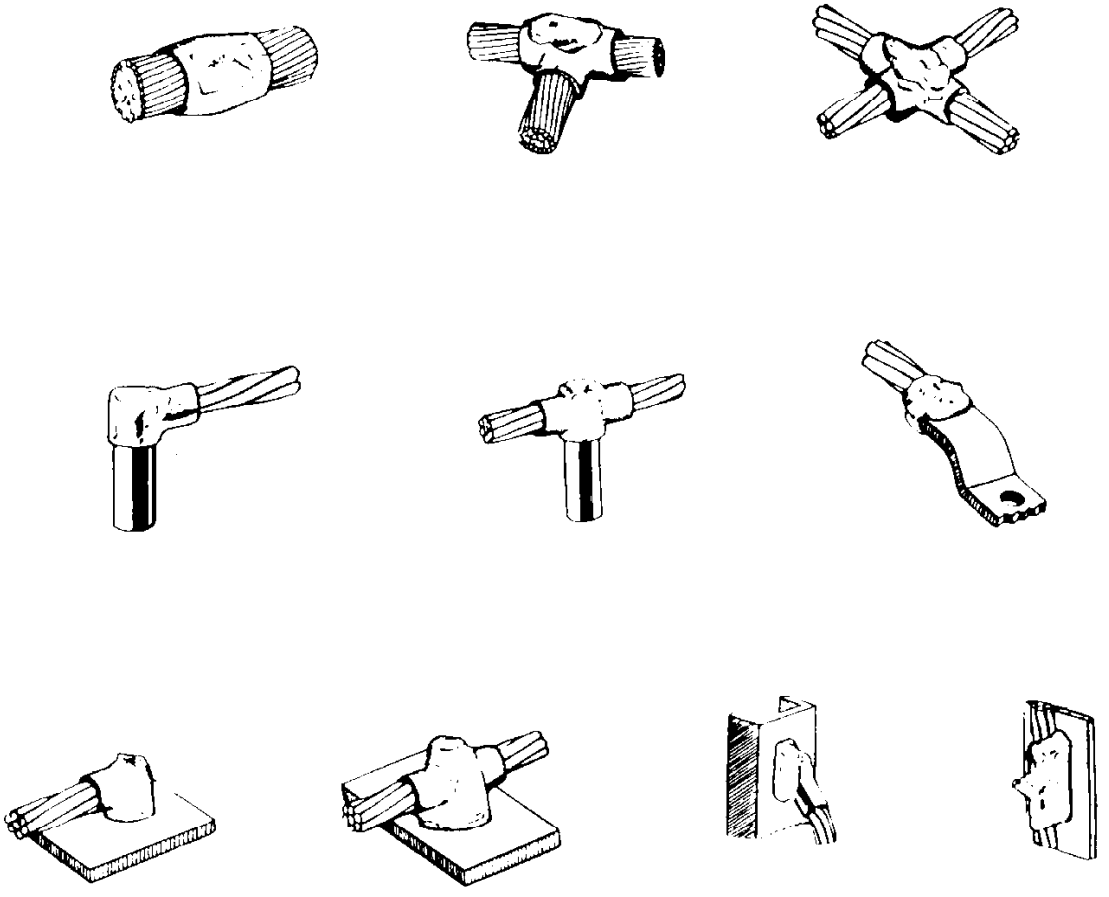

COURTESY OF ERICO PRODUCTS, INC., CLEVELAND, OHIO

Figure 7-6. Typical Bond Configurations Which Can Be Implemented With The Exothermic Process

7.4.2.3 Soft Solder.

Soft soldering is an attractive metal flow bonding process because of the ease with which it can be applied. Relatively low temperatures are involved and it can be readily employed with several of the high conductivity metals such as copper, tin and cadmium. With appropriate fluxes, aluminum and other metals can be soldered. Properly applied to compatible materials, the bond provided by solder is nearly as low in resistance as one formed by welding or brazing. Because of its low melting point, however, soft solder should not be used as the primary bonding material where high currents may be present. For this reason, soldered connections are not permitted by MIL-STD-188-124A or the National Electrical Code in grounding circuits for fault protection. Similarly, soft solder is not permitted for interconnections between elements of lightning protection networks by either the Military Standard, the National Fire Protection Association's Lightning Protection Code or the Underwriter's Master Labeled System. In addition to its temperature limitation, soft solder exhibits low mechanical strength and tends to crystallize if the bond members move while the solder is cooling. Therefore, soft solder should not be used if the joint must withstand mechanical loading. The tendency toward crystallization must also be recognized and proper precautions observed when applying soft solder.

Soft solder can be used effectively in a number of ways, however. For example, it can be used to tin surfaces prior to assembly to assist in corrosion control. Soft solder can be used effectively for the bonding of seams in shields and for the joining of circuit components together and to the signal reference subsystem associated with the circuit. Soft solder is often combined with mechanical fasteners in sweated joints. By heating the joint hot enough to melt the solder, a low resistance filler metal is provided which augments the path established by the other fasteners; in addition, the solder provides a barrier to keep moisture and contaminants from reaching the mating surfaces.

7.4.2.4 Bolts.

In many applications, permanent bonds are not desired. For example, equipments must be removed from enclosures or moved to other locations which require that ground leads and other connections must be broken. Often, equipment covers must be removable to facilitate adjustments and repairs. Under such circumstances, a permanently joined connection could be highly inconvenient to break and would limit the operational flexibility of the system. Besides offering greater flexibility, less permanent bonds may be easier to implement, require less operator training, and require less specialized tools.

The most common semipermanent bond is the bolted connection (or one held in place with machine screws, lag bolts, or other threaded fasteners) because this type bond provides the flexibility and accessibility that is frequently required. The bolt (or screw) should serve only as a fastener to provide the necessary force to maintain the 1200-1500 psi pressure required between the contact surfaces for satisfactory bonding. Except for the fact that metals are generally necessary to provide tensile strength, the fastener does not have to be conductive. Although the bolt or screw threads may provide an auxiliary current path through the bond, the primary current path should be established across the metallic interface. Because of the poor reliability of screw thread bonds, self-tapping screws are never to be used for bonding purposes. Likewise, Tinnernman nuts, because of their tendency to vibrate loose, should not be used for securing screws or bolts intended to perform a bonding function.

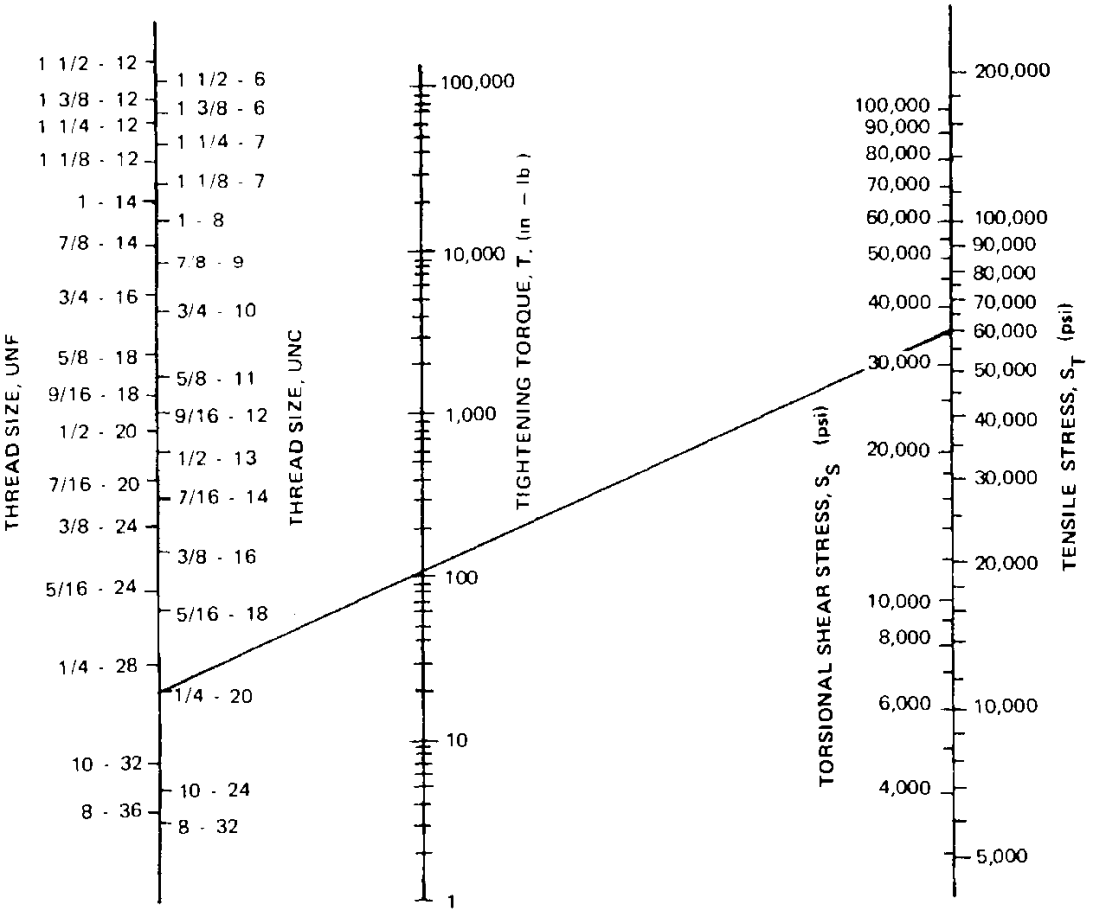

Figure 7-7. Nomograph for Torque on Bolts (7-6)

The size, number and spacing of the fasteners should be sufficient to establish the required bonding pressure over the entire joint area. The pressure exerted by a bolt is concentrated in the immediate vicinity of the bolt head. However, large, stiff washers can be placed under the bolt head to increase the effective contact area. Because the load is distributed over a larger area, the tensile load on the bolt should be raised by increasing the torque. The nomograph of Figure 7-7 may be used to calculate the necessary torque for the size bolts to be used. Where the area of the mating surfaces is so large that unreasonably high bolt torques are required, more than one bolt should be used. For very large mating areas, rigid backing plates should be used to distribute the force of the bolts over the entire area.

7.4.2.5 Rivets.

Riveted bonds are less desirable than bolted connections or joints bridged by metal flow processes. Rivets lack the flexibility of bolts without offering the degree of protection against corrosion of the bond surface that is achieved by welding, brazing or soldering. The chief advantage of rivets is that they can be rapidly and uniformly installed with automatic tools.

The bonding path established by a rivet is illustrated in Figure 7-8. The current path through a rivet is theorized to be through the interface between the bond members and the rivet body. This theory is justified by experience which shows that the fit between the rivet and the bond members is more important than the state of the mating surfaces between the bond members. Therefore, the hole for the rivet must be a size that provides a close fit to the rivet after installation. The sides of the hole through the bond members must be free of paint, corrosion products, or other non-conducting material.

For riveted joints in shields, the maximum spacing between rivets is recommended to be approximately 2 cm (3/4 inch) or less (7-7). In relatively thin sheet metal, rivets can cause bowing of the stock between the rivets as shown by Figure 7-9. In the bowed or warped regions, metal-to-metal contact may be slight or nonexistent. These open regions allow rf energy to leak through and can be a major cause of poor rf shield performance. By spacing the rivets close together, warping and bowing are minimized. For maximum rf shielding, the seam should be gasketed with some form of wire mesh or conductive epoxy to supplement the bond path of the rivets.

7.4.2.6 Conductive Adhesive. Conductive adhesive is a silver-filled, two-component, thermosetting epoxy resin which when cured produces an electrically conductive material. It can be used between mating surfaces to provide low resistance bonds. It offers the advantage of providing a direct bond without the application of heat as is required by metal flow processes. In many locations, the heat necessary for metal flow bonding may pose a fire or explosion threat. When used in conjunction with bolts, conductive adhesive provides an effective metal-like bridge with high corrosion resistance along with high mechanical strength. In its cured state, the resistance of the adhesive may increase through time. It also tends to adhere tightly to the mating surfaces and thus an epoxy-bolt bond is less convenient to disassemble than a simple bolted bond. In some applications, the advantages of conductive adhesive may outweigh this inconvenience.

7.4.2.7 Comparison of Techniques. Table 7-2 shows comparative ratings of the most commonly used bonding methods. In this table a rating from zero to 10 is assigned to each method for each performance parameter. A rating of 10 means that the method is suitable from the standpoint of the specific parameter listed in the extreme left hand column of the table. Lower ratings mean that the method is less suitable. A zero rating implies the method is a poor choice, while the dash means it does not apply. One-hundred percent consistency in ratings is impossible because any given method may vary widely in workmanship. A low-rated method expertly performed, will work better than a high-rated poorly performed method. When using the table assume that all methods are equally well implemented.

7.5 INDIRECT BONDS. The preferred method of bonding is to connect the objects together with no intervening conductor. Unfortunately, operational requirements or equipment locations often preclude direct bonding. When physical separation is necessary between the elements of an equipment complex or between the complex and its reference plane, auxiliary conductors must be incorporated as bonding straps or jumpers. Such straps are commonly used for the bonding of shock mounted equipment to the structural ground reference. They are also used for by-passing structural elements, such as the hinges on distribution box covers or on equipment covers, to eliminate the wideband noise generated by these elements when illuminated by intense radiated fields or when carrying high level currents. Bond straps or cables are also used to prevent static charge buildup and to connect metal objects to lightning down conductors to prevent flashover.

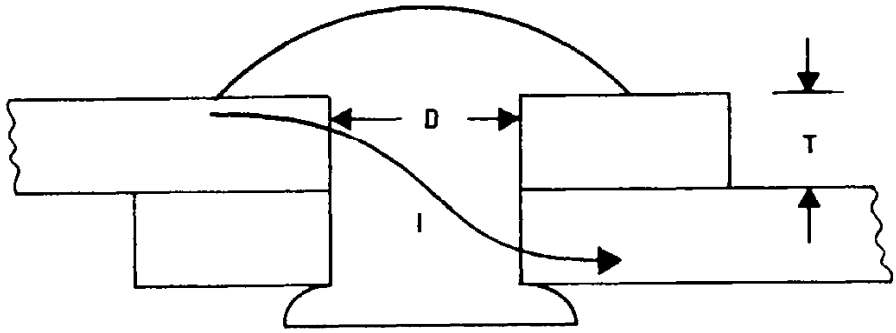

D = RIVET DIAMETER
T = THICKNESS OF BOND MEMBER
I = INDICATES CURRENT PATH THROUGH RIVETED BOND

Figure 7-8. Bonding Path Established by Rivets

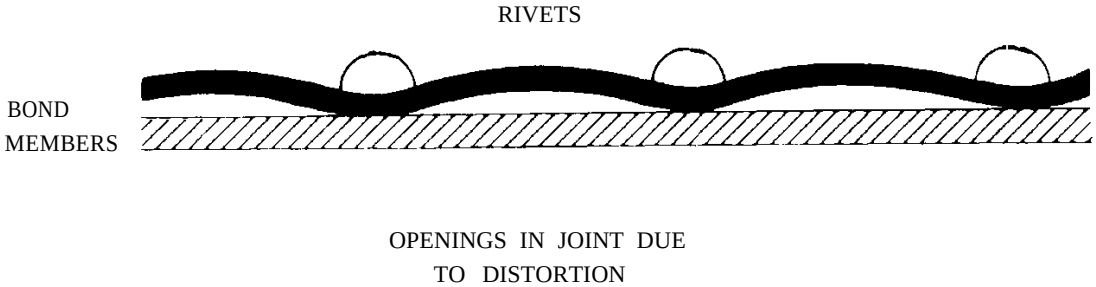

Figure 7-9. An Improperly Riveted Seam

Table 7-2

Ratings of Selected Bonding Techniques*

		Thermal					Chemical	Mechanical							
												Screws			
		Solder	Braze	Gas or Arc Weld	Exo-thermic Weld	Spot Weld	Con-ductive Adhesive	Bolts	Crimp	Rivets	Clamps	Wire	Terminal	Twisted Wires	Wire Nuts
Electrical Properties	Low Resistance	9	10	10	10	10	3	9	9	9	8	9	9	9	9
	Resistance Stability	10	10	10	10	10	7	8	9	9	5	7	9	5	8
	Voltage Drop	9	10	10	10	10	5	9	9	10	8	8	9	5	8
	Current Capacity	5	10	10	10	9	1	9	9	9	8	9	9	8	9
Mechanical Properties	Pulloff Force	8	10	10	10	10	1	9	9	9	9	3	10	2	8
	Low Creep	9	10	10	10	10	5	9	9	9	8	3	8	2	8
	Strength	6	10	10	10	7	4	9	9	10	8	5	9	4	8
Conductor Applica-bility	Solid Wire	10	10	10	10	10	10	10	10	5	9	10	-	9	10
	Stranded Wire	9	9	8	9	0	9	9	10	2	9	2	-	9	10
	Aluminum Wire	5	2	1	8	0	2	9	8	4	9	4	-	1	6
	Bus Bars and Structures	8	8	8	9	9	6	9	7	10	7	-	10	-	-
Environ-mental	High Temperature	3	9	10	10	10	1	8	9	4	5	7	8	5	7
	Low Temperature	9	10	10	10	10	5	8	9	5	5	8	8	7	7
	Thermal Shock	8	9	10	10	10	7	9	8	4	5	2	8	2	8
	Vibration	6	7	10	10	9	1	7	9	5	4	2	9	1	7
	Corrosive Atmosphere	9	10	10	10	10	5	6	9	8	3	7	9	4	8
	Aging	9	10	10	10	10	5	8	8	8	7	7	8	7	8
Cost Economy	Tooling	7	4	3	4	4	9	8	8	7	10	9	10	10	10
	Process	6	5	5	5	5	8	5	9	8	10	10	10	10	10
Accessi-bility in Assembly	Method Needs Little Space	8	5	4	5	8	8	8	9	8	9	9	9	10	8
	Ease of Repair	8	6	5	5	9	9	9	9	7	9	10	10	10	9

Source: Adapted from Reference [7-8]

7.5.1 Resistance. The resistance of an indirect bond is equal to the sum of the intrinsic resistance of the bonding conductor and the resistances of the metal-to-metal contacts at each end. The resistance of the strap is determined by the resistivity of the material used and the dimensions of the strap. With typical straps, the dc bond resistance is small. For example with a resistivity of 1.72 x 10^{-6} ohm-cm, (6.77 x 10^{-7} ohm-inches), a copper conductor 2.5 cm, (1 inch) wide, 40 roils thick, and 0.3 meters (1 foot) long has a resistance of 0.2 milliohms. To this resistance will be added the sum of the dc resistances of the direct bonds at the ends of the strap. With aluminum, copper, or brass straps, these resistances should be less than 0.1 milliohm with properly made connections. If long straps are required, however, the resistance of the conductor can be significant (see, for example Table 5-1).

7.5.2 Frequency Effects.

7.5.2.1 Skin Effect. Because high conductivity materials attenuate radio frequencies rapidly, high frequency currents do not penetrate into conductors very far, i.e., they tend to stay near the surface. At frequencies where this effect becomes significant the ac resistance of the bond strap can differ significantly from its dc value. For a detailed discussion of skin effect, see Section 5.2.2.1.

7.5,2.2 Bond Reactance.

The geometrical configuration of the bonding conductor and the physical relationship between objects being bonded introduce reactive components into the impedance of the bond. The strap itself exhibits an inductance that is related to its dimensions. For a straight, flat strap of nonmagnetic metal, the inductance in microhenries is given by

$$L = 0.002\ell \left(2.303 \log \frac{2\ell}{b+c} + 0.5 + 0.2235 \frac{b+c}{\ell}\right) \mu H \qquad (7\text{-}2)$$

or, for a wire of circular cross section, by

$$L = 0.002\ell \left(2.303 \log \frac{4\ell}{d} - 0.75\right) \mu H \qquad 7\text{-}3$$

where ℓ = length in cm,
b = width of the strap in cm
c = thickness of the strap in cm, and
d = diameter of the wire in cm.

Table 7-3 shows the calculated inductance, using Equation (7-2), of a nonmagnetic rectangular strap, 6 inches (15.2 cm) long. Table 7-4 compares the inductance of 6, 12, and 36 inch lengths of 0.05 inch (1.27 mm) thick straps while Table 7-5 tabulates the inductance of 6, 12, and 36 inch lengths of selected standard size cables from No. 14 AWG to 4/0 AWG. The inductive reactance of the straps tabulated in Tables 7-4 and 7-5 is plotted in Figure 7-10 for frequencies up to 100 MHz.

Table 7-3

Calculated Inductance of a 6 inch (15.2 cm) Rectangular Strap

Width, b (in.)	Thickness, c (in.)	L (μH)
0.5 (12.7 mm)	0.01 (0.25 mm)	0.112
0.5	0.05 (1.27 mm)	0.110
0.5	0.10 (2.54 mm)	0.107
1.0 (25.4 mm)	0.01	0.092
1.0	0.05	0.091
1.0	0.10	0.089
2.0 (50.8 mm)	0.01	0.072
2.0	0.05	0.071
2.0	0.10	0.071

Table 7-4

Calculated Inductance (μH) of 0.05 Inch (1.27 mm) Thick Straps

	Length		
Width (in.)	6 in. (15.2 cm)	12 in. (30.4 cm)	36 in. (91 cm)
0.5 (12.7 mm)	0.110	0.261	0.984
1.0 (25.4 mm)	0.091	0.222	0.866
2.0 (50.8 mm)	0.071	0.183	0.745

Table 7-5

Calculated Inductance (μH) of Standard Size Cable

	Length		
AWG NO.	6 in.	12 in.	36 in.
4/0	0.098	0.238	0.914
1/0	0.108	0.259	0.977
2	0.115	0.273	1.020
4	0.122	0.287	1.063
6	0.129	0.301	1.105
10	0.144	0.329	1.189
14	0.158	0.358	1.274

Even at relatively low frequencies, the reactance of the inductive component of the bond impedance becomes much larger than the resistance (7-5), (7-9). Thus, in the application of bonding straps, the inductive properties as well as the resistance of the strap must be considered.

The physical size of the bonding strap is important because of its effect on the rf impedance. As the length, ℓ, of the strap is increased its impedance increases nonlinearly for a given width; however, as the width, b, increases, there is a nonlinear decrease in strap impedance. Figure 7-11 shows that the relative reactance of a strap decreases significantly as the length to width (ℓ/b) ratio decreases. The curve shows that a strap with an ℓ/b ratio of 5 to 1 has an inductive reactance that is 45 percent that of a thin wire (i. e., very high ratio of ℓ to b); a 3 to 1 ratio decreases this percentage to 38 percent. Because of this reduction in reactance, bonding straps which are expected to provide a path for rf currents are frequently recommended to maintain a length-to-width ratio of 5 to 1 or less, with a ratio of 3 to 1 preferred.

In many applications, braided straps are preferred over solid straps because they offer greater flexibility. Figure 7-12 compares the measured impedance properties of a braided copper strap with those of a solid copper strap and shows that no significant difference exists between the impedance of the braided or solid strap for frequencies up to 10 MHz. Other tests (7-9) confirm that there is no essential difference in the rf impedance properties of braided and solid straps of the same dimensions and made of the same materials. Because the strands are exposed they are more susceptible to corrosion; braided straps may be undesirable for use in some locations for these reasons. Fine braided straps also are generally not recommended because of higher impedances at the higher frequencies as well as lower current carrying capacities.

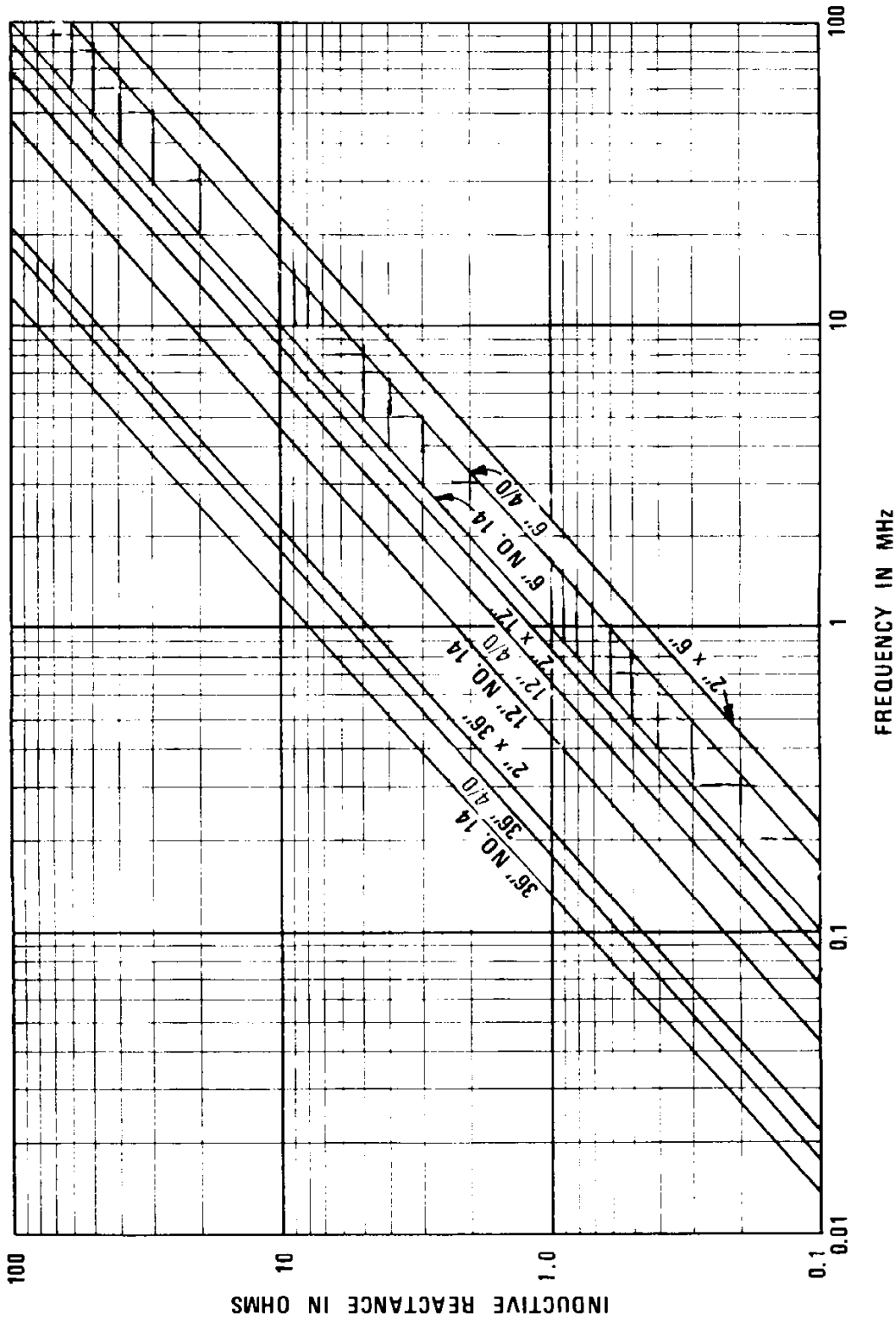

Figure 7-10. Inductive Reactance of Wire and Strap Bond Jumpers

7.5.2.3 Stray Capacitance.

A certain amount of stray capacitance is inherently present between the bonding jumper and the objects being bonded as well as between the bonded objects themselves. Figure 7-13 shows an equivalent circuit for the bonding strap alone. R_s represents the ac resistance of the strap; L_s is the inductance which may be calculated with either Equation 7-2 or 7-3; and C_s is the stray capacitance between the jumper and the two members being bonded. Except for extremely short straps, the magnitude of the inductive reactance of the strap will be significantly larger than the resistance and, at frequencies above approximately 100 kHz, the R_s term can be ignored. Thus, not considering R_s, the equation for the magnitude of impedance, Z_s, of the equivalent circuit is

$$\left| Z_s \right| = \frac{\omega L_s}{1-\omega^2 L_s C_s} \tag{7-4}$$

The equivalent circuit of Figure 7-13 does not take into account the effects of the equipment enclosure or other objects being bonded. Figure 7-14 shows the true equivalent circuit of an indirectly bonded system. The bonding strap parameters are again represented by R_s, C_s, L_s.

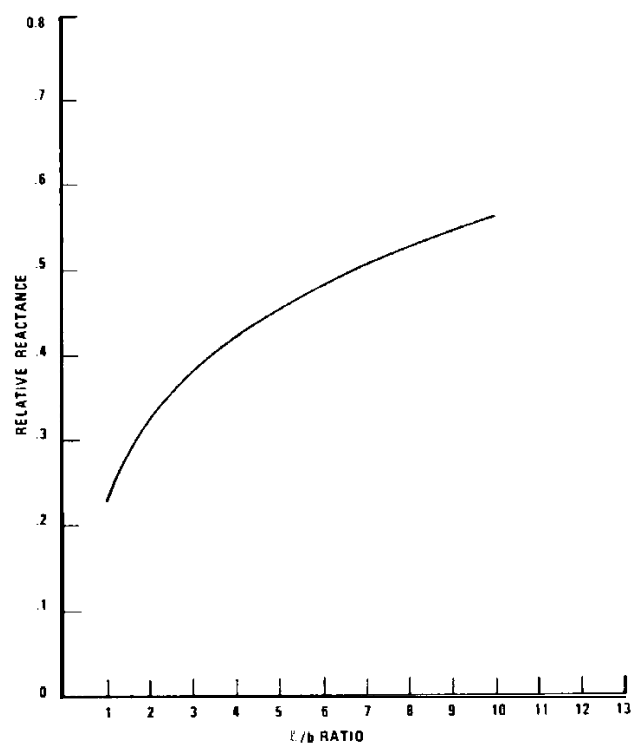

Figure 7-11. Relative Inductive Reactance versus Length-to-Width Ratio of Flat Straps (7-10)

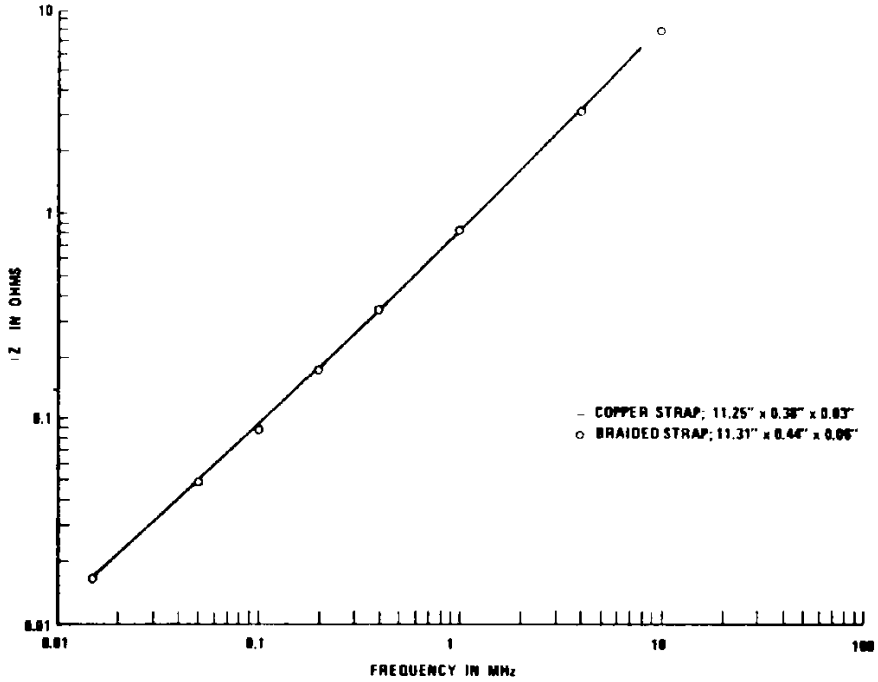

Figure 7-12. Frequency Variation of the Impedance of Simple Conductors (7-5)

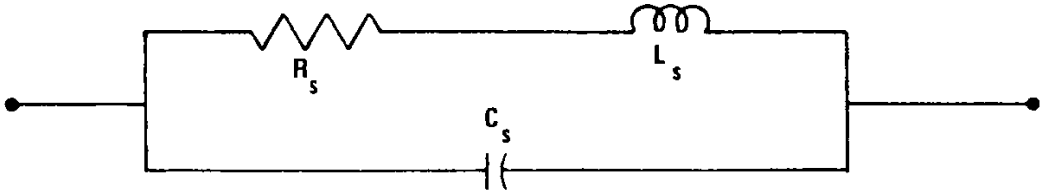

Figure 7-13. Equivalent Circuit for Bonding Strap

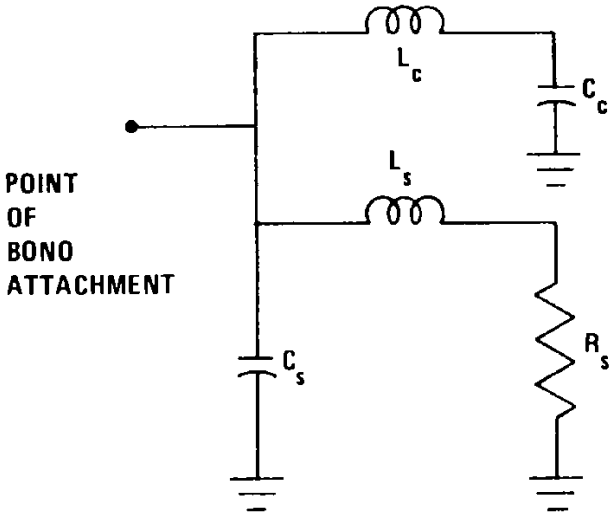

Figure 7-14. True Equivalent Circuit of a Bonded System

The inherent inductance of a bonded object e.g., an equipment rack or cabinet is represented by L_c and the capacitance between the bonded members, i.e., between the equipment and its reference plane, is represented by Cc. In most situations, $L_s >> L_c$, $C_c >> C_s$, and R_s can again be ignored. Thus, the primary (i. e., the lowest) resonant frequency is given by

$$f_r = \frac{1}{2\pi\sqrt{L_S C_c}} \tag{7-5}$$

These resonances can occur at surprisingly low frequencies -- as low as 10 to 15 MHz (7-5) in typical configurations. In the vicinity of these resonances, bonding path impedances of several hundred ohms are common. Because of such high impedances, the strap is not effective. In fact, in these high impedance regions, the bonded system may act as an effective antenna system which increases the pickup of the same signals which bond straps are intended to reduce. Figures 7-15 and 7-16 show the measured effectiveness of two different lengths of bonding straps in the reduction of the voltage induced by a radiated field on an equipment cabinet above a ground plane. The bond effectiveness indicates the amount of voltage reduction achieved by the addition of the bonding strap. Positive values of bonding effectiveness indicate a lowering of the induced voltage. At frequencies near the network resonances, the induced voltages are higher with the bonding straps than without the straps. Figures 7-15 and 7-16 show that:

a. at low frequencies where the reactance of the strap is low, bonding straps will provide effective bonding;

b. at frequencies where parallel resonances exist in the bonding network, straps may severely enhance the pickup of unwanted signals and

c. above the parallel resonant frequency, bonding straps do not contribute to the pickup of radiated signals either positively or negatively.

In conclusion, bonding straps should be designed and used with care with special note taken to ensure that unexpected interference conditions are not generated by the use of such straps.

7.6 SURFACE PREPARATION. To achieve an effective and reliable bond, the mating surfaces must be free of any foreign materials, e.g., dirt, filings, preservatives, etc., and nonconducting films such as paint, anodizing, and oxides and other metallic films. Various mechanical and chemical means can be used to remove the different substances which may be present on the bond surfaces. After cleaning, the bond should be assembled or joined as soon as possible to minimize recontamination of the surfaces. After completion of the joining process the bond region should be sealed with appropriate protective agents to prevent bond deterioration through corrosion of the mating surfaces.

7.6.1 Solid Materials.

Solid material such as dust, dirt, filings, lint, sawdust and packing materials impede metallic contact by providing mechanical stops between the surfaces. They can affect the reliability of the connection by fostering corrosion. Dust, dirt, and lint will absorb moisture and will tend to retain it on the surface. They may even promote the growth of molds, fungi, and bacteriological organisms which give off corrosive products. Filings of foreign metals can establish tiny electrolytic cells (see Section 7.8) which will greatly accelerate the deterioration of the surfaces.

The bond surface should be cleaned of all such solid materials. Mechanical means such as brushing or wiping are generally sufficient. Care should be exercised to see that all materials in grooves or crevices are removed. If a source of compressed air is available, air blasting is an effective technique for removing solid particles if they are dry enough to be dislodged.

7.6.2 Organic Compounds.

Paints, varnishes, lacquers, and other protective compounds along with oils, greases and other lubricants are nonconductive and in general, should be removed. Commercial paint removers can be used effectively. Lacquer thinner works well with oil-based paints, varnish, and lacquer. If chemical solvents cannot be used effectively, mechanical removal with scrapers, wire brushes, power sanders, sandpaper, or blasters should be employed. When using mechanical techniques, care should be exercised to avoid removing excess material from the surfaces. Final cleaning should be done with a fine, such as 400-grit, sandpaper or steel wool. After all of the organic material is removed, abrasive grit or steel wool filaments should be brushed or blown away. A final wipe down with denatured alcohol, dry cleaning fluid or lacquer thinner should be accomplished to remove any remaining oil or moisture films.

WARNING

Many paint solvents such as lacquer thinner and acetone are highly flammable and toxic in nature. They should never be used around open flames and adequate ventilation must be present. Inhalation of the fumes must be prevented.

Oils, greases, and other petroleum compounds should be wiped with a cloth or scraped off. Residual films should be dissolved away with an appropriate solvent. Hot soapy water can be used effectively for removing any remaining oil or grease. If water is used, however, the surfaces must be thoroughly dried before completing the bond. For small or intricate parts, vapor decreasing is an effective cleaning method. Parts to be cleaned are exposed to vapors of trichlorethylene, perchlorethylene, or methylene chloride until the surfaces reach the temperature of the vapor. In extreme cases, further cleaning by agitation in a bath of dry chromic acid, 2 lbs per gallon of water, and sulfuric acid, 4 oz per gallon of water, (7-7) may be necessary. The average dip time should be restricted to less than 30 seconds because prolonged submersion of parts in this bath may produce severe etching and cause loss of dimension. This bath must be followed by a thorough rinse with cold water and then a hot water rinse to facilitate drying.

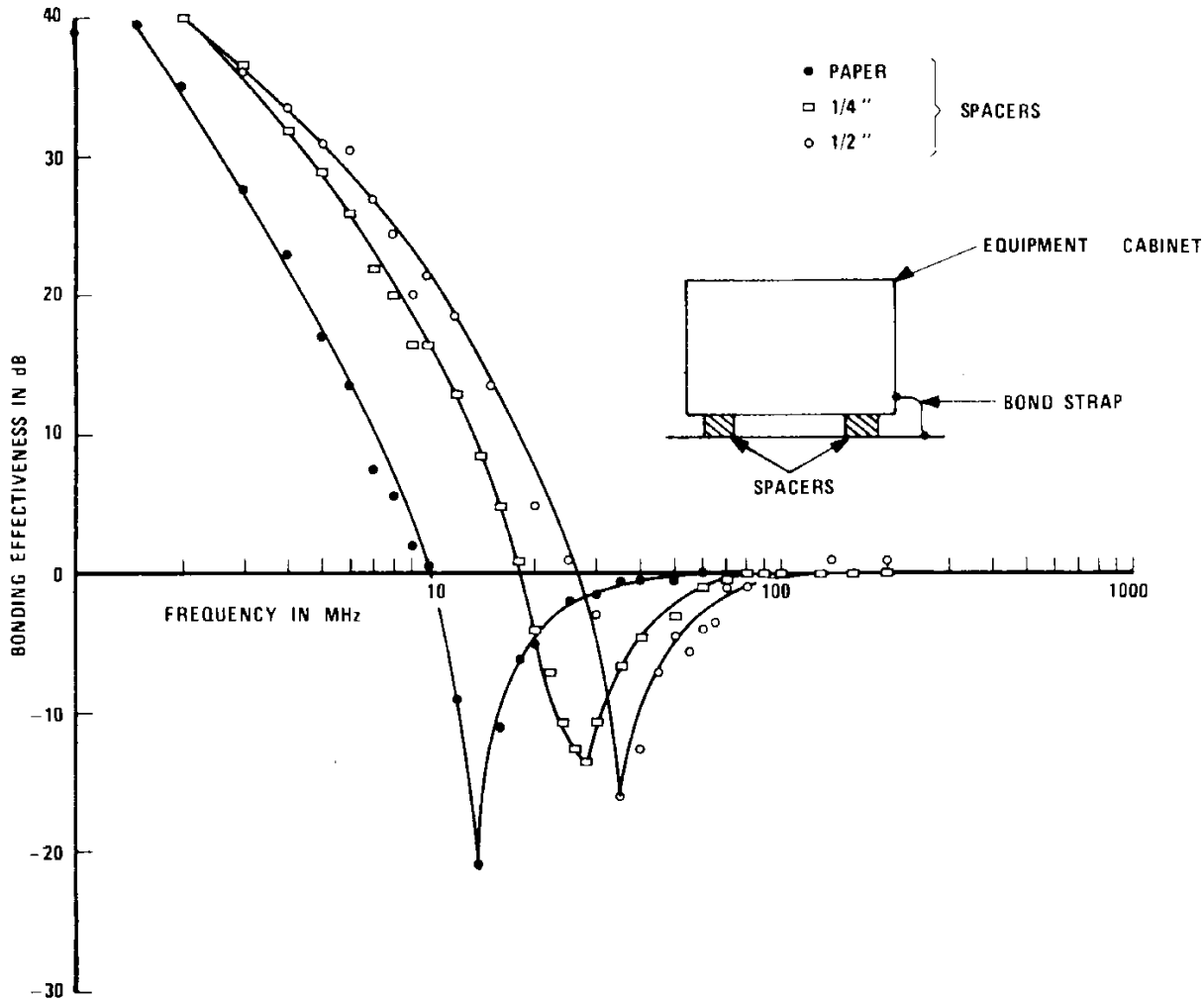

Figure 7-15. Measured Bonding Effectiveness of a 9-1/2 Inch Bonding Strap (7-5)

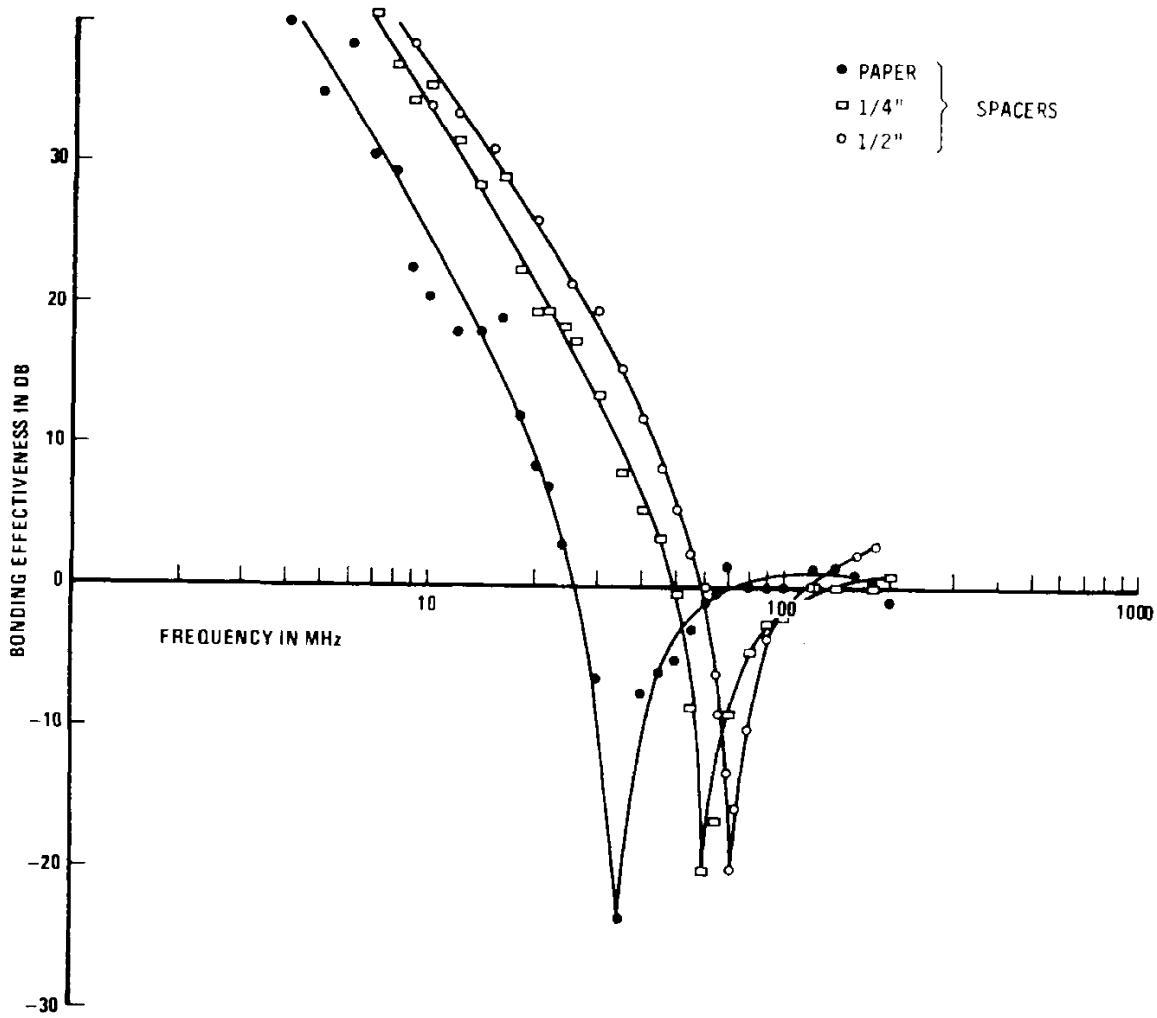

Figure 7-16. Measured Bonding Effectiveness of a 2-3/8 Inch Bonding Strap (7-5)

7.6.3 Platings and Inorganic Finishes.

Many metals are plated or coated with other metals or are treated to produce surface films to achieve improved wearability or provide corrosion resistance. Metal platings such as gold, silver, nickel, cadmium, tin, and rhodium should have all foreign solid materials removed by brushing or scraping and all organic materials removed with an appropriate solvent. Since such platings are usually very thin, acids and other strong etchants should not be used. Once the foreign substances are removed, the bond surfaces should be burnished to a bright shiny condition with fine steel wool or fine grit sandpaper. Care must be exercised to see that excessive metal is not removed. Finally, the surfaces should be wiped with a cloth dampened in a denatured alcohol or dry cleaning solvent and allowed to dry before completing the bond.

Chromate coatings such as iridite 14, iridite 18P, oadkite 36, and alodine 1000 offer low resistance as well as provide corrosion resistance. These coatings should not be removed. In general, any chromate coatings meeting the requirements of MIL-C-5541 (7-11) should be left in place.

Many aluminum products are anodized for appearance and corrosion resistance. Since these anodic films are excellent insulators, they must be removed prior to bonding. Those aluminum parts to be electrically bonded either should not be anodized or the anodic coating must be removed from the bond area.

7.6.4 Corrosion By-Products. Oxides, sulfides, sulfates, and other corrosion by-products must be removed because they restrict or prevent metallic contact. Soft products such as iron oxide and copper sulfate can be removed with a stiff wire brush, steel wool, or other abrasives. Removal down to a bright metal finish is generally adequate. When pitting has occurred, refinishing of the surface by grinding or milling may be necessary to achieve a smooth, even contact surface. Some sulfides are difficult to remove mechanically and chemical cleaning and polishing may be necessary. Oxides of aluminum are clear and thus the appearance of the surface cannot be relied upon as an indication of the need for cleaning. Although the oxides are hard, they are brittle and roughening of the surface with a file or coarse abrasive is an effective way to prepare aluminum surfaces for bonding.

7.7 COMPLETION OF THE BOND.

After cleaning of the mating surfaces, the bond members should be assembled or attached as soon as possible. Assembly should be completed within 30 minutes if at all possible. If more than 2 hours is required between cleaning and assembly, a temporary protective coating must be applied. Of course, this coating must also be removed before completing the bond.

The bond surfaces must be kept free of moisture before assembly and the completed bond must be sealed against the entrance of moisture into the mating region. Acceptable sealants are paint, silicone rubber, grease, and polysulfates. Where paint has been removed prior to bonding, the completed bond should be repainted to match the original finish. Excessively thinned paint should be avoided; otherwise, the paint may seep under the edges of the bonded components and impair the quality of the connection. Compression bonds between copper conductors or between compatible aluminum alloys located in readily accessible areas not subject to weather exposure, corrosive fumes, or excessive dust do not require sealing. This is subject to the approval of the responsible civil engineer or the local authorized approval representative.

7.8 BOND CORROSION. Corrosion is the deterioration of a substance (usually a metal) because of a reaction with its environment. Most environments are corrosive to some degree. Those containing salt sprays and industrial contaminants are particularly destructive. Bonds exposed to these and other environments must be protected to prevent deterioration of the bonding surfaces to the point where the required low resistance connection is destroyed.

7.8.1 Chemical Basis of Corrosion.

The basic diagram of the corrosion process for metals is shown in Figure 7-17. The requirements for this process to take place are that (1) an anode and a cathode must be present to form an electrochemical cell and (2) a complete path for the flow of direct current must exist. These conditions occur readily in many environments. On the surface of a single piece of metal anodic and cathodic regions are present because of impurities, grain boundaries and grain orientations, or localized stresses. These anodic and cathodic regions are in electrical contact through the body of metal. The presence of an electrolyte or conducting fluid completes the circuit and allows the current to flow from the anode to the cathode of the cell.

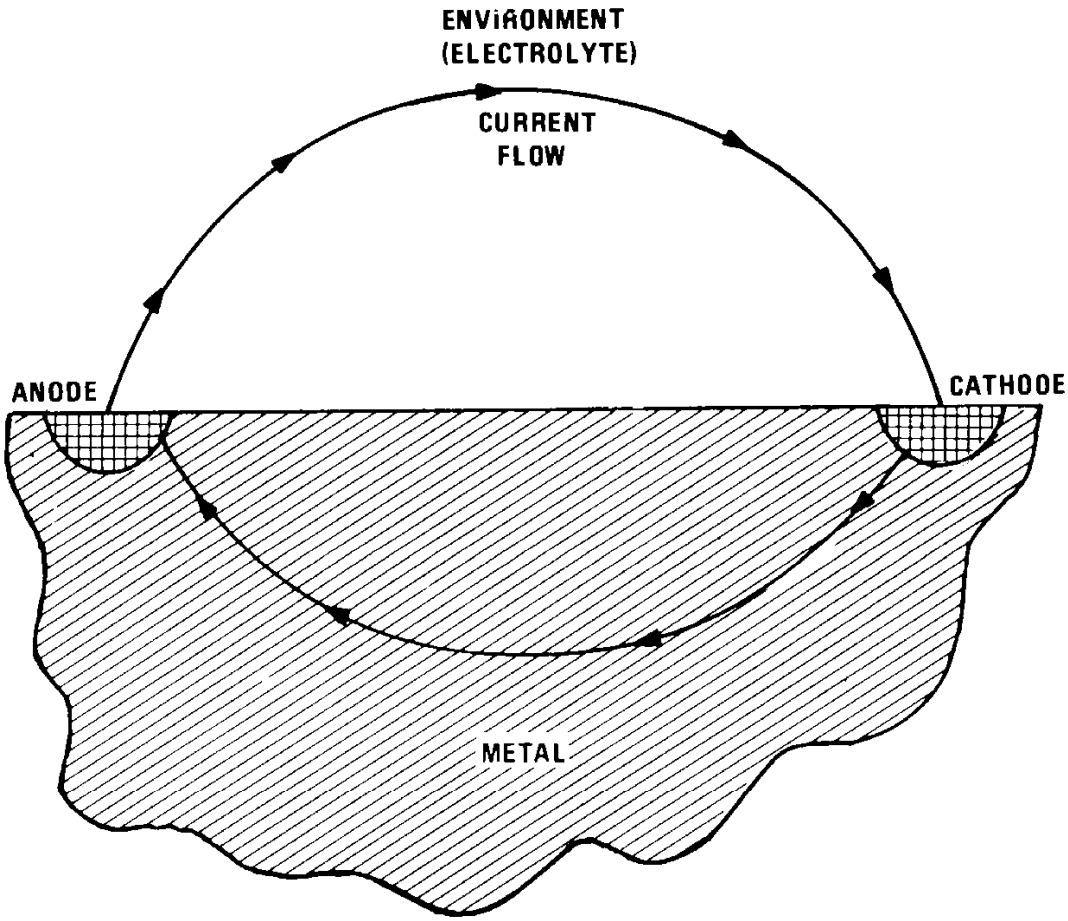

Figure 7-17. Basic Diagram of the Corrosion Process

Anything that prevents the existence of either of the above conditions will prevent corrosion. For example, in pure water, hydrogen gas will accumulate on the cathode to provide an insulating blanket to stop current flow. Most water, however, contains dissolved oxygen which combines with the hydrogen to form additional molecules of water. The removal of the hydrogen permits corrosion to proceed. This principle of insulation is employed in the use of paint as a corrosion preventive. Paint prevents moisture from reaching the metal and thus prevents the necessary electrolytic path from being established.

7.8.1.1 Electrochemical Series. The oxidation of metal involves the transfer of electrons from the metal to the oxidizing agent. In this process of oxidation, an electromotive force (EMF) is established between the metal and the solution containing the oxidizing agent. A metal in contact with an oxidizing solution containing its own metal ions establishes a fixed potential difference with respect to every other metal in the same condition. The set of potentials determined under a standardized set of conditions, including temperature and ion concentration in the solution, is known as the EMF (or electrochemical) series. The EMF series (with hydrogen as the referenced potential of 0 volts) for the more common metals is given in Table 7-6. The importance of the EMF series is that it shows the relative tendencies of metals to corrode. Metals high in the series react more readily and are thus more prone to corrosion. The series also indicates the magnitude of the potential established when two metals are coupled to form a cell. The farther apart the metals are in the series, the higher the voltage between them. The metal higher in the series will act as the anode and the one lower will act as the cathode. When the two metals are in contact, loss of metal at the anode will occur through oxidation to supply the electrons to support current flow. This type of corrosion is defined as galvanic corrosion. The greater the potential difference of the cell, i.e., the greater the dissimilarity of the metals the greater the rate of corrosion of the anode.

7.8.1.2 Galvanic Series.

The EMF series is based on metals in their pure state -- free of oxides and other films -- in contact with a standardized solution. Of greater interest in practice, however, is the relative ranking of metals in a typical environment with the effects of surface films included. This ranking is referred to as the galvanic series. The most commonly referenced galvanic series is listed in Table 7-7. This series is based on tests performed in sea water and should be used only as an indicator where other environments are of concern.

Galvanic corrosion in the atmosphere is dependent largely on the type and amount of moisture present. For example, corrosion will be more severe near the seashore and in polluted industrial environments than in dry rural settings. Condensate near the seashore or in industrial environments is more conductive even under equal humidity and temperature conditions due to increased concentration of sulfur and chlorine compounds, The higher conductivity means that the rate of corrosion is increased.

Table 7-6

Standard Electromotive Series (7-12)

Metal	Electrode Potential* (volts)
Magnesium	2.37
Aluminum	1.66
Zinc	0.763
Iron	0.440
Cadmium	0.403
Nickel	0.250
Tin	0.136
Lead	0.126
Copper	-0.337
Silver	-0.799
Palladium	-0.987
Gold	-1.50

NOTE: *Signs of potential are those employed by the American Chemical Society.

Table 7-7

Galvanic Series of Common Metals and Alloys in Seawater (7-13)

(ANODIC OR ACTIVE END)
Magnesium
Magnesium Alloys
Zinc
Galvanized Steel or Iron
1100 Aluminum
Cadmium
2024 Aluminum
Mid Steel or Wrought Iron
Cast Iron
Chromium Steel (active)
Ni-Resist (high-Ni cast iron)
18-8 Stainless Steel (active)
18-8 Mo Stainless Steel (active)
Lead-tin Solders
Lead
Tin
Nickel (active)
Inconel (active)
Hastelloy B
Manganese Bronze
Brasses
Aluminum Bronze
Copper
Silicon Bronze
Monel
Silver Solder
Nickel
Inconel
Chromium Steel
18-8 Stainless Steel
18-8 Mo Stainless Steel
Hastelloy C
Chlorimet 3
Silver
Titanium
Graphite
Gold
Platinum
(CATHODIC OR MOST NOBLE END)

7.8.2 Relative Area of Anodic Member. When joints between dissimilar metals are unavoidable, the anodic member of the pair should be the largest of the two. For a given current flow in a galvanic cell, the current density is greater for a small electrode than for a larger one. The greater the current density of the current leaving an anode, the greater is the rate of corrosion as illustrated by Figure 7-18. As an example, if a copper strap or cable is bonded to a steel column, the rate of corrosion of the steel will be low because of the large anodic area. On the other hand, a steel strap or bolt fastener in contact with a copper plate will corrode rapidly because of the relatively small area of the anode of the cell.

7.8.3 Protective Coatings. Paint or metallic platings used for the purpose of excluding moisture or to provide a third metal compatible with both bond members should be applied with caution. When they are used, both members must be covered as illustrated in Figure 7-19. Covering the anode alone must be avoided. If only tile anode is covered then at imperfections and breaks in the coating, corrosion will be severe because of the relatively small anode area. All such coatings must be maintained in good condition.

7.9 WORKMANSHIP.

Whichever bonding method is determined to be the best for a given situation, the mating surfaces must be cleaned of all foreign material and substances which would preclude the establishment of a low resistance connection. Next, the bond members must be carefully joined employing techniques appropriate to the specific method of bonding. Finally the joint must be finished with a protective coating to ensure continued integrity of the bond. The quality of the junction depends upon the thoroughness and care with which these three steps are performed. In other words, the effectiveness of the bond is influenced greatly by the skill and conscientiousness of the individual making the connection. Therefore, this individual must be aware of the importance of electrical bonds and must have the necessary expertise to correctly implement the method of bonding chosen for the job.

Those individuals charged with making bonds must be carefully trained in the techniques and procedures required. Where bonds are to be welded, for example, work should be performed only by qualified welders. No additional training should be necessary because standard welding techniques appropriate for construction purposes are generally sufficient for establishing electrical bonds. Qualified welders should also be used where brazed connections are to be made.

Exothermic welding can be effectively accomplished by personnel not specifically trained as welders. Every individual doing exothermic welding should become familiar with the procedural details and with the precautions required with these processes. Contact the manufacturers of the materials for such processes for assistance in their use. By taking reasonable care to see that the bond areas are clean and free of water and that the molds are dry and properly positioned, reliable low resistance connections can be readily achieved.

Pressure bonds utilizing bolts, screws, or clamps must be given special attention. Usual construction practices do not require the surface preparation and bolt tightening necessary for an effective and reliable electrical bond. Therefore, emphasis beyond what would be required for strictly mechanical strength is necessary. Bench of this type must be checked rigorously to see that the mating surfaces are carefully cleaned, that the bond members are properly joined, and that the completed bond is adequately protected against corrosion.

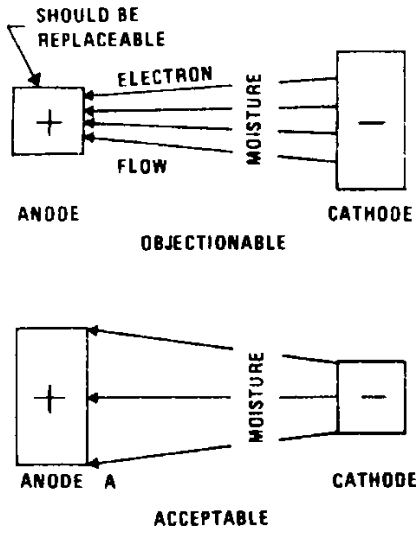

Figure 7-18. Anode-to-Cathode Size at Dissimilar Junctions

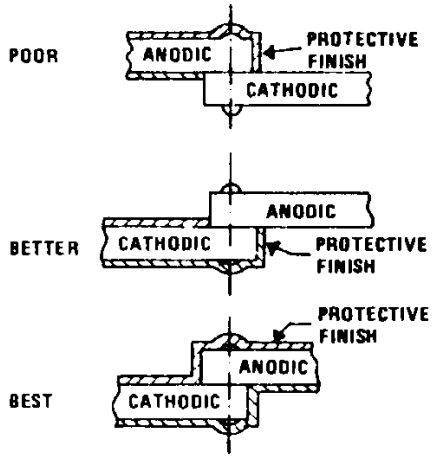

Figure 7-19. Techniques for Protecting Bonds Between Dissimilar Metals

7.10 SUMMARY OF GUIDELINES.

- Bonds must be designed into the system. Specific attention should be directed to the interconnections not only in power lines and signal lines, but also between conductors of signal ground bus networks, between equipments and the ground bus networks, between both cable and component or compartment shields and the ground reference plane, between structural members, and between elements of the lightning protection network. In the design and construction of a facility, signal path, personnel safety, and lightning protection bonding requirements must be considered along with mechanical and operational needs.

- Bonding must achieve and maintain intimate contact between metal surfaces. The surfaces must be smooth and clean and free of nonconductive finishes. Fasteners must exert sufficient pressure to hold the surfaces in contact in the presence of the deforming stresses, shocks, and vibrations associated with the equipment and its environment.

- The effectiveness of the bond depends upon its construction, the frequency and magnitude of the currents flowing through it, and the environmental conditions to which it is subjected.

- Bonding jumpers are only a substitute for direct bonds. If the jumpers are kept as short as possible, have a low resistance and low ℓ_j/w ratio, and are not higher in the electrochemical series than the bonded members, they can be considered a reasonable substitute.

- Bonds are always best made by joining similar metals. If this is not possible, special attention must be paid to the control of bond corrosion through the choice of the materials to be bonded, the selection of supplementary components (such as washers) to assure that corrosion will affect replaceable elements only, and the use of protective finishes,

- Protection of the bond from moisture and other corrosive elements must be provided.

- Finally, throughout the lifetime of the equipment, system, or facility, the bonds must be inspected, tested, and maintained to assure that they continue to perform as required.

7.11 REFERENCES.

7-1. R. Henkel and D. Mealey, "Electromagmetic Compatibility Operational Problems Aboard the Apollo Spacecraft Tracking Ship," 1967 IEEE Electromagnetic Compatibility Symposium Records, IEEE 27C80, July 1967, p 70.

7-2. D.D. Fuller, Theory and Practice of Lubrication for Engineers, Wiley, New York NY (1956).

7-3. J.C. Bailey, "Bolted Connections in Aluminum Bushbars," The Engineer, Vol 199, pp 551-554, April 22, 1955.

7-4. L. Jedynak, "Where the (Switch) Action Is," IEEE Spectrum, October 1973, pp 56-62.

7-5. H.W. Denny and W.B. Warren, "RF Bonding Impedance Study," RADC-TR-67-106, Contact AF30 (602)-3282, Engineering Experiment Station, Georgia Institute of Technology, Atlanta, Georgia, March 1967.

7-6. "Nomogram for Torque on Bolts," Design News, May 22, 1972.

7-7. "Electroinagnetic Compatibility," AFSC Design Handbook 1-4, Air Force Systems Command, 2 March 1984.

7-8 J.H. Whitley, "Which Permanent Electrical Connection Should You Use?" Electronics, January 25, 1963, pp 50-51.

7-9. R.W. Evans, "Metal-to-Metal Bonding for Transfer of Radio Frequency Energy," IN-R-ASTR-64-15, NASA Marshall Space Flight Center, Huntsville AL, June 25, 1964.

7-10. R.J. Troup and W.C. Grubbs, "A Special Research Paper on Electrical Properties of a Flat Thin Conductive Strap for Electrical Bonding," Proceedings of the Tenth Tri-Service Conference on Electromagnetic Compatibility, IITRI, Chicago IL, November 1964, pp 450-474.

7-11. "Chemical Conversion Coatings on Aluminum and Aluminum Alloys," MIL-C-5541C, 14 April 1981.

7-12. American Institute of Physics Handbook, Second Edition (1963).

7-13. G.D. Roessler, "Corrosion and the EMI/RFI Knitted Wire Mesh Gasket," Frequency Technology, Vol 7, No. 3, March 1969, pp 15-24.

CHAPTER 8

SHIELDING

8.1 FUNCTION OF AN ELECTROMAGNETIC SHIELD.

Groups of equipment or subsystems may be made electromagnetically compatible by any combination of three fundamental approaches: (1) the interfering signal source level may be reduced, (2) the receptor susceptibility may be reduced, or (3) the attenuation of the path or paths over which interference is transmitted from source to receptor may be increased. Radiated interference signals generated by electromagnetic fields may be attenuated effectively by electromagnetic shielding, either at the source or at the receptor. An electromagnetic (EM) shield reduces the strength of electric and/or magnetic fields on the side of the shield away from an interfering EM source. When a shield encloses an EM source, the field strength outside the shield will be reduced; when the shield is used to enclose a sensitive (susceptible) assembly located near an external EM source, the field strength inside the enclosure is substantially reduced. Shielding, when properly designed and implemented, offers significant wideband protection against EM radiation where source and receptor are not sufficiently separated for adequate free space radiation attenuation. It is relatively easy to obtain 40 dB of shielding effectiveness in a frequency range above 100 kHz with a single shield, and values as high as 70 dB are readily obtained with careful single-shield construction. For higher values of shielding effectiveness, double shields are normally used, yielding shielding values as high as 120 dB.

Radiated energy may still be coupled into a susceptible device through a shield of inadequate thickness, through holes provided for ventilation and other purposes, and through imperfectly joined shield sections. Precise calculation of shielding effectiveness, even for perfectly joined solid shields, depends on the form of the shield and the type field for which the shielding is to be used. Both electric and magnetic coupling can occur, but normally it is relatively easy to provide electric shielding. Magnetic shielding, however, is more difficult to provide, particularly at frequencies below 100 kHz. To avoid uncertainties in critical situations, tests should be performed to check shielding effectiveness. Such tests require the establishment of a known field and the measurement of insertion loss introduced by the shielding.

In the construction of a facility, the installation designer should take advantage of all the inherent shielding which the installation and its individual equipments and terrain have to offer. Items such as building walls, partitions, towers and other similar structures may be used to advantage. The shielding effectiveness afforded by these items can be used to isolate EM radiation generating equipment from potentially susceptible devices, personnel, flammable mixtures, and other items. In addition, equipments used in a console or rack may be placed to take advantage of the inherent shielding of that rack.

Shielding, although an important technique for reducing EM interference effects, is not the only technique available for this purpose. Application of shielding techniques should not be made without due regard to the roles which filtering, grounding, and bonding play in the interference suppression program.

8.2 BASIC SHIELDING THEORY.

The shielding effectiveness of an equipment or subassembly enclosure depends upon a number of parameters, the most notable of which are the frequency and impedance of the impinging wave, the intrinsic characteristics of the shield materials, and the numbers and shapes of shield discontinuities. The effectiveness of a shield is specified in terms of the reduction of EM field strength caused by the shield. The shielding effectiveness (SE) is defined as the ratio of the field strength without the shield present to the field strength with the shield in place. Because of the wide ranges in this ratio, it is common practice to express the shielding effectiveness in decibels

$$SE = 20 \log (E_1/E_2), \tag{8-1}$$

or

$$SE = 20 \log (H_1/H_2). \tag{8-2}$$

The variables E_1 and H_1 are the electric and magnetic field strengths without the shield present, and E_2 and H_2 are those with the shield in place.

8.2.1 Oppositely Induced Fields. A shielding action occurs whenever an electromagnetic wave encounters a metal surface. Part of the wave energy is reflected back toward the source, part is dissipated in the metal, and the remainder propagates beyond the metal. This shielding effect can be visualized as being the result of the incoming electric and magnetic fields inducing charges at the surface of the shield and a current flow within the shield, respectively. The induced charges and currents are of such a polarity and direction that their associated electric and magnetic fields oppose the incident fields, thus reducing the EM fields beyond the shield. Although this concept of the shielding theory does not lend itself to efficient calculation of the degree of shielding provided by a particular shield, it does provide a useful physical picture of shielding. For example, it can be seen from this viewpoint that shielding effectiveness would be reduced more if the shield were cut so as to interfere with the induced current flow than if it were cut along the line of current flow. Thus, if a plane EM wave is incident upon a conducting shield with a very long slit, more energy will be transmitted through the slit if the electric field vector is perpendicular to the slit than if it is parallel to the slit (see Figure 8-1). This is true because the EM boundary conditions (8-1) require that the induced shield current flow be perpendicular to the incoming magnetic field vector (and thus parallel to the electric field vector).

8.2.2 Transmission Line Analogy. The shielding theory most applicable to engineering calculations is based upon an analogy with transmission line theory. According to the planewave theory developed by Schelkunoff (8-1), an electromagnetic shield transmits EM waves whose fronts coincide with the shielding boundary configuration in a manner mathematically analogous to that in which a two-wire transmission line transmits electrical current and voltage. Consider an incident EM wave with a power of P_{in} watts/m^2 impinging upon a flat shield as in Figure 8-2. When the wave encounters the first surface of the shield, a portion (p_{r1}) of the

incident power is reflected back toward the source; the remainder (P_{t1}) penetrates the shield and begins to propagate through the shield. The ratio of reflected power to incident power (P_{r1}/P_{in}) depends upon the intrinsic impedance of the shield material and the wave impedance* of the incident wave in the same manner as at the junction of two transmission lines of different characteristic impedances. A portion of the power transmitted into the shield (P_{t2}) is converted into heat as the wave moves through the shield; this energy loss is referred to as absorption loss and is analogous to the dissipated energy within a lossy transmission line. Of the power which propagates through the shield to reach the second surface of the shield, a portion is reflected back into the shield and the remainder (P_{out}) is transmitted through the surface and beyond the shield. If the absorption loss within the shield is small (less than 10 dB), a significant part of the power reflected at the second surface (P_{r2}) propagates back to the first surface where a portion is reflected back into the shield, propagates back to-and-through the second surface, and contributes to the power propagated beyond the shield. Shielding effectiveness, then, depends upon three factors: (1) reflection loss, (2) absorption loss, and (3) a re-reflection factor which is significant when the absorption is small.

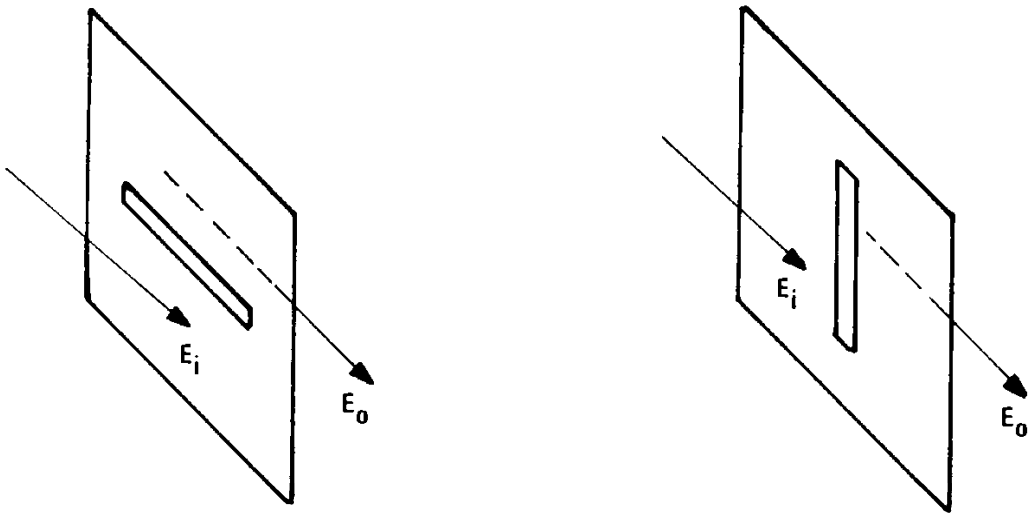

(A) (B)

Figure 8-1. Electromagnetic Transmission Through a Slot

*Wave impedance is defined as the ratio of the electric field strength to the magnetic field strength in the plane of interest. For further information, see Chapter 18 of Everett (8-2).

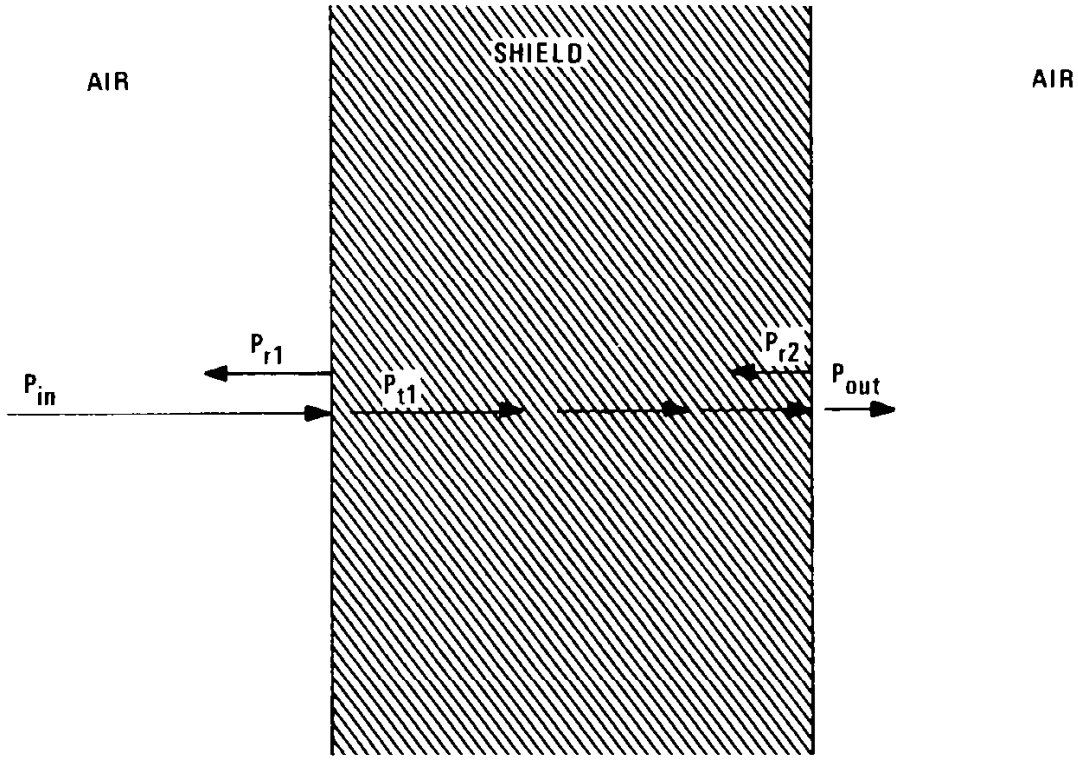

Figure 8-2. Transmission Line Model of Shielding

8.2.3 Nonuniform Shielding. Nonuniform shielding theory has been developed to deal with wave transmission through defects. It treats the defect as a transmission path in parallel with that representing transmission through the shielding material itself. The net shielding effectiveness of any practical enclosure is calculated as the result of all such parallel transmission paths, carefully considering transmission phase differences. The equipment design process, regardless of the theory utilized, consists of establishing undesired signal levels on one side of the proposed shielding barrier, estimating tolerable signal levels on the other side, and trading off shield design options to achieve the necessary effectiveness level.

8.3 SHIELDING EFFECTIVENESS OF CONTINUOUS SINGLE-THICKNESS SHIELDS.

The plane wave theory (or transmission line theory) of shielding is the basis of the most commonly used shielding design data. The resulting set of design equations, graphs, tables, and nomography is based upon the separation of the shielding effectiveness into three additive terms: absorption loss, reflection loss, and a correction term to account for re-reflections within the shield.

The shield effectiveness (in decibels) of a large, plane sheet of metal with an EM wave arriving along a path perpendicular to the sheet has been shown (8--2) to be:

$$SE = \underbrace{20 \log \left| e^{\gamma \ell} \right|}_{A} + \underbrace{20 \log \left| \frac{1}{\tau} \right|}_{R} + \underbrace{20 \log \left| 1 - \Gamma e^{2\gamma \ell} \right|}_{c}, \qquad (8\text{-}3)$$

where

ℓ = thickness of the shield,

γ = propagation constant of the shield,

τ = transmission coefficient,

and

r = reflection coefficient.

The shielding equation is often written as

$$SE = A + R + C \qquad (8\text{-}4)$$

where A, R, and C are the indicated three terms in Equation 8-3 and represent respectively the Absorption Loss, the Reflection Loss, and the Correction Term for re-reflections as discussed earlier. In a particular shielding application, the values of the constants γ, Γ, and τ depend upon the conductivity (σ), permeability (μ), and permittivity (ε) of the shielding material. The values of Γ and τ depend also upon the wave impedance of the EM wave impinging upon the shield.

For convenience in the use of the shielding effectiveness equation, the individual terms A, R, and C have been expressed in more readily usable forms as functions of the EM wave's frequency (f) and of the shield's thickness (ℓ), relative permeability (μ_r), and conductivity relative to copper (g_r). Simplified approximate expressions have been derived for the reflection and correction terms. The selection of the appropriate approximate expression will depend upon whether the wave impedance is low ($Z_w << 377\Omega$; magnetic field), medium ($Z_w = 377\Omega$; plane wave), or high ($Z_w >> 377\Omega$; electric field). Low impedance fields are found in the proximity of loop antennas, high impedance fields are found near dipole antennas, and plane waves exist away from the near fields of source antennas.

8.3.1 Absorption Loss.

The absorption loss of an EM wave passing through a shield of thickness ℓ can be shown (3-2) to be given by:

$$A = K_1 \ell \sqrt{f \mu_r g_r} \quad \text{dB},$$

where K_1 = 131.4 if ℓ is expressed in meters,

3.34 if ℓ is expressed in inches,

ℓ = shield thickness,

f = wave frequency, Hz,

μ_r = relative permeability of shield material, and

g_r = conductivity of shield material relative to copper.

Note that the absorption loss (in decibels) is proportional to the thickness of the shield and also that it increases with the square root of the frequency of the EM wave to be shielded against. As to the selection of the shielding material, the absorption loss is seen to increase with the square root of the product of the relative permeability and conductivity (relative to copper) of the shield material.

Table 8-1 contains a tabulation of electrical properties of shielding materials (g_r and μ_r); since μ_r is frequency dependent for magnetic materials, it is given for a typical shielding frequency of 150 kHz. The last two columns of Table 8-1 evaluate Equation 8-5 to give the absorption loss at 150 kHz for both a one millimeter and a one mil (0.001 inch) thick sheet for each of the listed materials. The absorption loss for other thickness can be calculated by simply multiplying by the shield thickness in millimeters or roils. Shield thicknesses are commonly expressed in either millimeters (mm) or mini-inches (roils); these two units are related as follows:

1 mm = 39.37 roils or 1 mil = 0.0254 mm

The variation of absorption loss with frequency, as well as a comparison of the absorption loss of three common shielding materials one mm thick, can be seen in Table 8-2. Also included is a listing of the relative permeability, as a function of frequency, for iron. Figure 8-3 presents the data of Table 8-2 in graphical form.

Remember that the absorption loss is just one of three additive terms which combine to give the attenuation (shielding efficiency) of the shield. At this point, the absorption loss has been presented in equation form (Equation 8-5), tabular form (Tables 8-1 and 8-2), and graphical form (Figure 8-3). The tabular and graphical forms are easy-to-use sources of accurate results when the shield material and frequency of interest are included in those tables and graphs. Quick results for almost any material and frequency combination can be obtained from an absorption nomograph (see Vol II), but the results are generally less precise; nomography are a good source of data for initial design purposes. Once a shielding material and thickness are tentatively selected, one may wish to compute a more precise value of the absorption loss by evaluation of Equation 8-5.

8.3.2 Reflection Loss.

According to Equation 8-3, the reflection loss portion, R, of the shielding effectiveness, SE, is given by:

$$R = -20 \log |\tau| \text{ dB}, \tag{8-6}$$

where τ is the transmission coefficient for the shield. The reflection loss includes the reflections at both surfaces of the shield (see Figure 8-2) and is dependent upon the wave impedance and frequency of the impinging EM wave as well as upon the electrical parameters of the shielding material. It is independent of the thickness of the shield.

Table 8-1

Electrical Properties of Shielding Materials at 150 kHz (8-3)

Metal	Relative Conductivity σ_r	Relative Permeability μ_r	Absorption Loss (dB)	
			1 mm thick	1 mil thick
Silver	1.05	1	51.96	1.32
Copper, annealed	1.00	1	50.91	1.29
Copper, hard-drawn	0.97	1	49.61	1.26
Gold	0.70	1	42.52	1.08
Aluminum	0.61	1	39.76	1.01
Magnesium	0.38	1	31.10	.79
Zinc	0.29	1	27.56	.70
Brass	0.26	1	25.98	.66
Cadmium	0.23	1	24.41	.62
Nickel	0.20	1	22.83	.58
Phosphor-bronze	0.18	1	21.65	.55
Iron	0.17	1,000	665.40	16.90
Tin	0.15	1	19.69	.50
Steel, SAE 1045	0.10	1,000	509.10	12.90
Beryllium	0.10	1	16.14	.41
Lead	0.08	1	14.17	.36
Hypernick	0.06	80,000	3484.00*	88.50*
Monel	0.04	1	10.24	.26
Mu-metal	0.03	80,000	2488.00*	63.20*
Permalloy	0.03	80,000	2488.00*	63.20*
Steel, stainless	0.02	1,000	224.40	5.70

* With no saturation by incident field.

In a manner analogous to the classical equations (8-1) describing reflections n transmission lines, the shield reflection loss can be expressed as:

$$R = 20 \log \frac{1 + S/2}{4S} \quad dB, \tag{8-7}$$

where S is defined as the ratio of the wave impedance to the shield's intrinsic impedance and is analogous to the voltage standing wave ratio in transmission line practice. While the shield's intrinsic impedance is easily determined from the electrical properties of the shield material, the wave impedance is highly dependent upon the type and location of the EM wave source, as indicated in Figure 8-4.

In order to present practical methods for determination of the reflection loss, three separate classes of EM waves are considered and approximations for the reflection loss relationships applicable to the three classes are presented. Since wave impedance is the ratio of electric to magnetic field strengths, a predominantly magnetic field will have a low impedance and a predominantly electric field will have a high impedance. The three wave impedance classes to be considered are low, medium, and high and are commonly referred to as the magnetic, plane wave, and electric field, respectively.

Table 8-2

Absorption Loss, A, of 1 mm Metal Sheet [8-2)

Frequency	Iron		Copper		Aluminum	
	μ_r	A (dB)	μ_r	A (dB)	μ_r	A (dB)
60.0 Hz	1,000	13	1	1	1	0.8
1.0 kHz	1,000	54	1	4	1	3.0
10.0 kHz	1,000	171	1	13	1	10.0
150.0 kHz	1,000	663	1	56	1	40.0
1.0 MHz	700	1,430	1	131	1	103.0
3.0 MHZ	600	2,300	1	228	1	178.0
10.0 MHz	500	3,830	1	416	1	325.0
15.0 MHz	400	4,200	1	509	1	397.0
100.0 MHz	100	5,420	1	1,310	1	1,030.0
1.0 GHz	50	12,110	1	4,160	1	3,250.0
1.5 GHz	10	6,640		5,090	1	3,970.0
10.0 GHz	1	5,420	1	13,140	1	10,300.0

Relative Conductivity, g_r: Iron - 0.17, Copper - 1.0, Aluminum - 0.61.

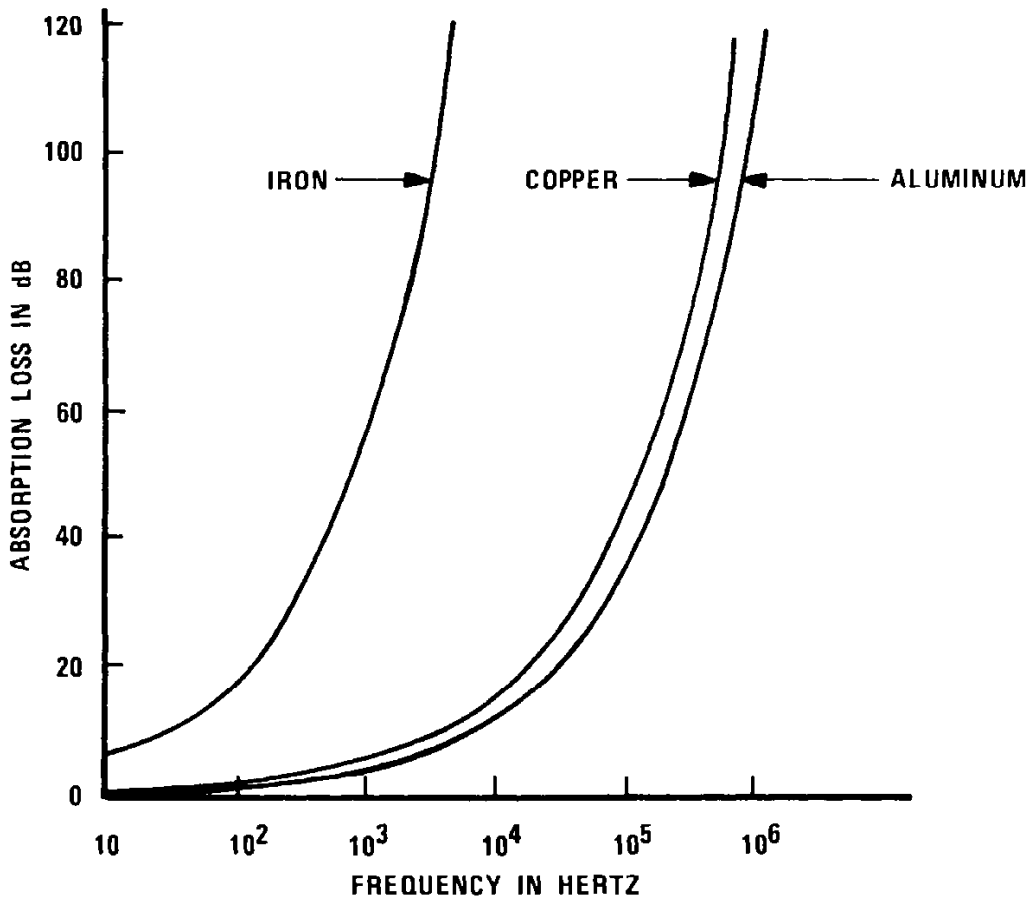

Figure 8-3. Absorption Loss for One Millimeter Shields

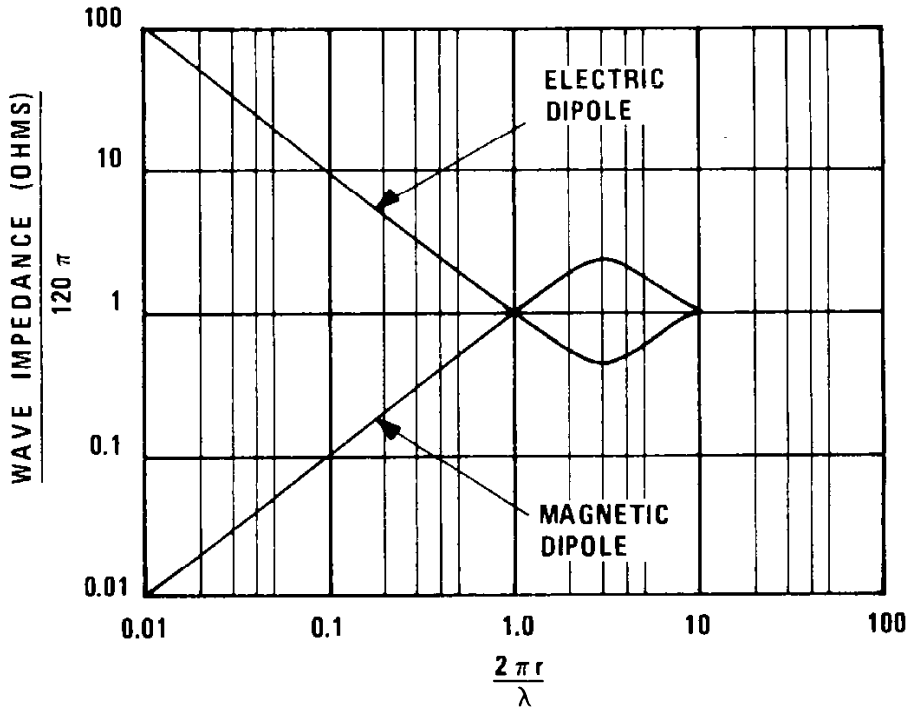

r = DISTANCE BETWEEN SOURCE AND MONITORING POINT, IN SAME UNITS AS WAVELENGTH, λ

Figure 8-4. Wave Impedance versus Distance from Source

8.3.2.1 Low Impedance Field.

A loop, or magnetic dipole, antenna produces an EM wave which is predominantly magnetic in the near field ($r < \lambda/2\pi$), where r is the distance from the antenna and λ is the wavelength of the EM field. For such magnetic (1ow impedance) EM fields, the reflection loss can be approximated as follows:

$$R_M = 20 \log \left(\frac{C_1}{r\sqrt{fg_r/\mu_r}} + C_2 r\sqrt{fg_r/\mu_r} + 0.354 \right), \tag{8-8}$$

where

r = distance from EM source to shield,

f = frequency (Hz),

g_r = conductivity of shield material relative to copper,

μ_r = relative permeability of shield material,

and the constants C_1 and C_2 depend upon the choice of units for the distance, r, as given in Table 8-3.

Table 8-3

Coefficients for Magnetic Field Reflection Loss

Coefficient	Units for Distance (r)			
	Meters	Millimeters	Inches	Mils
C_1	.0117	11.7	0.462	462
C_2	5.35	.0053	0.136	136

As with absorption loss, the reflection loss for low impedance fields depends upon electrical properties of the shield material and upon the EM wave frequency. However, the reflection loss depends upon the distance from the source to the shield rather than upon the shield thickness.

Figure 8-5 shows the reflection loss as a function of frequency for iron, copper, and aluminum shields at distances of one inch (2.54 cm) and ten inches (25.4 cm) from the low impedance EM field source. For a given separation distance, the reflection loss is seen to be greater for copper and aluminum than for iron except at the lower frequencies where iron has a better reflection loss. The curves cannot be extended to higher frequencies for these separation distances since the approximations used in the derivation of Equation 8-8 assume that the separation distance, r, is less than $\lambda/2\pi$. For higher frequencies at these distances, the EM fields are more closely approximated by plane waves rather than by low impedance fields. Figure 8-6 is a universal curve of the reflection loss for low-impedance sources as a function of the parameter

$$0.394\sqrt{\frac{f g_r}{\mu_r}}\ r.$$

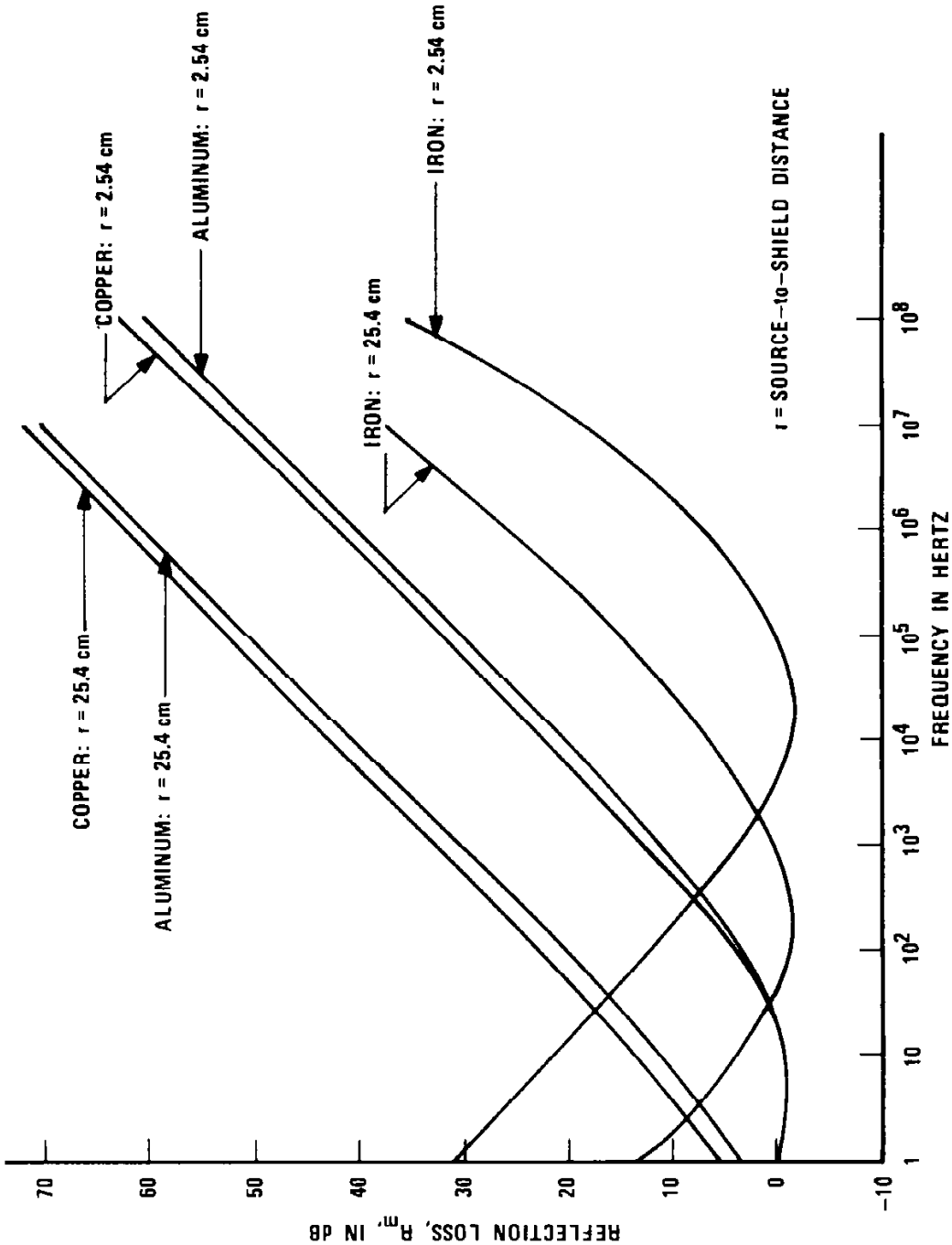

Figure 8-5. Reflection Loss for Iron, Copper, and Aluminum with a Low Impedance Source

8.3.2.2 Plane Wave Field.

The EM field at a distance of more than a few wavelengths from its source is essentially a plane wave with a wave impedance equal to the intrinsic impedance of the propagation media (377 Ω for air). A plane wave has its electric field and magnetic field vectors, E and H, perpendicular both to each other and to the direction of propagation.

Unlike the low- and high-impedance fields associated with the near-fields of magnetic dipole and electric dipole sources, the plane wave field reflection loss is independent of the distance between the source and shield. The reflection loss for a plane wave impinging upon a uniform shield is given by

$$R_p = 168 - 20 \log \sqrt{\frac{f \mu_r}{g_r}} , \qquad (8\text{-}9)$$

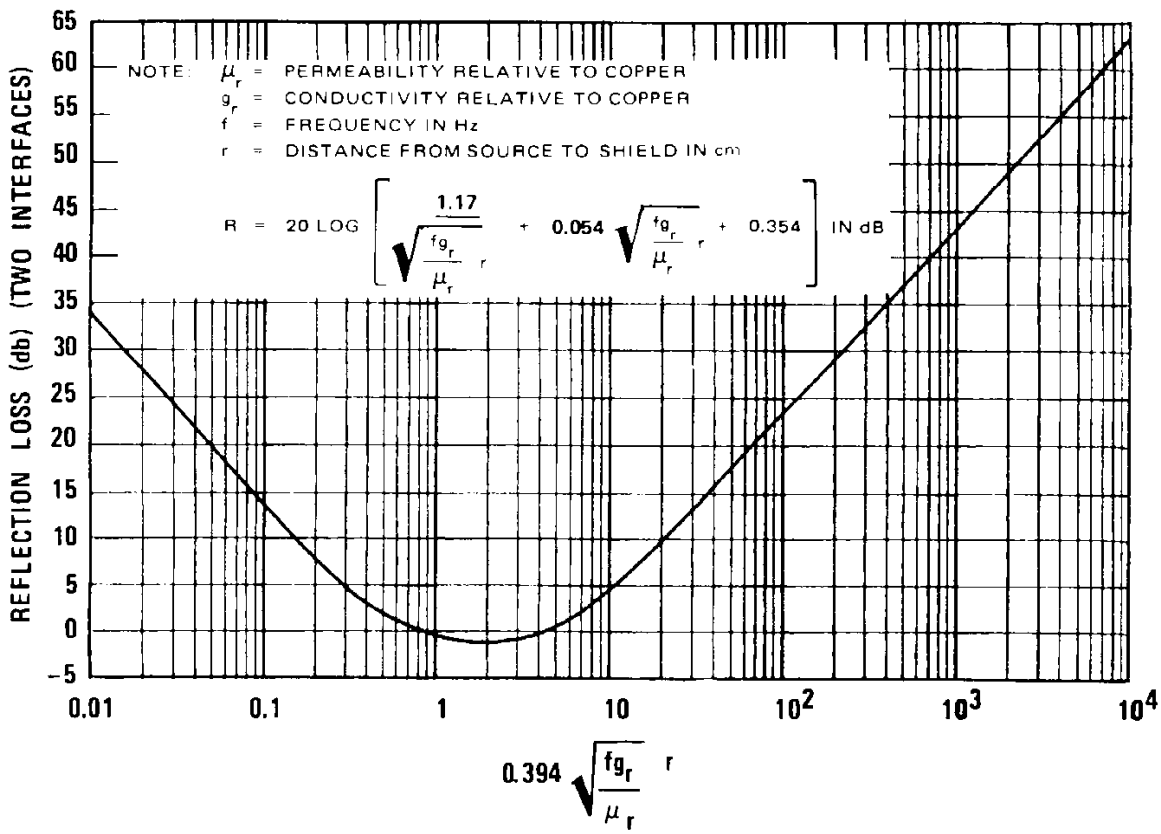

Figure 8-6. Universal Reflection Loss Curve for a Low Impedance Source (8-3)

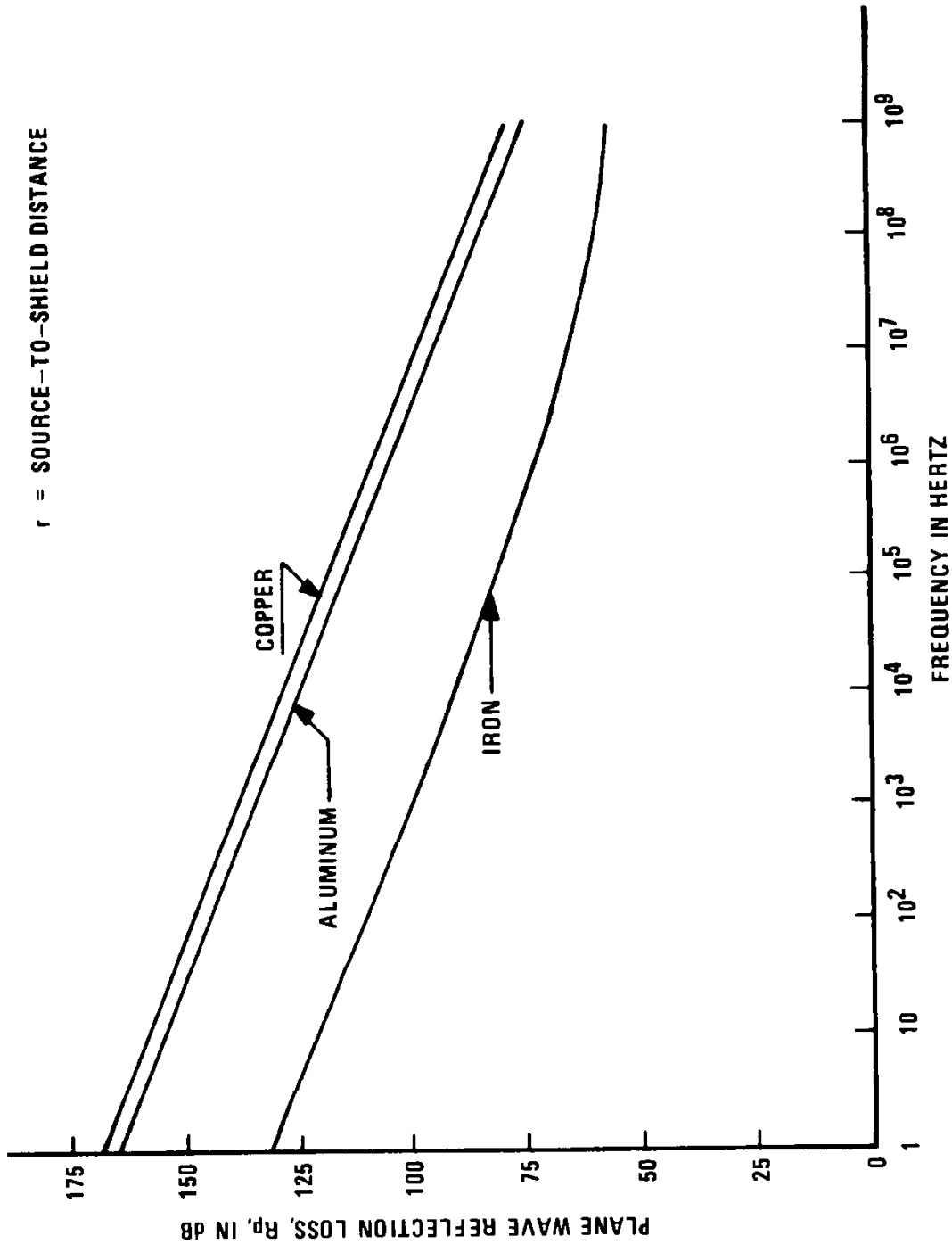

Figure 8-7. Plane Wave Reflection Loss for Iron, Copper, and Aluminum ($r > 2\lambda$)

where g_r, μ_r, and f are as defined with Equation 8-8. The plane wave reflection loss is seen to decrease as the wave frequency increases, and to be better for shielding materials with lower μ_r/g_r ratios. Figure 8-7 shows the plane wave reflection loss as a function of frequency for iron, copper, and aluminum shields. The curve for iron, unlike those for copper and aluminum, is not a straight line because iron's relative permeability is frequency dependent. Figure 8-8 provides a universal curve for plane wave reflection loss as a function of the parameter $\sqrt{f\mu_r/g_r}$.

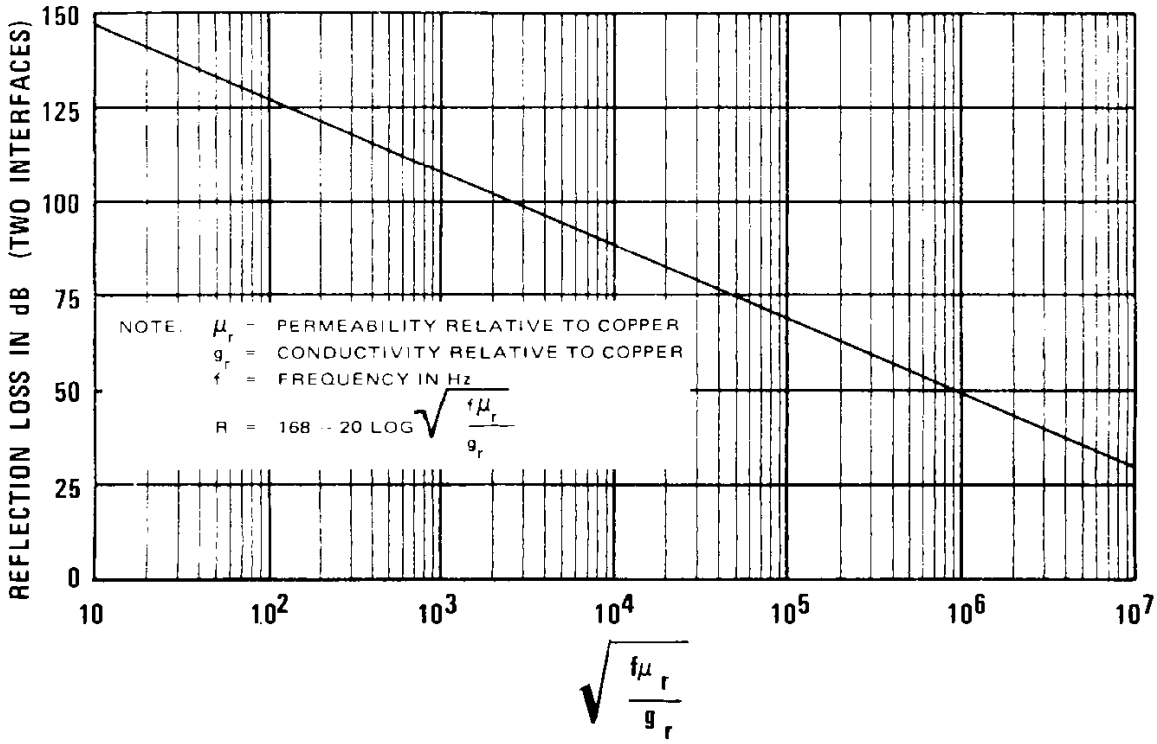

Figure 8-8. Universal Reflection Loss Curve for Plane Waves (8-3)

8.3.2.3 High Impedance Field.

The EM field in the proximity of an electric dipole antenna has a high electric field-to-magnetic field strength ratio (high wave impedance). The reflection loss for such a field encountering a shield is given by

$$R_E = C_3 - 10 \log \frac{\mu_r f^3 r^2}{g_r}, \tag{8-10}$$

where

C_3 = 322, if r is in meters
C_3 = 354, if r is in inches,

and r, g_r, μ_r and f are as identified as in Equation 8-8. The high impedance EM wave reflection loss is seen to depend upon the separation distance, r, between the EM source and the shield, as does the low impedance case. The reflection loss is seen to decrease as the frequency increases and to be better when the ratio g_r/μ_r is higher. Figure 8-9 is a universal curve for the high impedance reflection loss; the upper line is for the parameter range.

$$1 < 0.394r\sqrt{\frac{\mu_r f^3}{g_r}} < 10^6$$

and the lower line covers the range

$$0.394r\sqrt{\frac{\mu_r f^3}{g_r}} > 10^6$$

Figure 8-10 shows a plot of the high impedance EM wave reflection loss as a function of frequency for iron, copper, and aluminum for source-to-shield separation distances of one and ten inches. Separate curves for copper and aluminum are not shown since the high impedance reflection loss for aluminum is only 2 dB below that of copper.

The reflection losses for iron, copper, and aluminum shields at representative frequencies for magnetic, electric, and plane waves are given in Table 8-4. The source-to-shield distance for the magnetic and electric wave cases is one foot (30.5 cm).

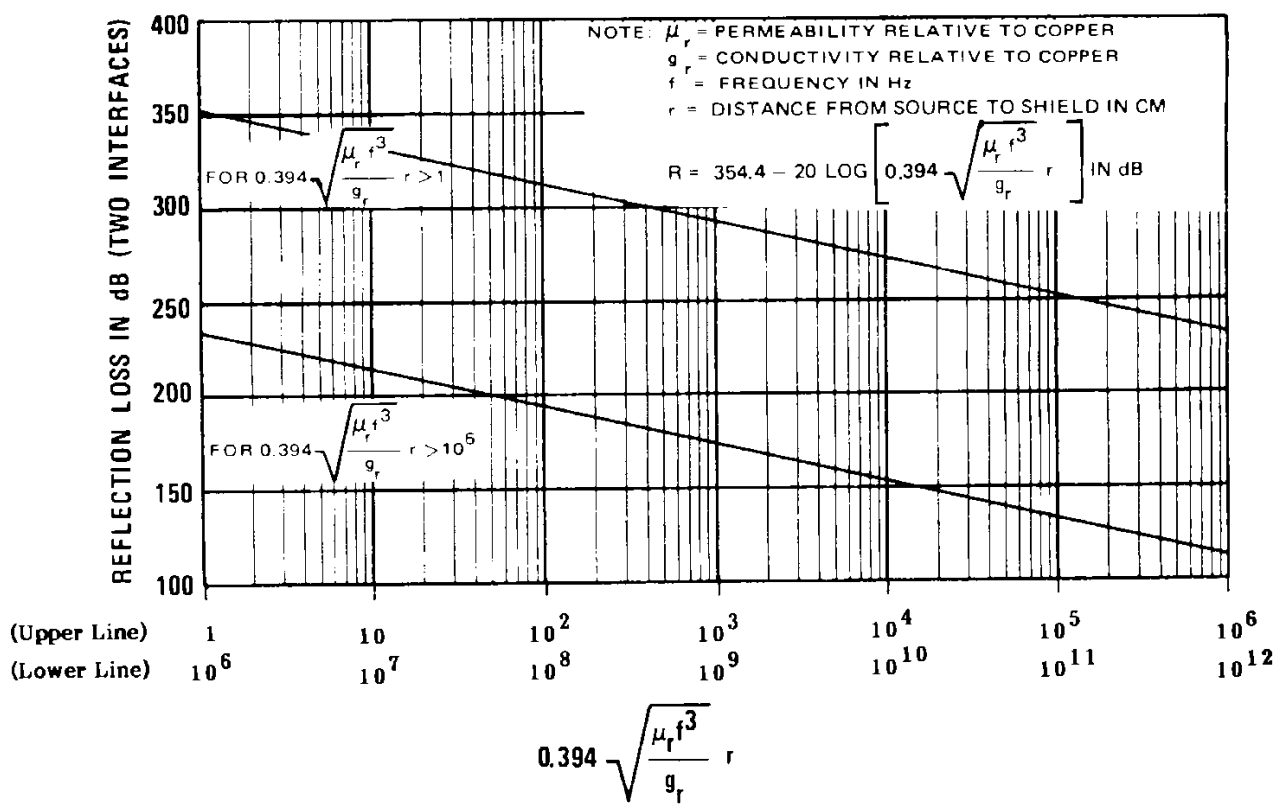

Figure 8-9. Universal Reflection Loss Curve for High Impedance Fields (8-3)

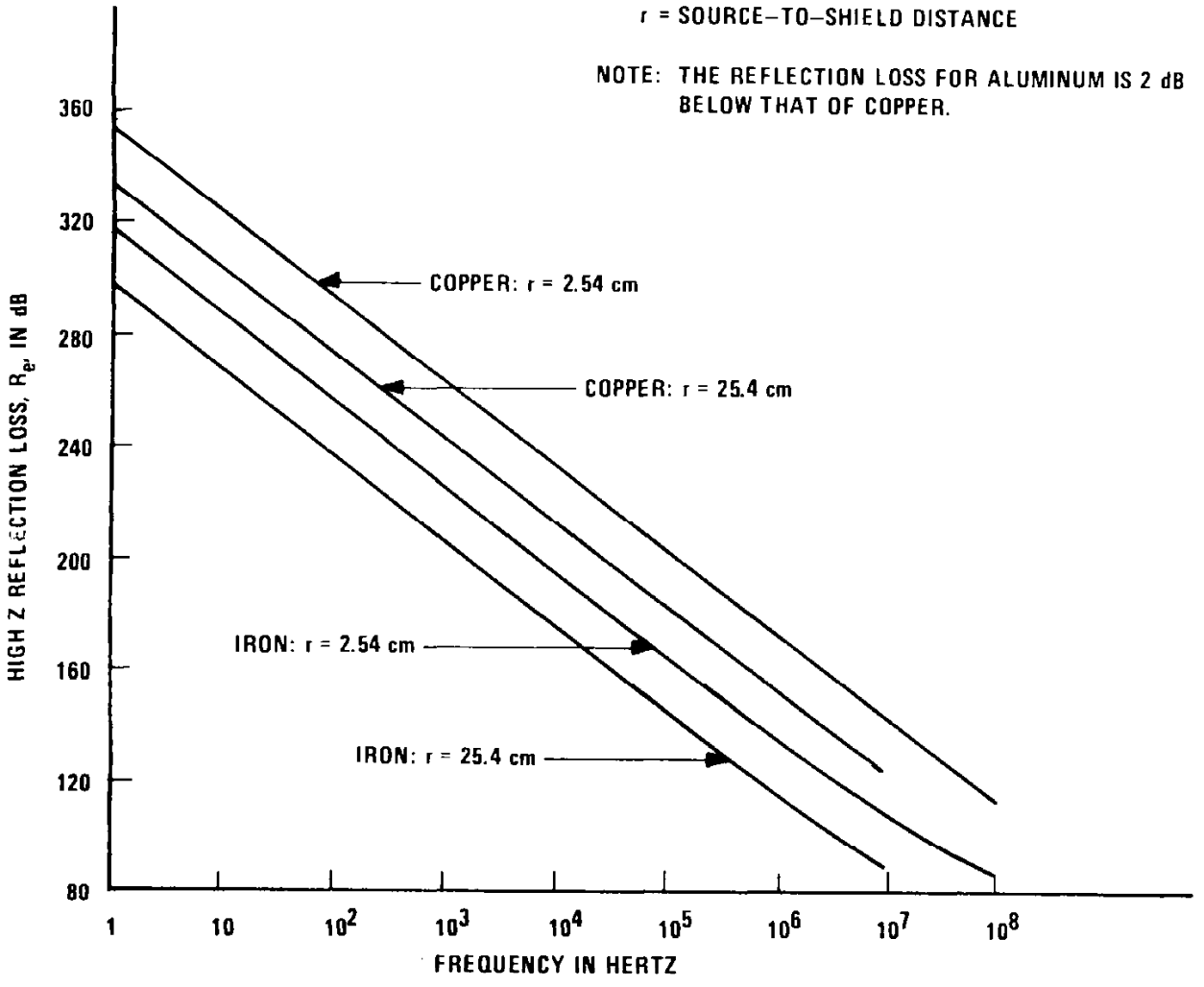

Figure 8-10. Reflection Losses for Iron, Copper, and Aluminum with a High Impedance Source

Table 8-4

Calculated Reflection Loss in dB of Metal Sheet, Both Faces (8-2), (8-3)

Frequency		Reflection Loss*							
		Iron (g_r = 0.17)			Copper (μ_r = 1, g_r = 1)			Aluminum (μ_r = 1, g_r = 0.61) ***	
	μ_r	Magnetic Field r = 30.5 cm	Electric Field r = 30.5 cm	Plane Wave Field	Magnetic Field r = 30.5 cm	Electric Field r = 30.5 cm	Plane Wave Field	Magnetic Field r = 30.5 cm	Electric Field r = 30.5 cm
60.0 Hz	1000	-0.9 **	241	113	22	279	150	-	-
1.0 kHz	1000	0.9	204	101	34	242	138	-	-
10.0 kHz	1000	8.0	174	91	44	212	128	-	-
150.0 kHz	1000	10.0	139	79	56	177	117	54	175
1.0 MHz	700	28.0	116	72	64	152	108	62	150
15.0 MHz	400	42.0	83	63	76	117	96	74	115
100.0 MHz	100	57.0	64	61	84	92	88	82	90
1.5 GHz	10	59.0 +	59 +	59	76+	76 +	76	-	-
10.0 GHz	1	61.0 +	61 +	61	69+	68 +	68	-	-

* If Absorption Loss <15 dB, use Correction Factor C

** The Reflection Loss for iron is zero at 620 Hz, it is a negative quantity at 60 Hz, zero at 31.5 Hz, and becomes positive at lower frequencies.

*** Plane-Wave Field not provided (normally close to that of copper).

\+ At these frequencies and for given distance, the field becomes a plane wave.

8.3.3 Re-Reflection Correction Factor.

For shields in which the absorption loss (A) is reasonably large, say at least 10 dB, the energy reflected back into the shield at the second surface does not contribute significantly to the wave propagated through and beyond the shield. However, when the shield's absorption loss is low, a significant amount of energy is reflected at the second surface and finally propagated into the area to be shielded. Accordingly, for shields with low absorption, the shielding effectiveness is calculated as the sum of (1) the absorption loss, A, (2) the reflection loss, R, and (3) a re-reflection correction factor, C. The correction factor is

$$C = 20 \log [1 - \Gamma \cdot 10^{-A/10} (\cos [0.23A] - j \sin [0.23A])], \qquad (8\text{-}11)$$

where A is the shield's absorption loss (see Equation 8-5) and Γ is the two-boundary reflection coefficient; Γ is dependent upon both the shield characteristic impedance and the wave impedance of the impinging EM wave. Equations for the reflection coefficient, Γ, are given in terms of a precalculation parameter, m, for each of three wave impedance classes in Table 8-5.

Values of the re-reflection correction terms for iron and copper sheets of various thicknesses and typical frequencies are given in Table 8-6. The correction term is seen to approach zero for thick shields or high frequencies since these conditions correspond to large absorption losses in the shield. The larger absorption loss of iron (compared with copper) for fixed frequency and thickness is also seen to result in a smaller correction term, Figure 8-11 presents the correction term in graphical form for copper in a magnetic (low impedance) field. Figure 8-12 presents a universal absorption loss curve (Equation 8-5). Recall that the correction term (Equation 8-11) depends upon the absorption loss, A, and that the reflection coefficient, Γ, is essentially unity. whenever the approximation $\Gamma = 1$ is valid, the correction term depends only upon the value of the absorption loss. For such conditions, the sum of the absorption loss and the re-reflection correction term is given by the dashed line on the universal curve in Figure 8-12.

8.3.4 Total Shielding Effectiveness. The item of interest for any shield is the (total) shielding effectiveness, i.e., the sum of the absorption loss (A), reflection loss (R), and the multi-reflection correction term (C). The terms, A, R, and C are of significance only as a means of predicting the shielding effectiveness. Table 8-7 contains the individual terms and the total shielding effectiveness for various shield thicknesses and EM wave frequencies for copper, iron, and aluminum shields. The entries under "SOURCE" designate the EM wave impedance classification: L indicates a loop antenna and designates a predominantly magnetic field, D indicates an electric dipole antenna and designates a predominantly electric field, and P indicates a plane wave ($Z_w = 377\ \Omega$). All entries except the plane waves are for a source-to-shield separation distance of one foot. Figures 8-13 and 8-14 illustrate the total theoretical shielding performance which one may expect to obtain from enclosures constructed from copper foil and iron sheet to the electric, magnetic and plane wave propagation modes, although the effect of doors, ventilation apertures, and power line penetrations has not been considered; in many applications these penetrations, together with techniques used for joining the shield materials, markedly reduce the overall practical insertion loss of a shielded enclosure.

Table 8-5

Coefficients for Evaluation of Re-Reflection Correction Term, C

Type Field	Reflection Coefficient, Γ	Parameter, m (for r in meters)
Magnetic (Low Impedance)	$4\,\dfrac{(1-m^2)^2 - 2m^2 + j2\sqrt{2}\,m(1-m^2)}{[(1+\sqrt{2}\,m)^2+1]^2}$	$\dfrac{4.7 \times 10^{-2}}{r}\sqrt{\dfrac{\mu_r}{fg_r}}$
Plane Wave* ($F_w \simeq 377\Omega$)	$4\,\dfrac{(1-m^2)^2 - 2m^2 - j2\sqrt{2}\,m(1-m^2)}{[(1+\sqrt{2}\,m)^2+1]^2}$ $\simeq 1$	$9.77 \times 10^{-10}\sqrt{\dfrac{f\mu_r}{g_r}}$
Electric (High Impedance)	$4\,\dfrac{(1-m^2)^2 - 2m^2 - j2\sqrt{2}\,m(1-m^2)}{[(1-\sqrt{2}\,m)^2+1]^2}$	$0.205 \times 10^{-16}\,r\sqrt{\dfrac{\mu_r f^3}{g_r}}$

*For plane waves, m is so small that Γ is essentially unity.

Table 8-6

Correction Term C in dB for Single Metal Sheet (8-2)

Thickness* (mils)	Frequency 60 Hz	100 Hz	1 kHz	10 kHz	100 kHz	1 MHz
	Copper, $\mu_r = 1$, $g_r = 1$, near field of loop					
1	-22.2	-24.00	-28.00	-20.0	-10.0	-3.0
5	-21.7	-22.00	-16.00	-7.0	-0.6	+0.1
10	-19.2	-19.00	-10.00	-3.0	+0.6	0.0
20	-15.6	-14.00	-5.00	+0.1	+0.1	
30	-13.0	-11.00	-3.00	+0.6	0.0	
50	-9.0	-7.00	-0.60	0.0		
100	-4.0	-3.00	+0.50			
200	-0.8	+0.50	0.00			
300	+0.3	+0.50				
	Copper, $\mu_r = 1$, $g_r = 1$, plane waves and near field of electric dipole					
1	-42.0	-40.00	-30.00	-20.0	-10.0	-3.0
5	-28.0	-25.00	-16.00	-7.0	-0.6	+0.1
10	-22.0	-20.00	-10.00	-3.0	+0.6	0.0
20	-16.0	-14.00	-5.00	+0.1	+0.1	
30	-13.0	-11.00	-3.00	+0.6	0.0	
50	-9.0	-7.00	-0.60	+0.1		
100	-4.0	-3.00	+0.50	0.0		
200	-0.6	+0.10	0.00			
300	+0.1	+0.60				
	Iron, $\mu_r = 1000$, $g_r = 0.17$, near field of loop					
1	1.0	1.00	-1.60	-1.8		
5	0.9	0.90	-0.60	0.0		
10	0.8	0.50	+0.06			
20	0.4	0.08	0.00			
30	0.06	0.06				
50	0.00	0.00				
	Iron, $\mu_r = 1000$, $g_r = 0.17$, plane waves and near field of electric dipole					
1	-20.00	-17.00	-8.0	-1.3		
5	-7.00	-5.00	+0.2	0.0		
10	-3.00	-1.30	+0.4			
20	+0 .20	+0.50	0.0			
30	+0.60	+0.40				
50	+0.10	0.00				

*1 mil equals 0.0254 mm

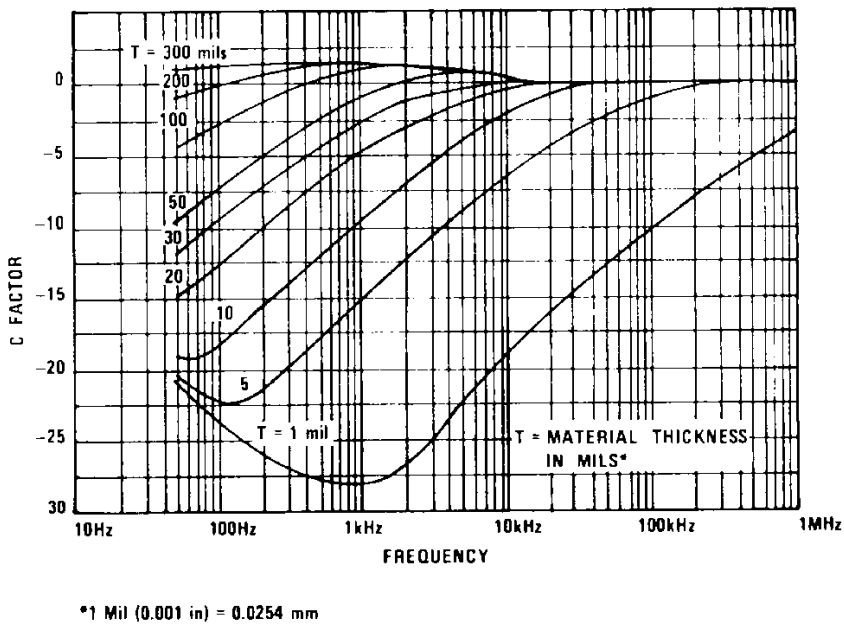

Figure 8-11. Graph of Correction Term (C) for Copper in a Magnetic Field (8-4)

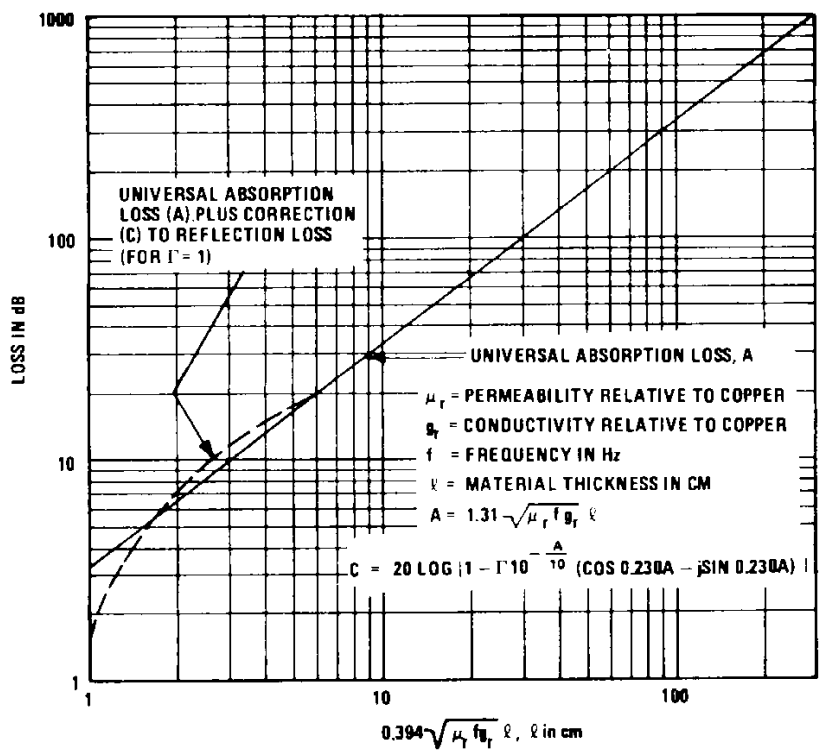

Figure 8-12. Absorption Loss and Multiple Reflection Correction Term when $\Gamma = 1$ (8-2)

Table 8-7

Calculated Values of Shielding Effectiveness (8-2)

Thickness (mils)	Frequency (Hz)	Source*	R (dB)	A (dB)	C (dB)	SE= A + R + C (dB)
			Copper			
1	60	L	22.4	0.026	-22.20	0.23
10	60	L	22.4	0.260	-19.20	3.46
300	60	L	22.0	7.800	+0.32	30.12
10	1 k	L	34.2	1.060	-10.37	24.89
10	10 k	L	44.2	3.340	+2.62	50.16
10	10 k	D	212.0	3.340	-2.61	212.73
10	10 k	P	128.0	3.340	-2.61	128.73
30	10 k	L	44.2	10.020	+0.58	54.80
10	150 k	L	56.0	12.900	0.50	69.40
10	150 k	D	176.8	12.900	0.50	190.20
10	150 k	P	117.0	12.900	0.50	130.40
10	1 M	L	64.2	33.400	0.00	97.60
10	1 M	D	152.0	33.400	0.00	185.40
10	1 M	P	108.0	33.400	0.00	141.40
10	15 M	L	76.0	129.00	0.00	205.00
10	15 M	D	116.0	129.00	0.00	245.00
10	15 M	P	96.0	129.00	0.00	225.00
10	100 M	L	84.0	334.00	0.00	418.00
10	100 M	D	92.0	334.00	0.00	426.00
10	100 M	P	88.0	334.00	0.00	422.00

Table 8-7 (Continued)

Calculated Values of Shielding Effectiveness

Thickness (mils)	Frequency (HZ)	Source*	R (dB) Iron	A (dB)	C (cm)	SE= A + R + C (dB)
1	60	L	-0.9	0.33	+0.95	0.38
10	60	L	-0.9	3.30	+0.78	3.18
300	60	L	-0.9	100.00	0.00	99.10
10	1 k	L	0.9	13.70	+0.06	14.66
10	10 k	L	8.0	43.50	0.00	51.50
10	10 k	D	174.0	43.50	0.00	217.50
10	10 k	P	99.5	43.50	0.00	143.00
30	10 k	L	8.0	130.50	0.00	138.50
10	150 k	L	19.0	160.00	0.00	179.00
10	150 k	D	139.0	169.00	0.00	308.00
10	150 k	P	79.0	169.00	0.00	248.00
10	1 M	L	28.0	363.00	0.00	391.00
10	1 M	D	116.0	363.00	0.00	479.00
10	1 M	P	72.0	363.00	0.00	435.00
10	15 M	L	42.0	1060.00	0.00	1102.00
10	15 M	D	83.0	1060.00	0.00	1143.00
10	15 M	P	63.0	1060.00	0.00	1123.00
10	100 M	L	56.0	1370.00	0.00	1426.00
10	100 M	D	64.0	1370.00	0.00	1434.00
10	100 M	P	60.0	1370.00	0.00	1430.00

Table 8-7 (Continued)

Calculated Values of Shielding Effectiveness

Thickness (mils)	Frequency (Hz)	Source*	R (dB) Aluminum	A (dB)	C (dB)	SE= A + R + C (dB)
10	1 M	L	62.0	26.0	0.00	88.0
10	1 M	D	150.0	26.0	0.00	176.0
10	1 M	P				
10	15 M	L	79.0	100.0	0.00	179.0
10	15 M	D	115.0	100.0	0.00	215.0
10	15 M	P				
10	100 M	L	82.0	260.0	0.00	342.0
10	100 M	D	90.0	260.0	0.00	350.0
10	100 M	P				

*L = near field of loop or magnetic dipole, r = 30 cm from shield.
D = near field of electric dipole, r = 30 cm from shield.
P = plane wave.

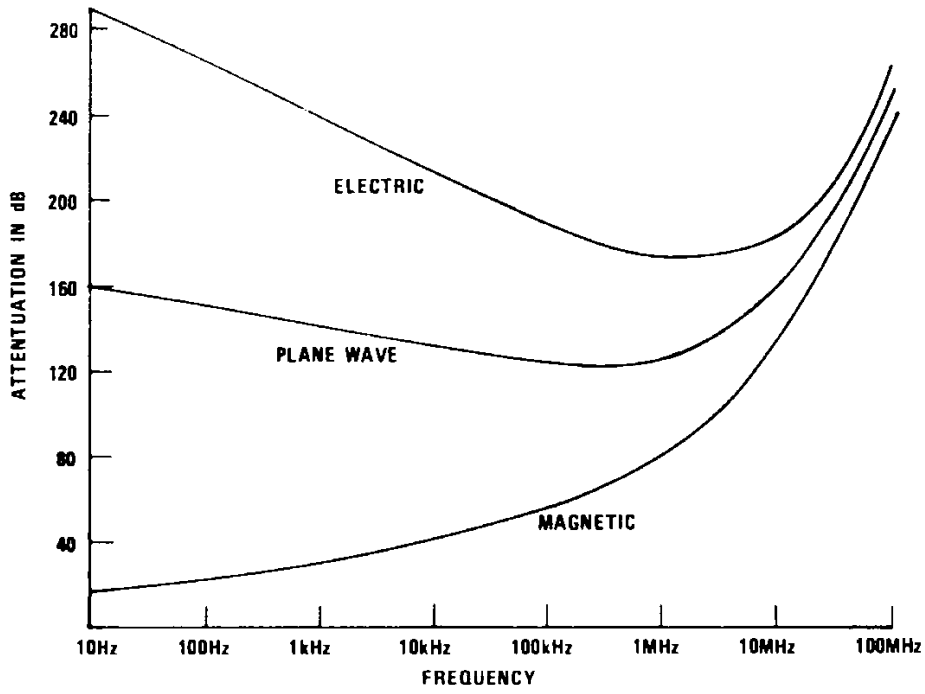

Figure 8-13. Theoretical Attenuation of Thin Copper Foil (8-5)

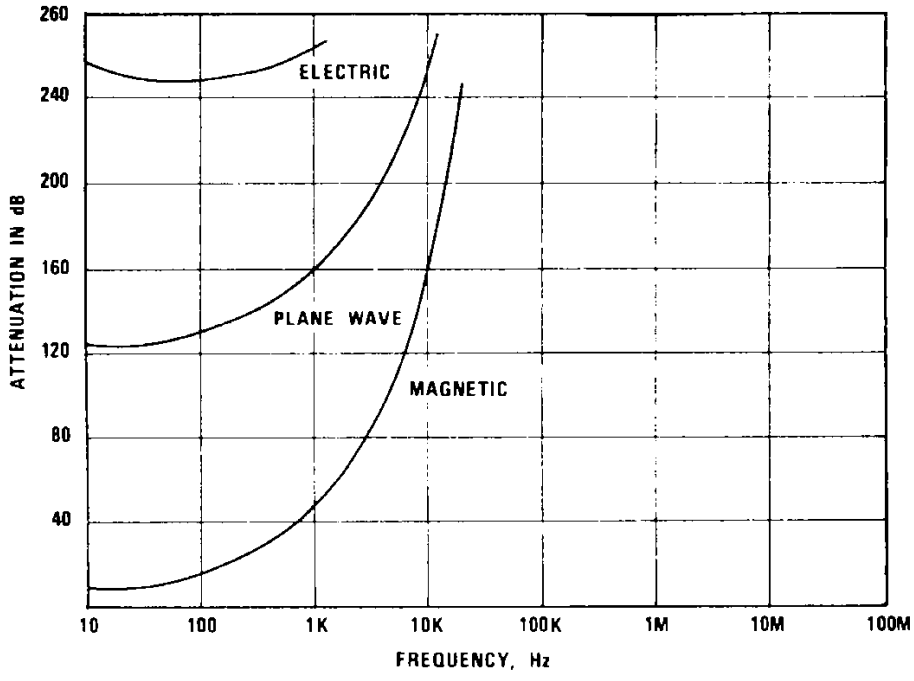

Figure 9-14. Theoretical Attenuation of Thin Iron Sheet (8-5)

8.3.4.1 Measured Data.

In contrast to the theoretical shielding effectiveness presented thus far, Table 8-8 and Figures 8-15 and 8-16 present actual measured data. Figure 8-15 illustrates representative shielding effectiveness data taken for a variety of high-permeability sheet materials. Loop sensors were located 0.3 cm (1/8") from each sheet. The figure shows the typical leveling off in shielding effectiveness as frequency is decreased, with the breakpoint occurring in the l-kHz range. Low frequency magnetic shielding is essentially achieved by establishing a low reluctance path in which the magnetic field is contained. The variation of shielding effectiveness as a function of loop sensor separation is shown in Figure 8-16 for one of the materials plotted in the previous figure. A change in effectiveness of about 5 dB over the range of the test at a particular frequency is indicated.

A difficulty with most magnetic shielding materials is their tendency to change permeability when formed, machined, subjected to rapid or extreme temperature changes, or dropped. These processes change the orientation of the magnetic domains in the material, and it is necessary to reorient the domains by annealing to restore the initial magnetic properties. A typical annealing process involves heating the material to about 2000° F (sometimes in an inert gas environment), holding it at that temperature for approximately two hours, and letting it slowly cool to room temperature.

8.3.4.2 Summary.

The shielding effectiveness in dB for a shield is calculated as the sum of three terms: absorption loss (A), reflection loss (R), and a correction term (C). The absorption loss is independent of the distance from the EM source. It depends upon the shield thickness and the shielding material's conductivity and permeability, as well as upon the frequency of the incident EM wave. However, the reflection loss (like that of a junction of two types of transmission lines) depends upon the ratio of the EM wave impedance to the shield impedance and is therefore dependent upon both the EM source type and the distance between the source and shield. It is also dependent upon the EM source frequency and the shield material's conductivity and permeability but does not depend upon the thickness of the shield. The multi-reflection correction term is essentially zero for shields with absorption losses greater than 10 dB; for shields with less absorption loss the correction factor should be used. It is dependent upon the EM wave impedance classification and the absorption loss, as well as the frequency, conductivity, and permeability. Table 8-9 summarizes the shielding equations.

Equations, tables, and graphs, have been presented for evaluation of the components of the shielding effectiveness. The choice of which form to use will be influenced by the time available to the user and the accuracy to which the data is needed.

Table 8-8

Measured Shielding Effectiveness in dB for Solid-Sheet Materials (8-3)

Type Wave	Material	Thickness (mils)	Nominal Effectiveness 0.1 kHz	1 kHz	10 kHz	85 kHz	200 kHz	2 MHz	5 MHz	10 MHz
Plane	Cu	2.5					109	106	114	
Plane	Al	5.0					107	109	118	
Plane	Stainless Steel	18.0					97	95	99	
Plane	Steel (μ_r = 250)	4.5					105	99	101	
Plane	AA-Conetic Foil (μ_r = 10,000)	3.5					97	130		
Low Impedance	Cu	125.0	8	22	58					
		63.0				97				
		31.0	4	11	29	59		120		
		4.5				34		55		
Low Impedance	Al	125.0	5	18	50					
		63.0	1	16	35	78				
		31.0	1	10	24					
Low Impedance	Steel	63.0	25	40	80					
		31.0	4	28	59	94		92		120
Low Impedance	Cu-Clad Steel Clad 2 Sides	31.0				107				

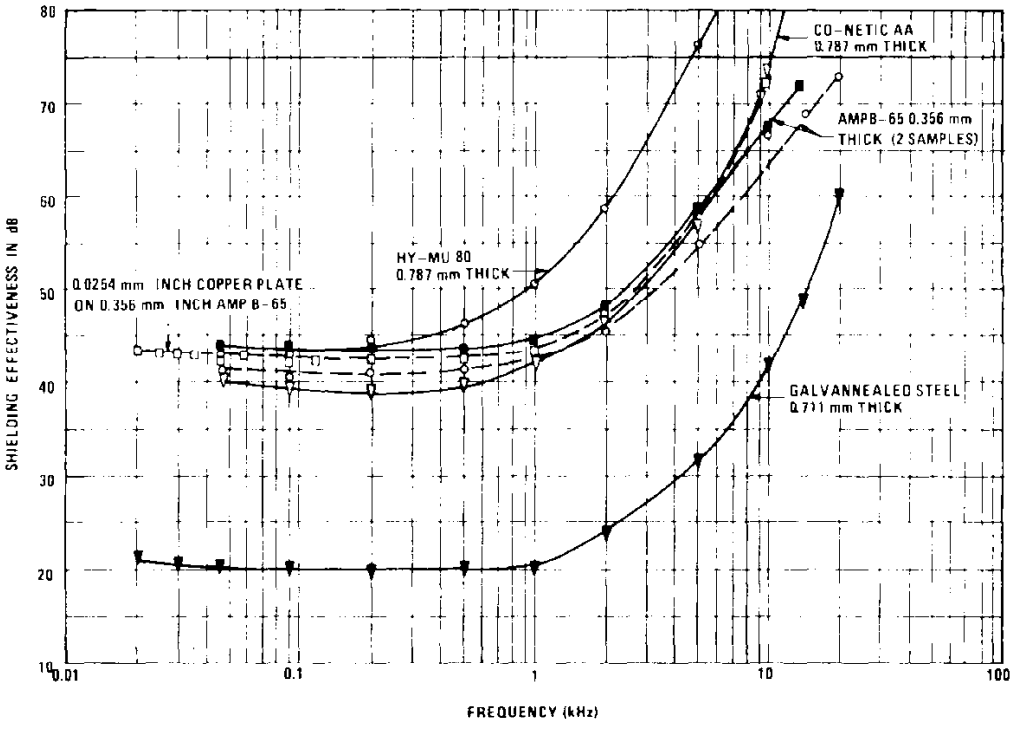

Figure 8-15. Measured Shielding Effectiveness of High Permeability Metals (8-6)

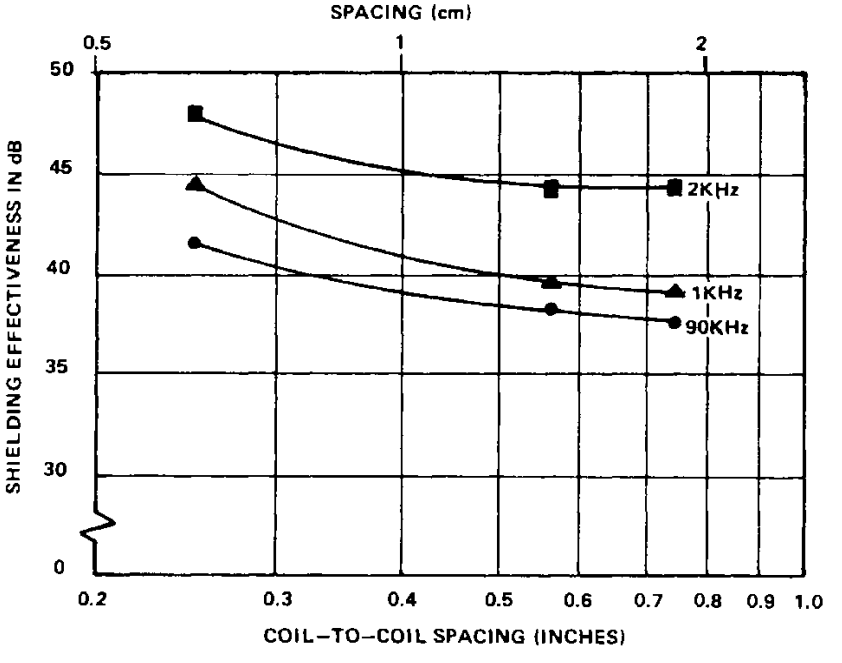

Figure 8-16. Measured Shielding Effectiveness of High Permeability Material as a Function of Measurement Loop Spacing (8-6)

Table 8-9

Summary of Formulas for Shielding Effectiveness

$$SE = A + R + C$$

r = distance from source to shield (in meters)
μ_r = relative permeability
g_r = conductivity relative to copper
f = frequency (Hz)
k = antenna correction factor
L = largest dimension of antenna (in meters)
Γ = reflection coefficient
m = precalculation parameter

Source	Attenuation, A	Reflection Loss, R	Correction Term C*
Plane Wave $r \geq \frac{kL^2}{\lambda}$ or $r \geq 2\lambda$ (dipole)	$131.41\sqrt{f\mu_r g_r}$	$168 + 20 \log \sqrt{\frac{g_r}{f\mu_r}}$	$\Gamma = 4 \frac{(1 - m^2)^2 - 2m^2 - j2\sqrt{2}m(1 - m^2)}{[(1 + \sqrt{2}m)^2 + 1]^2}$ $m = 9.77 \times 10^{-10} \sqrt{\frac{f\mu_r}{g_r}}$
Loop, near field	$131.41\sqrt{f\mu_r g_r}$	$-9 + 20 \log \frac{3.32 \times 10^{-2}}{r} \sqrt{\frac{\mu_r}{fg_r}} + 1 + 15.1r \sqrt{\frac{fg_r}{\mu_r}}$	$\Gamma = 4 \frac{(1 - m^2)^2 - 2m^2 + j2\sqrt{2}m(1 - m^2)}{[(1 + \sqrt{2}m)^2 + 1]^2}$ $m = \frac{4.7 \times 10^{-2}}{r} \sqrt{\frac{\mu_r}{fg_r}}$
Electric dipole, near field	$131.41\sqrt{f\mu_r g_r}$	$322 + \log \frac{1}{r} \sqrt{\frac{g_r}{\mu_r f^3}}$	$\Gamma = 4 \frac{(1 - m^2)^2 - 2m^2 - m2\sqrt{2}m(1 - m^2)}{[(1 + \sqrt{2}m)^2 + 1]^2}$ $m = 0.205 \times 10^{-16} r \sqrt{\frac{\mu_r f^3}{g_r}}$

*$C = 20 \log \left[1 - \Gamma 10^{-A/10} (\cos 0.23A - j \sin 0.23A) \right]$

8.4 SHIELDING EFFECTIVENESS OF OTHER SHIELDS.

8.4.1 Multiple Solid Shields.

There are cases when it is appropriate to consider using two or even three layers of shielding material rather than a single sheet to obtain particular total shielding characteristics. The most frequently encountered circumstances are when good protection against both electric and magnetic fields is desired, although other situations also occur.

Although Mumetal and similar types of high-permeability alloys provide good shielding for low-frequency weak magnetic fields, they tend to be less effective under the saturating effects of high-level fields. Where magnetic shielding in strong signal environments is necessary, it is often desirable to use a multiple shield, where the outer material has a lower permeability but a higher saturation level than the inner material. Such a structure might be constructed with materials having the characteristics given in Table 8-10.

Table 8-10

Magnetic Material Characteristics

Property	Inner Material (Co-Netic AA)	Outer Material (Netic S 3-6)
Initial Permeability	20,000.00	300.0
Permeability at 0.02 tesla	80,000.00	500.0
Saturation Inductance (tesla)	0.75	2.2

The material thickness necessary would be dictated by the unexpected levels of external fields and the desired suppression.

When much of the usefulness of shielding is due to reflection loss, two or more layers of metal separated by dielectric materials and yielding multiple reflections, will provide greater shielding than the same thickness of metal in a single sheet. The separation of the two layers of metal is necessary to provide for the additional discontinuous surfaces. A similar advantage has been noted with magnetic sheet materials (see Figure 8-17).

For the special case where two metallic sheets of the same material and thickness are separated by an air space, the penetration and reflection losses are each twice of those of a single sheet. However, the correction factors differ from double the value of a single sheet. One term in the correction factor is negative over much of the frequency range.

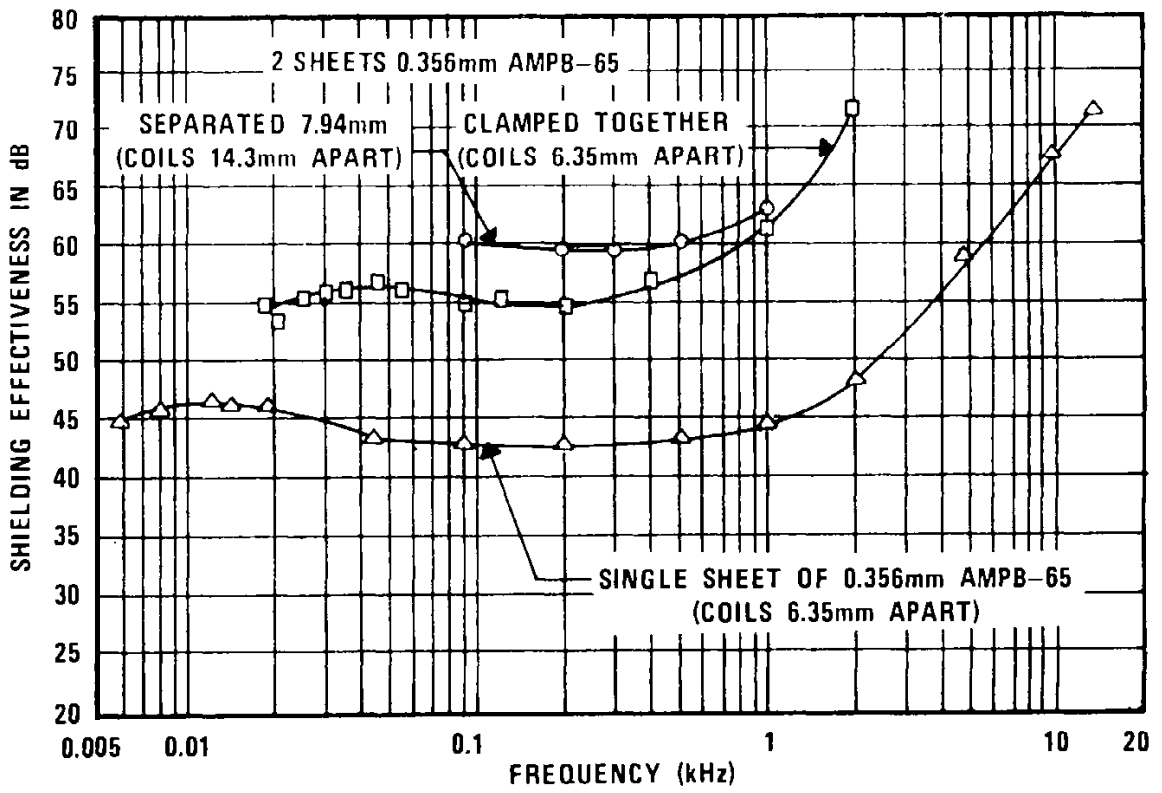

Figure 8-17. Measured Shielding Effectiveness of Two Sheets of a High Permeability Metal (8-6)

Consequently, a double shield is considerably less effective than the sum of two single shields. However, it is considerably more effective than a single shield of the same total thickness.

8.4.2 Coatings and Thin-Film Shields.

Thin shielding* has been employed in a variety of ways, ranging from metallized component packaging for protection against RF fields during shipping and storing, to vacuum deposited shields for microelectronics applications, and to wallpaper-like shielding material for shielded enclosures.

Solid material shielding theory is applicable to thin-film shields. For shields much thinner than $\lambda/4$, the absorption loss is very small, but the multiple reflection correction term C, is fairly large and negative, thus offsetting a portion of the reflection loss. The implication of the negative term is that the various reflections have additive phase relationships, and thus reduce the effectiveness of the shield. The shield effectiveness is essentially independent of frequency. When the shield thickness exceeds $\lambda/4$, the multiple reflection term becomes negligible, and there is no offsetting effect to the other losses. Thus the material shielding effectiveness increases and is frequency dependent.

* The thickness of a thin-film shield is often expressed in Angstroms. This unit is related to roils by 1 Angstrom (Å) = 3.937×10^{-6} mils.

Table 8-11 provides representative calculations of the shielding effectiveness of thin-film cover for different thicknesses and frequencies. One-quarter wavelength in copper is approximately 0.13 mils at 1 GHz, and it can be seen that shield effectiveness changes significantly above this thickness.

Table 8-11
Calculated Values of Copper Thin-Film Shielding Effectiveness in dB Against Plane-Wave Energy (8-7)

Thickness	0.0041 Mils		0.049 Mils		0.086 Mils		0.86 Mils	
Frequency	1 MHz	1 CHz	1 MHz	1 GHz	1 MHz	1 GHz	1 MHz	1 GHz
Absorption Loss, A	0.014	0.44	0.16	5.2	0.29	9.2	2.9	92
Single Reflection Loss, R	109	79	109	79	109	79	109	79
Multiple Reflection Correction Term, C	-47	-17	-26	-6	-21	0.6	-3.5	0
Shield Effectiveness, SE	62	62	83	78	88	90	108	171

8.4.3 Screens and Perforated Metal Shields.

There are many applications in which the shield cannot be made of a solid material. Screens and perforated materials must be employed if an enclosure must be transparent (e. g., a meter face) or ventilated. The shielding effectiveness of solid metal shields has been treated from the viewpoint of classical transmission line theory in the preceding sections. To obtain an expression for shielding effectiveness which is applicable to screens and perforated metal sheets, it is necessary to account for the following

a. The attenuation effects of the individual shield apertures acting as many stacked waveguides-below-cutoff (see Section 8.5.3.1).

b. Reflection losses, considering the geometry of the openings.

c. Area of the opening when the test antenna is far from the shield in comparison to the distance between holes in the shield.

d. Skin depth effects.

e. Coupling between closely spaced openings.

The shielding effectiveness, in decibels, is expressed as follows (8-8):

$$SE = A_a + R_a + C_a + K_1 + K_2 + K_3 \tag{8-12}$$

where, as with solid shields, A_a represents the absorption or attenuation term, R_a the reflection loss term, and C_a the multi-reflection correction term. The additional terms K_1, K_2, and K_3 approximate the effects of items c, d, and e above. Detailed expressions for the screen and perforated metal sheet shielding effectiveness terms are given as follows for single layer wire cloth or screening:

A_a = aperture attenuation in dB,

= 27.3 D/W for rectangular apertures, and (8-13)

= 32 D/d for circular apertures, (8-14)

where

D = depth of aperture in inches,

W = width of rectangular aperture in inches (measured perpendicular to the E-Vector),

d = diameter of circular aperture in inches,

R_a = aperture reflection loss in dB,

$$= 20 \log \left| \frac{(1 + k)^2}{4k} \right| \text{, and} \tag{8-15}$$

C_a = correction factor for aperture reflections (negligible when A_a is greater than 10 dB)

$$= 20 \log \left| 1 - \frac{(k - 1)^2}{(k + 1)^2} \times 10^{-A_a/10} \right| \tag{8-16}$$

In Equations 8-15 and 8-16,

k = ratio of aperture characteristic impedance to incident wave impedance, or

= W/3.142r for rectangular apertures and magnetic fields (8-17)

= d/3.682r for circular apertures and magnetic fields (8-18)

= jfW x 1.7 x 10^{-4} for rectangular apertures and radiated fields (8-19)

= jfd x 1.47 x 10^{-4} for circular apertures and radiated fields (8-20)

f = frequency in MHz

r = distance from signal source to shield in inches

j = $\sqrt{-1}$

K_1 = correction factor for number of openings per unit square (applicable when test antennas are far from the shield in comparison to distance between holes in the shield),

$$= 10 \log \frac{1}{a\,n} \tag{8-21}$$

where

a = area of each hole in square inches
n = number of holes per square inch

K_2 = correction factor for penetration of the conductor at low frequencies

$$= -20 \log \left(1 + \frac{35}{p^{2.3}}\right) \tag{8-22}$$

where

p = ratio of the wire diameter to skin depth, δ, where

$$\delta = \frac{6.61}{\sqrt{f}} \text{ in cm, or} \tag{8-23}$$

$$= \frac{2.60}{\sqrt{f}} \text{ in inches, f in Hz}$$

K_3 = correction factor for coupling between closely spaced shallow holes

$$= 20 \log \frac{1}{\tanh (A_a/8.686)} \tag{8-24}$$

As an example, determine the shielding effectiveness of a No. 22, 15 mil copper screen when subjected to a predominantly magnetic field from a loop source 1.75 inches away and operating at a frequency of 1 MHz. For such a screen, there are 22 meshes per linear inch; the center-of-wire to center-of-wire distance is 1/22 (0.045) inch and the opening width is smaller by an amount equal to the wire diameter, 0.015 inches. The depth of the apertures is assumed equal to the wire diameter.

Thus

A_a = (27.3)D/W = (27.3) (.015)/ (0.045 - 0.015)

= 13.65 dB

The impedance ratio for the magnetic wave and rectangular apertures is given by

k= W/πr = (0.045 - 0.015) / π(1.75)

= 0.00546

and the reflection term is

$$Ra = 20 \log \left|\frac{(1 + k)^2}{4k}\right| = 33.3 \text{ dB}$$

The multi-reflection correction term is

$$C_a = 20 \log \left| 1 - \frac{(k-1)^2}{(k+1)^2 \times 10^{A_a/10}} \right|$$

$$= -0.4 \text{ dB.}$$

The number of openings correction factor is

$$K_1 = 10 \log \frac{1}{an}$$

$$= 10 \log \frac{1}{(0.045 - 0.015)^2 (22)^2}$$

$$= 3.5 \text{ dB.}$$

The skin depth correction factor is

$$K_2 = -20 \log (1 + (35/\rho 203)).$$

$$\rho = \frac{0.015}{2.6 \times 10^{-3}} = 5.77$$

$$K_2 = -20 \log (1 + (35/56.3)) = -4.2 \text{ dB.}$$

Finally, the hole-coupling correction factor is given by

$$K_3 = 20 \log (l/\tanh (A_a/8.686))$$

$$= 0.8 \text{ dB.}$$

The screen's shielding effectiveness, SE, is the sum of the six factors:

$$SE = 13.5 + 33.2 - 0.4 + 3.5 - 4.2 + 0.8$$

$$= 46.4 \text{ dB.}$$

Figure 8-18 presents both calculated and measured values of shielding effectiveness for several types of copper screen located 1.75 inches from a loop antenna. Representative non-solid sheet shielding effectiveness measurements are shown in Tables 8-12 and 8-13. The two tables provide data on a variety of material forms, including meshes, perforated sheets, and cellular structures against low-impedance, high-impedance, and plane waves. Figures 8-19 and 8-20 illustrate how the effectiveness of perforated sheet material changes with changes in hole size and hole separation. Table 8-14 contains both calculated and measured values of shielding effectiveness for the No. 22, 15 mil copper screen of the example for magnetic, plane, and electric waves of several frequencies. The shielding effectiveness of the screen is seen to increase with the frequency for magnetic fields, to decrease with increasing frequency for plane waves, and to be largely independent of frequency for electric fields.

Screen shields should use a single or double layer of copper or brass mesh of No. 16 or 22 gauge wire with openings no greater than 1/16 inch. A mesh less than 18 by 18 (wires to the inch) should not be used. The mesh wire diameter should be a minimum of 0.025 inch (No. 22 AWG). If more than a nominal 50 dB of attenuation is required, the screening should have holes no larger than those in a 22 by 22 mesh made of 15 mil of copper wires. The attenuation of an electromagnetic wave by a mesh is considerably less than that afforded by a solid metal screen. The principal shielding action of a mesh is due to reflection. Tests have shown that mesh with 50 percent open area and 60 or more strands per wave length introduces a reflection loss very nearly equal to that of a solid sheet of the same material.

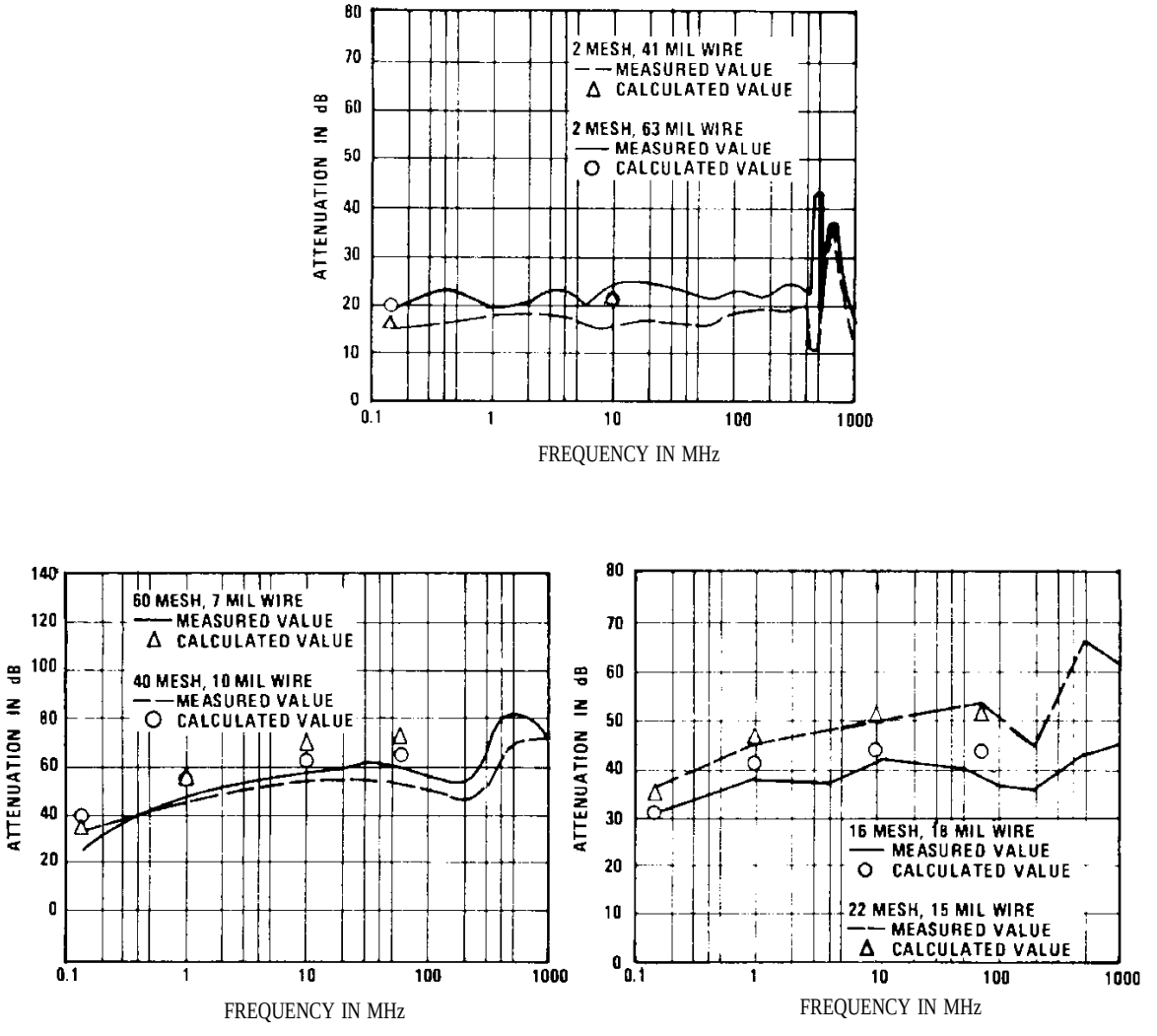

Figure 8-18. Measured and Calculated Shielding Effectiveness of Copper Screens to Low Impedance Fields (8-8)

Table 8-12

Effectiveness of Non-Solid Shielding Materials Against Low Impedance and Plane Waves [8-7]

Impinging Wave	Form: General	Form: Detail	Material	Thickness (mils)	Nominal Effectiveness (dB): 0.1 kHz	1 kHz	10 kHz	85 kHz	1 MHz	10 MHz
Low Impedance	Mesh (Screening)	2 layers 1 inch apart	Cu (oxidized)		2	6	18			
		No. 22	Cu					31	43	43
		No. 16	Bronze					18		
		No. 4	Galvanized Steel					10	17	21
Plane	Perforated Sheet	45 mil dia., 225 sq. inch	Al	20	3040 MHz: 60				9380 MHz: 62	
	Mesh (Screening)	No. 16	Al	dia. = 13	34				36	
		No. 22	Cu	dia. = 15	200 kHz: 118		1 MHz: 106		5 MHz: 100	100 MHz: 80

Table 8-13

Effectiveness of Non-Solid Shielding Materials Against High Impedance Waves [8-3]

Form: General	Form: Detailed	Material	Thickness (mils)	Nominal Effectiveness (14 kHz to 1000 MHz) (dB)	Open Area %	Air-Flow Static Pressure (inches of water): 200 cu ft/min	Air-Flow Static Pressure (inches of water): 400 cu ft/min
Hexcell	1/4-inch cell, 1 inch thick	Al	3	>90		0.06	.26
TV Shadow Mask (Photo-Etched)	9-mil holes, 28-mil centers	95% Cu	7	>90	12	>2	
		5%			50	0.2	0.4
		100%	3	>90	50	0.2	0.5
Lektromesh	40 count	Cu-Ni	7	>90	36	0.4	1.7
	25 count		5	78	49	0.2	0.5
	40 count	Cu	3	78	57	0.2	0.5
	25 count				56	0.2	0.4
Perforated Sheet	1/8-inch dia, 3/16-inch	Steel Steel	60	58		0.27	>0.6
	1/4-inch dia, 5/16-inch centers	Al	60	48	46		
	7/16-inch dia, 5/8-inch centers		37	35	45		
Mesh	No. 16	Al	20 (dia)	55	36		
(Screening)	16 x 16/sq in.						
	No. 22	Cu		65 (14 kHz to 60 MHz)			
	No. 12		20 (dia)	50	50		
	No. 16	Bronze		45 (14 kHz to 60 MHz)			
	No. 10	Monel	18 (dia)	40			
	No. 4	Galvanized Steel	30 (dia)	35	76		
	No. 2			28 (14 kHz to 40 MHz) 24	88		

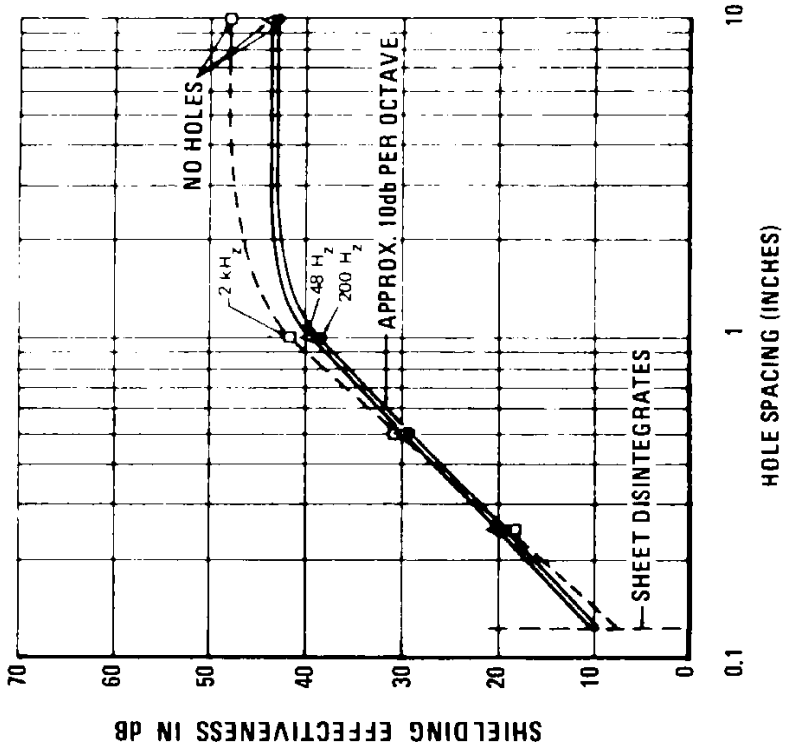

Figure 8-20. Shielding Effectiveness of a Perforated Metal Sheet as a Function of Hole Spacing (8-6)

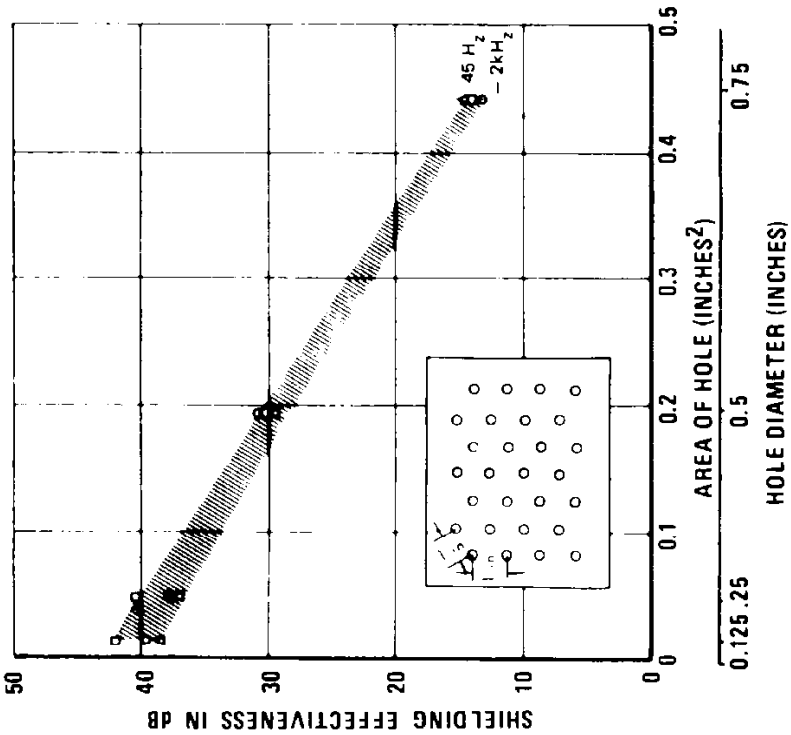

Figure 8-19. Shielding Effectiveness of a Perforated Metal Sheet as a Function of Hole Size (8-6)

Table 8-14

Comparison of Measured and Calculated Values
of Shielding Effectiveness for No. 22, 15 Mil Copper Screens (8-8)

Test Type	Frequency (MHz)	Measured Effectiveness (dB)	Calculated Effectiveness (dB)
Magnetic field (r = 1.75")	0.085	31	29
	1.000	43	46
	10.000	43	49
Plane Wave	0.200	118	124
	1.000	106	110
	5.000	100	95
	100.000	80	70
Electric field	0.014	65	**65

**The value assumes a wave impedance equal to that of a 30-inch square waveguide.

The mesh construction should have individual strands permanently joined at points of intersection by a fusing process so that a permanent electrical contact is made and oxidation does not reduce shielding effectiveness. A screen of this construction will be very effective for shielding against electric (high-impedance) fields at low frequencies because the losses will be primarily caused by reflection. Installation can be made by connecting a screen around the periphery of an opening.

8.5 SHIELD DISCONTINUITY EFFECTS (APERTURES).

An ideal shielded enclosure would be one of seamless construction with no openings or discontinuities. However, personnel, powerlines, control cables, and/or ventilation ducts must have access to any practical enclosure. The design and construction of these discontinuities become very critical in order to incorporate them without appreciably reducing the shielding effectiveness of the enclosures. Since most mechanically suitable metal enclosures will give enough shielding above 1 MHz, EMI leakage above 1 MHz is due primarily to discontinuities. EMI leakage (the amount of EM energy that will leak from a discontinuity) depends mainly on:

a. maximum length (not area) of the opening,

b. the wave impedance, and

c. the wavelength of the EM energy.

Maximum length rather than width of an opening is important because the voltage will be highest wherever the "detour" for the currents is longest. This is at the center of the slot and the voltage increases as the length of the slot increases. The width has almost no effect on "detour" length and as a consequence has little effect on the voltage.

Wavelength controls how much the "slot antenna" radiates. If the slot happens to be 1/4 wavelength or longer, it will be a very efficient radiator; if it is less than 1/100 wavelength, it will be a rather inefficient radiator. Therefore, slots only .001" to .005" wide but 1/100 wavelength or more long can be responsible for large leaks. Figure 8-21 shows wavelength and 1/100 wavelength vs frequency for 0"-6" slot lengths typical in normal metal enclosures. Combinations of frequency and slot lengths to the right of the 1/100 wavelength line would tend to be leaky. This figure shows why discontinuities in shields, even if very narrow but a few inches long, will severely reduce the shielding capacity of an enclosure above 100 MHz.

Some types of discontinuities commonly encountered include:

a. Seams between two metal surfaces, with the surfaces in intimate contact (such as two sheets of material that are riveted or screwed together),

b. Seams or openings between two metal surfaces that may be joined using a metallic gasket, and

c. Holes for ventilation or for exit or entry of wire, cable, light, film, water, meter faces, etc.

8.5.1 Seams Without Gaskets.

Seams or openings in enclosure or compartment walls that are properly bonded will provide a low impedance to rf currents flowing across the seam. When good shielding characteristics are to be maintained, permanent mating surfaces of metallic members within an enclosure should be bonded together by welding, brazing, sweating, swagging, or other metal flow processes. To insure adequate and properly implemented bonding techniques, the following recommendations should be observed:

a. All mating surfaces must be cleaned before bonding.

b. All protective coatings having a conductivity less than that of the metals being bonded must be removed from the contact areas of the two mating surfaces before the bond connection is made.

c. When protective coatings are necessary, they should be so designed that they can be easily removed from mating surfaces prior to bonding. Since the mating of bare metal to bare metal is essential for a satisfactory bond, a conflict may arise between the bonding and finish specifications. From the viewpoint of shielding effectiveness, it is preferable to remove the finish where a compromise of the bonding effectiveness would occur.

d. Certain protective metal platings such as cadmium, tin, or silver need not in general be removed. Similarly, low-impedance corrosion-resistant finishes suitable for aluminum alloys, such as alodine, iridite, oakite, turco and bonder rite, may be retained. Most other coatings, such as anodizing, are nonconductive and should be removed. See Figure 8-22 for shielding effectiveness degradation data on selected surface finishes.

e. Mating surfaces should be bonded immediately after protective coatings are removed to avoid oxidation. Refinishing after bonding is acceptable from the standpoint of shielding effectiveness.

f. When two dissimilar metals must be bonded, metals that are close to one another in the electrochemical series should be selected in order to reduce corrosion.

g. Soldering may be used to fill the resulting seam, but should not be employed to provide bond strength.

h. The most desirable bond is achieved through a continuous butt or lap weld. Spot welding is less desirable because of the tendency for buckling, and the possibility of corrosion occurring between welds. Riveting or pinning is even less desirable because of the greater susceptibility of bond degradation with wear.

i. An overlap seam, accompanied by soldering or spot welding, provides a relatively effective bond. Other types of crimped seams may be employed so long as the crimping pressure is uniformly maintained.

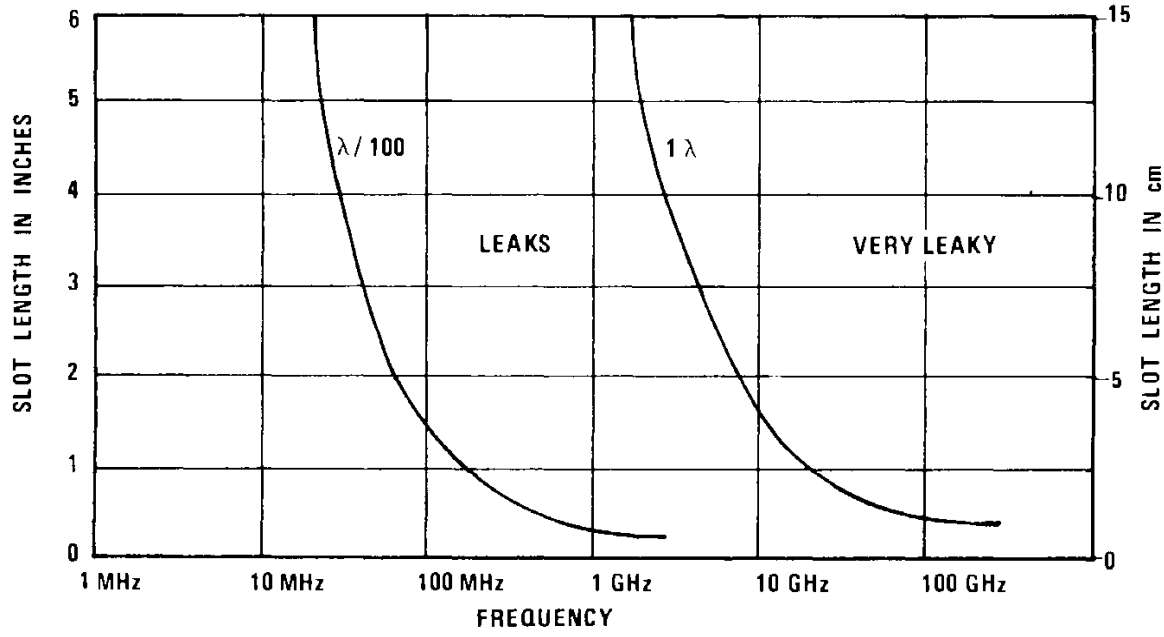

Figure 8-21. Slot Radiation (Leakage) (8-9)

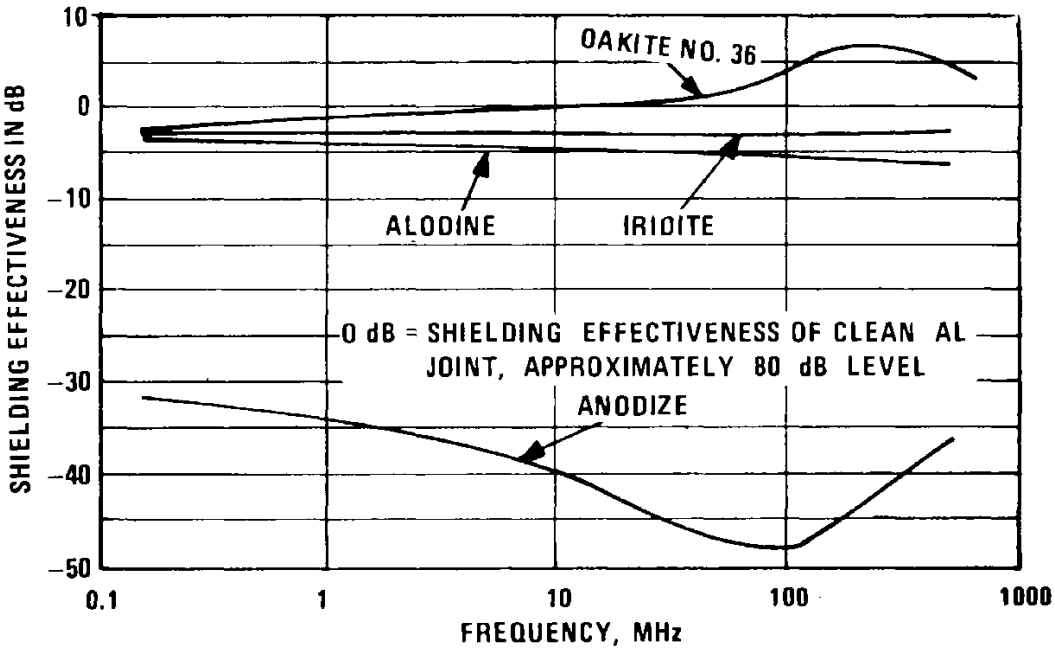

Figure 8-22. Shielding Effectiveness Degradation Caused by Surface Finishes on Aluminum (8-4)

There are often occasions when good temporary bonds must be obtained. Bolts, screws, or various types of clamp and slide fasteners have been used for this purpose. The same general requirements of clean and intimate contact of mating surfaces, and minimized electrolytic (cathodic) effects apply to temporary bonds as well. Positive locking mechanisms that ensure consistent contact pressure over an extended period of time should be used.

Bolts, nuts, screws, and washers that must be manufactured with material different from the surfaces to be bonded should be higher in the electromotive series than the surfaces themselves so that any material migration erodes replaceable components.

A critical factor in temporary bonds (and in spot-welded permanent bonds as well) is the linear spacing of the fasteners or spot welds. Figure 8-23 provides an indication of the sensitivity of this parameter for a 1.27 cm (1/2-inch) aluminum lap joint at 200 MHz. The shielding effectiveness shown in 2.54 cm (l-inch) spacing is about 12 dB poorer than an identical configuration incorporating a 1.27 cm (1/2-inch) wide monel mesh gasket; the effectiveness at 25.4 cm (l0-inch) spacing is about 30 dB poorer than that with the same gasket. Use of conductive gaskets for this and other applications is discussed in the next section.

Similar techniques to those just described can be employed in connection with seams in magnetic materials. Permanent seams can be butt or lap, continuous or spot welded using an electric arc in an argon or helium

atmosphere, recognizing that a final material heat treatment will be necessary. Temporary seams are usually screwed or bolted together. Figures 8-24 and 8-25 indicate the change in shielding effectiveness of an AMPB-65 seam at various frequencies as a function of screw spacing and lap joint width, respectively.

8.5.2 Seams With Gaskets.

Considerable shielding improvement over direct metal-to-metal mating of shields used as temporary bonds can be obtained using flexible, resilient metallic gaskets placed between shielding surfaces to be joined. Clean metal-to-metal mating surfaces and a good pressure contact are necessary.

The major material requirements for rf gaskets include compatibility with the mating surfaces, corrosion resistance, appropriate electrical properties, resilience (particularly when repeated compression and decompression of the gasket is expected), mechanical wear, and ability to form into the desired shape. On this basis, monel and silver–plated brass are generally the preferred materials, with aluminum used only for gasketing between two aluminum surfaces. Beryllium-copper contact fingers are also employed, with a variety of platings available, if desired. Mumetal and Permalloy have been used when magnetic shielding effectiveness is of concern.

Gaskets are manufactured with rubber or neoprene to provide both fluid and conductive seals, or to sustain a pressure differential, as well as provide an rf barrier. They are also made using sponge silicon for high temperature applications and are made with both nonconductive or conductive pressure sensitive adhesives. A few of the gasket design approaches that have been employed are summarized in Table 8-15. Typical gasket mounting techniques are given in Figure 8-6. The most frequently used gasket configuration is the knitted wire mesh; the structure of this mesh is shown in Figure 8-27.

The necessary gasket thickness is dependent on the unevenness of the joint to be sealed, the compressibility of the gasket, and the force available. The shape required depends on the particular application involved, as well as the space available, the manner in which the gasket is held in place, and the same parameters that influence gasket thickness. Gaskets may be held in place by sidewall friction, by soldering, by adhesives, or by positioning in a slot or on a shoulder. Soldering must be controlled carefully to prevent its soaking into the gasket and destroying gasket resiliency. Adhesives (particularly nonconductive adhesives) should not be applied to gasket surfaces that mate for rf shielding purposes; auxiliary tabs should be used. A recommended pressure is about 20 psi.

8.5.3 Penetration Holes. One effective method of neutralizing the shielding discontinuities created by planned holes (e.g., for air ventilation and circuit adjustment) in a shield is to use cylindrical and rectangular waveguide-below-cutoff slots or tubes.

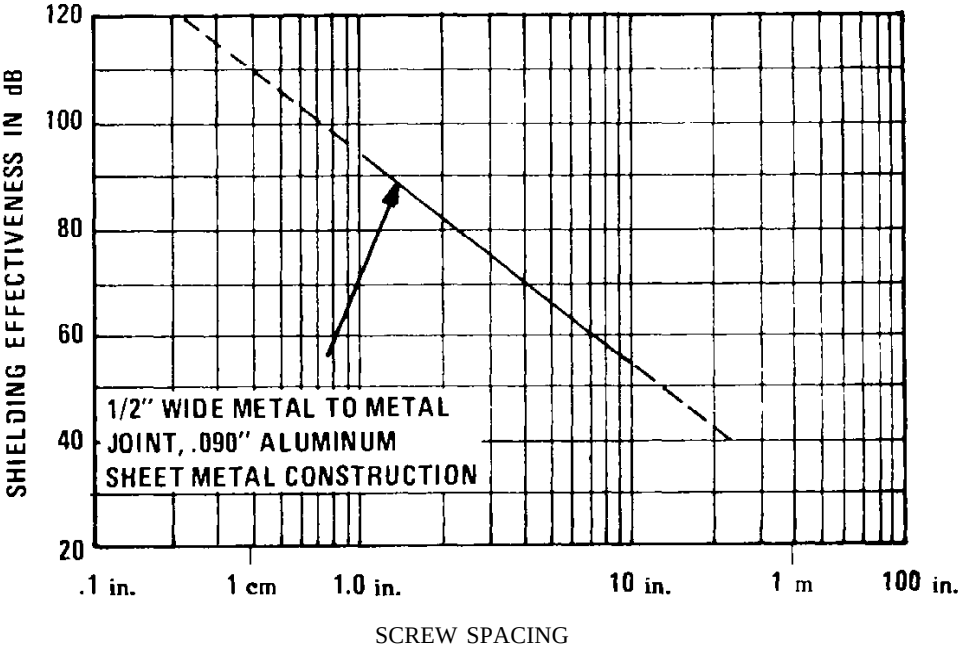

Figure 8-23. Influence of Screw Spacing on Shielding Effectiveness

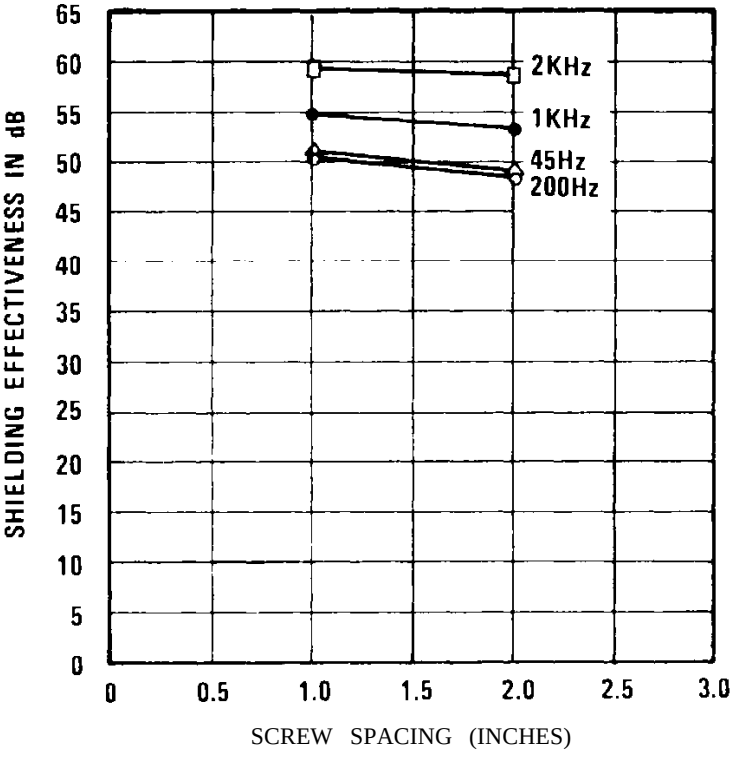

Figure 8-24. Shielding Effectiveness of AMPB-65 Overlap as a Function of Screw Spacing Along Two Rows, 1.5 Inches Apart (8-6)

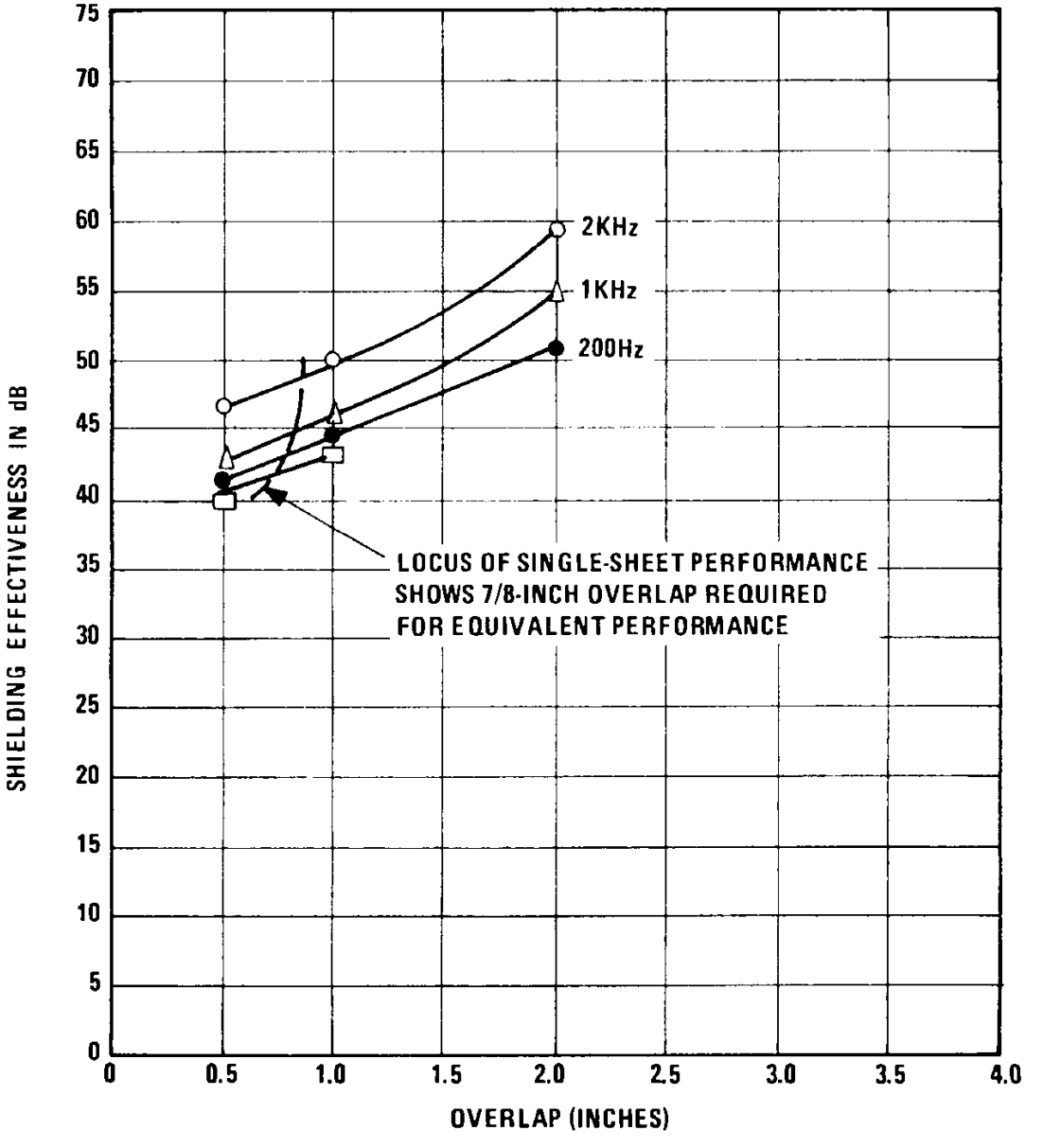

Figure 8-25. Shielding Effectiveness of an AMPB-65 Joint as a Function of Overlap (8-6)

Table 8-15

Characteristics of Conductive Casketing Materials

Material	Chief Advantages	Chief Limitations
Compressed knitted wire	Most resilient all-metal gasket (low flange pressure required). Most points of contact. Available in variety of thicknesses and resiliencies, and in combination with neoprene and silicon.	Not available in sheet (Certain intricate shapes difficult to make). Must be 0.40 inch or thicker.
Brass or beryllium copper with punctured holes	Best break-thru of corrosion protection films.	Not truly resilient nor generally reusable.
Oriented wires in rubber or silicon	Combines fluid and rf seal. Can be effective against corrosion films if ends of wires are sharp.	May result in larger size gasket for same effectiveness.
Aluminum screen impregnated with neoprene	Combines fluid and conductive seal. Thinnest gasket. Can be cut to intricate shapes.	Very low resiliency (high flange pressure required).
Soft Metals	Cheapest in small sizes.	Cold flows, low resiliency.
Metal over rubber	Takes advantage of the resiliency of rubber.	Foil cracks or shifts position. Generally low insertion loss yielding poor rf properties.
Conductive rubber	Combines fluid and conductive seal.	Practically no insertion loss, giving very poor rf properties.
Contact Fingers	Best suited for sliding contact.	Easily damaged. Few points of contacts.

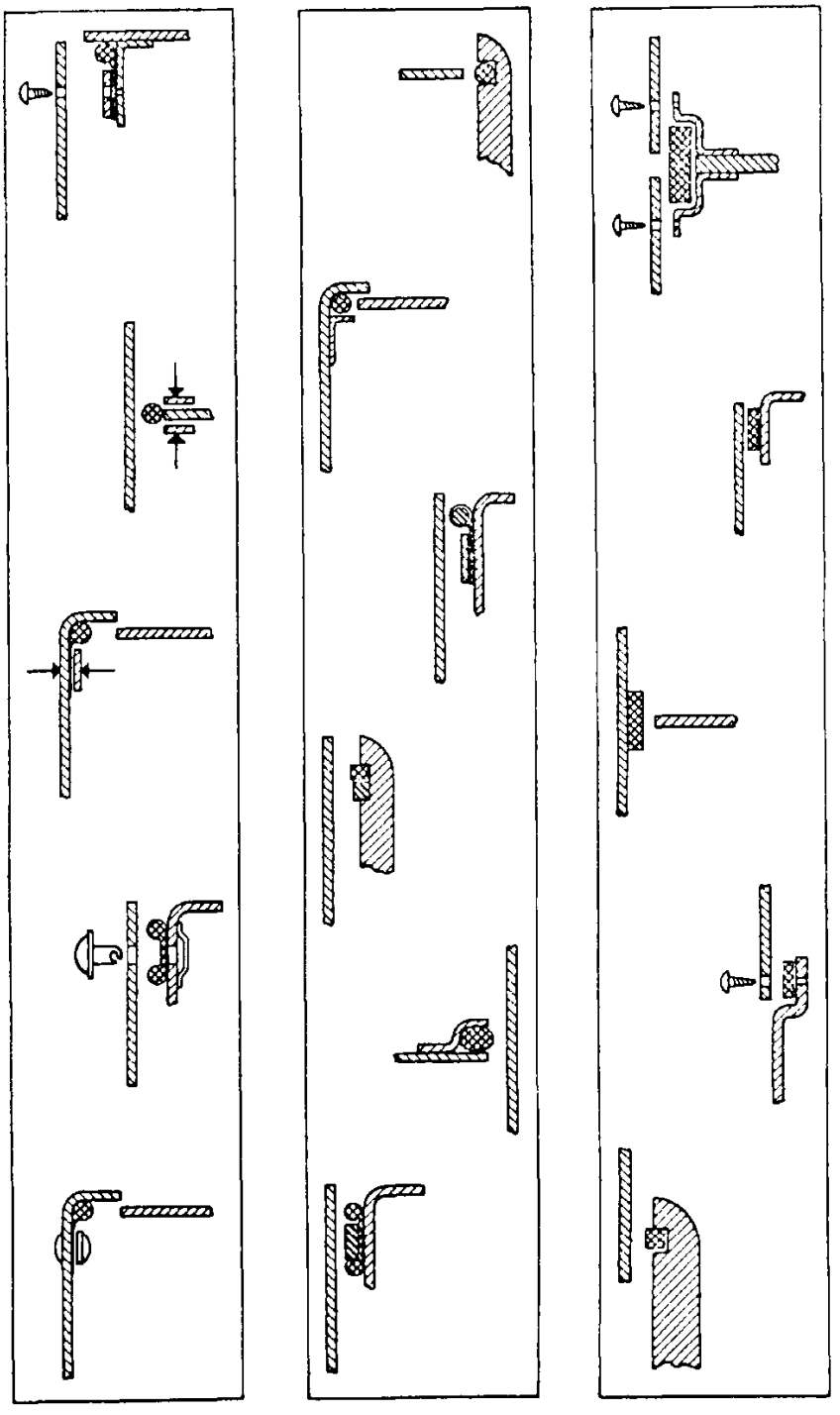

Figure 8-26. Typical Mounting Techniques for RF Gaskets

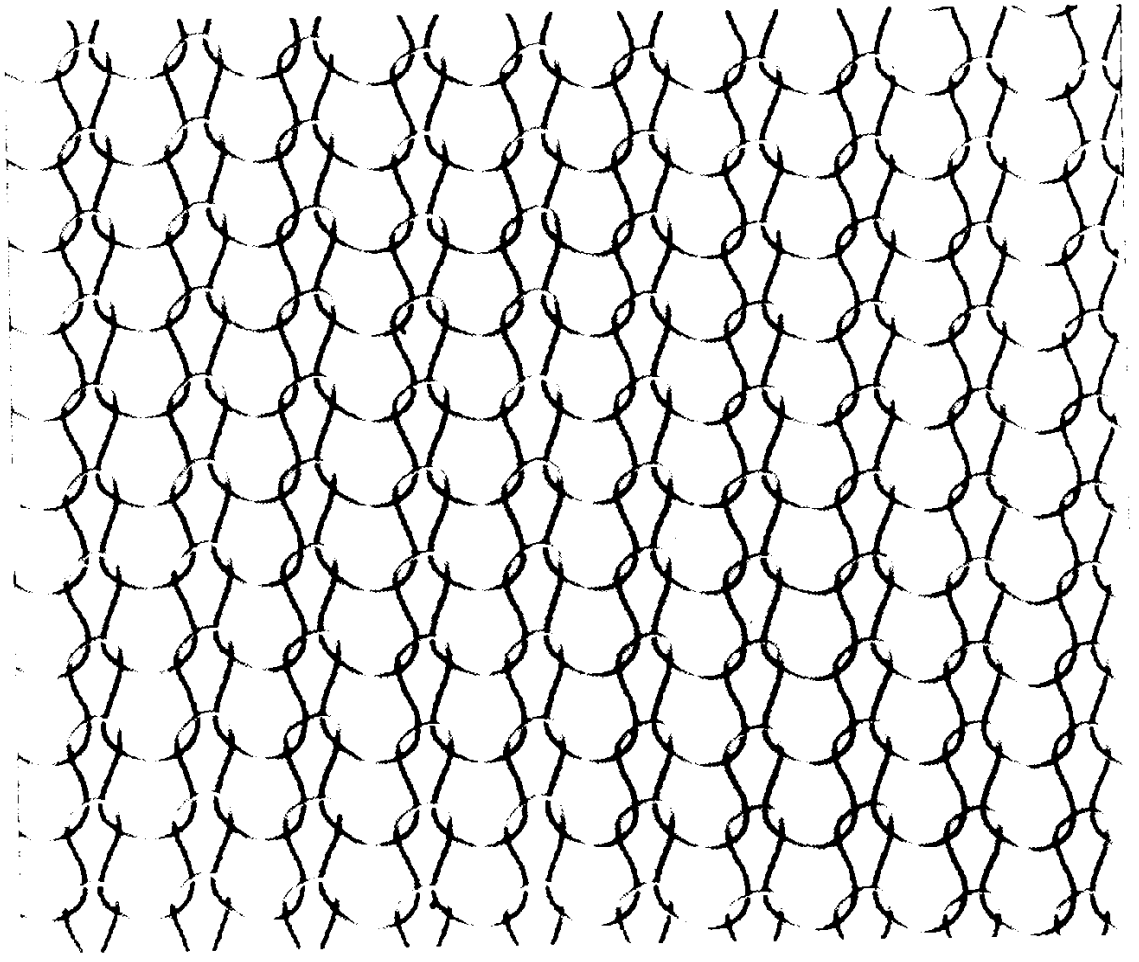

Figure 8-27. Enlarged View of Knitted Wire Mesh

8.5.3.1 Waveguide-Below-Cutoff.

A properly designed waveguide-below-cutoff opening will act like a high-pass filter. The cutoff frequency is a function of the cross-section of the waveguide. For a cylindrical waveguide, the cutoff frequency of the dominant TE mode is

$$f_c = \frac{6.92}{d} \text{ GHz.} \tag{8-25}$$

The cutoff frequency for the TE mode of rectangular waveguide is

$$f_c = \frac{5.90}{b} \text{ GHz.} \tag{8-26}$$

In these equations,

f_c = cutoff frequency for the dominant mode in gigahertz,

d = inside diameter of a cylindrical waveguide in inches, and

b = greatest dimension of rectangular waveguide in inches.

At any frequency, f_a, considerably less than cutoff (i.e., $f_a < 0.1f_c$), the attenuation, a, in dB per inch for cylindrical waveguides is approximated by the relation

$$\alpha \simeq \frac{32}{d} \tag{8-27}$$

For rectangular waveguides, the attenuation, α, in dB per inch is

$$\alpha \simeq \frac{27.3}{b} \tag{8-28}$$

The equations given above are valid for air-filled waveguides with length-to-width or length-to-diameter ratios of 3 or more.

In many cases, shielding screens introduce excessive air resistance (See Vol II) and may provide inadequate shielding effectiveness. In such cases, openings may be covered with specially designed ventilation panels (such as honeycomb) with openings that operate on the waveguide-below-cutoff principle. The shielding effectiveness of honeycomb panels is a function of the size and length of the waveguide and the number of waveguides in the panel. Table 8-16 indicates the shielding effectiveness of a honeycomb panel constructed of steel with l/8-inch hexagonal openings l/2-inch long.

Table 8-16

Shielding Effectiveness of Hexagonal Honeycomb Made of Steel
with l/8-inch Openings l/2-Inch Long (8-10)

Frequency (MHz)	Shielding Effectiveness (dB)
0.1	45
50.0	51
100.0	57
500.0	56
2,200.0	47

Honeycomb-type ventilation panels in place of screening:

a. allow higher attenuation that can be obtained with mesh screening over a specified frequency range,

b. allow more air to flow with less pressure drop for the same diameter opening,

c. cannot be damaged as easily as the mesh screen and are therefore more reliable, and

d. are less subject to deterioration by oxidation and exposure.

All non-solid shielding materials, such as perforated metal, fine mesh copper screening, and metal honeycomb, present an impedance to air flow. Metal honeycomb is the best of these materials because it enables very high electric field attenuations to be obtained through the microwave band with negligible drops in air pressure (see Volume II). However, honeycomb has the disadvantages of occupying greater volume and costing more than screening or perforated metal. Further, it is often difficult to install honeycomb paneling because flush mounting is required. Thus, screening and perforated sheet stock sometimes find application for purely physical design reasons, although honeycomb panels can achieve attenuations greater than 100 dB for frequencies below 10 MHz.

The waveguide attenuator is also of considerable value where control shafts must extend through an enclosure. By making use of an insulated control shaft passing through the waveguide attenuator, the control function can be accomplished with little likelihood of radiation. However, where a metallic control shaft is required, it must be grounded to the case by a close-fitting gasket or metallic fingers.

Fuseholders, phone jacks, panel connectors not in use, and other receptacles can be fitted with a metallic cap that provides an electrically continuous cover and maintains case integrity.

The waveguide attenuator approach may also be considered where holes must be drilled in the enclosure. If the metal thickness is sufficient to provide a “tunnel” with adequate length, a waveguide attenuator is effectively produced. For example, a metal wall 0.5 cm (3/16-inch) thick would permit a 0.16 cm (1/16-inch) hole to be used without excessive leakage. This technique definitely should be considered where it is necessary to confine extremely intense interference sources.

8.5.3.2 Screen and Conducting Glass.

Often it is necessary to provide rf shielding over pilot lights, meter faces, strip chart recorders, oscilloscopes, or similar devices that must be observed by the equipment user. The alternatives available include:

a. Use of a waveguide attenuator,

b. Use of screening material,

c. Providing a shield behind the assembly of concern, and filtering all leads to the assembly, or

d. Use of conducting glass.

A waveguide attenuator is a practical approach for rf shielding of lamps. The technique has the advantage of not introducing light transmission loss. However, it is not particularly suitable for most meter openings or larger apertures because of the space requirements involved.

Use of screens over meter faces and other large apertures has often been employed for shielding purposes. A typical screen introduces a minimum of 15%-20% optical loss which can create difficulties in reading meters. If the device being shielded has a scale (such as an oscilloscope graticule), bothersome zoning patterns can result. However, these potential deficiencies are counterbalanced by good shielding efficiencies at a fairly low cost.

Glass coated with conducting material such as silver can provide shielding across viewing surfaces with some loss in light transmission. Conductive glass is commercially available from a number of glass manufacturers.

Figure 8-28 provides shielding effectiveness data on 50 and 200 ohms per square silver-impregnated glass against electric arc discharges. Figure 8-29 indicates shielding effectiveness as a function of surface resistance for plane waves in the frequency range from 0.25 to 350 MHz. The light transmission characteristics of this type of glass as a function of surface resistance is presented in Figure 8-30. For effective shielding, good contact to the conducting surface of the glass must be maintained around its periphery.

8.6 SELECTION OF SHIELDING MATERIALS.

The selection of the material should be based on its ability to drain off induced electrical charges and to carry sufficient out-of-phase currents to cancel the effects of the interfering field. The inherent characteristics of the metal to consider are its relative conductivity, g_r, and its relative permeability, μ_r. The thickness of the shield and the frequency of the signal to be attenuated are also important.

The selection of proper materials for shielding should be made in accordance with the following basic rules:

a. At low frequencies (LF), only magnetic materials can furnish appreciable shielding against magnetic fields.

b. For a given material, magnetic fields require a greater shield thickness than do electric fields.

c. At higher frequencies, smaller shield thickness is required for a given material.

d. At sufficiently high frequencies, nonferrous materials such as copper and aluminum will give adequate shielding for either electric or magnetic fields.

e. The electric field component for frequencies from 60 to 800 Hz (i.e., ac power) can readily be shielded with thin sheets of conducting materials such as iron, copper, aluminum, and brass.

For a detailed description of the procedure for selecting a shield material for a facility, see Volume II. Care must be used when adding a shield to a subsystem. For example, a shield placed too close to a circuit in which the circuit Q is a critical factor can cause degradation of performance because the losses in the shield will appear as an effective resistance in the critical circuit, thereby lowering the circuit Q.

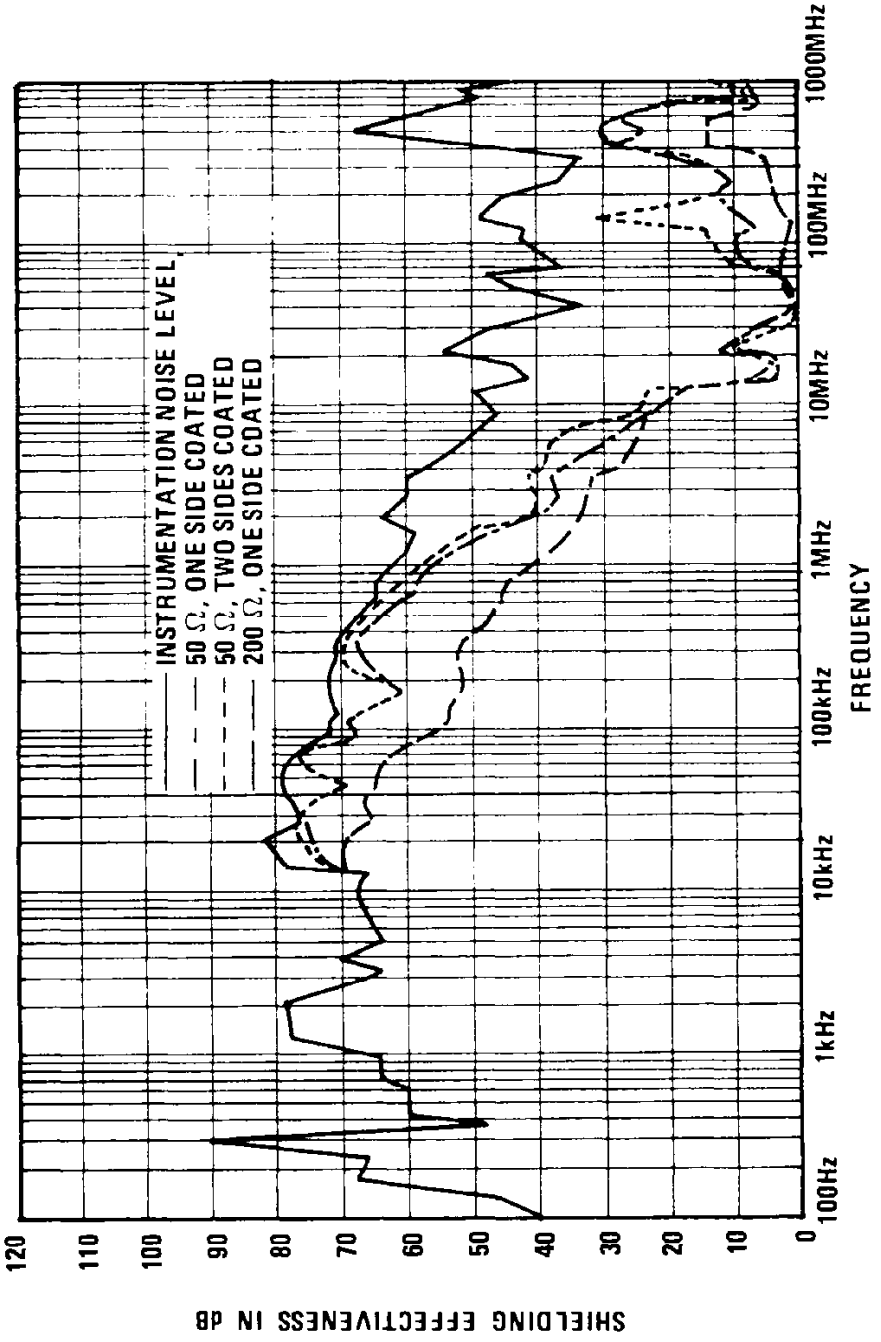

Figure 8-28. Shielding Effectiveness of Conductive Glass to High Impedance Waves (8-11)

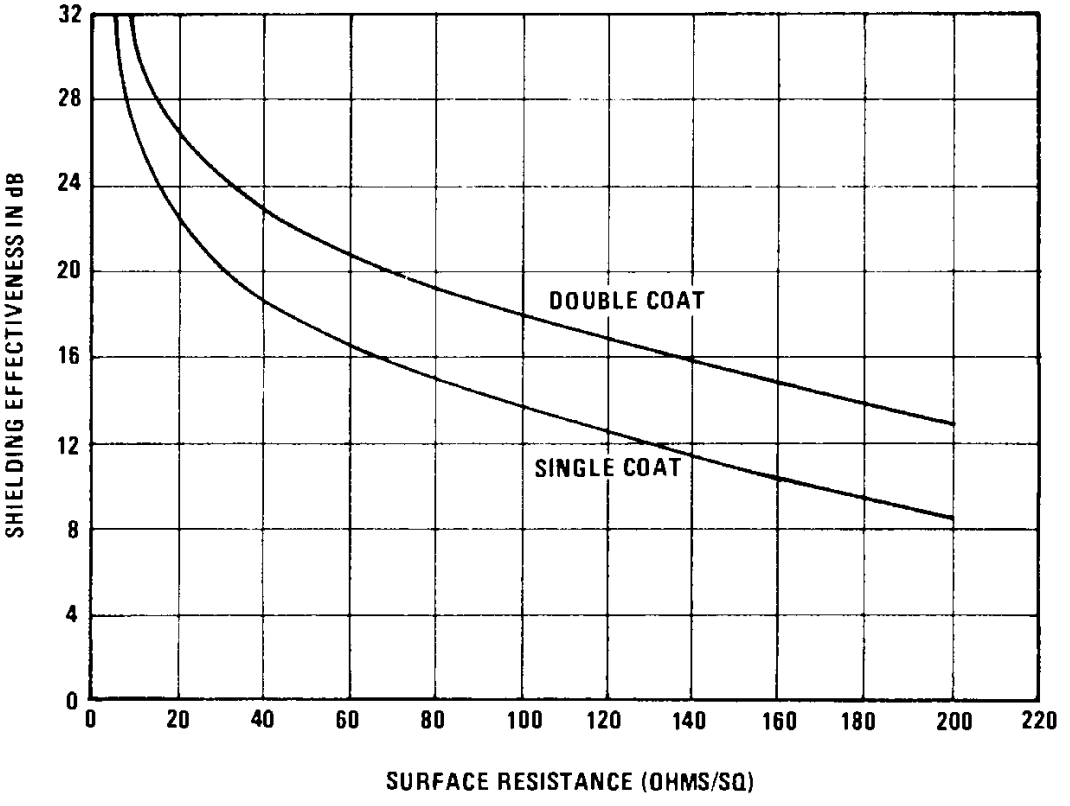

Figure 8-29. Shielding Effectiveness of Conductive Glass to Plane Waves [8-ii)

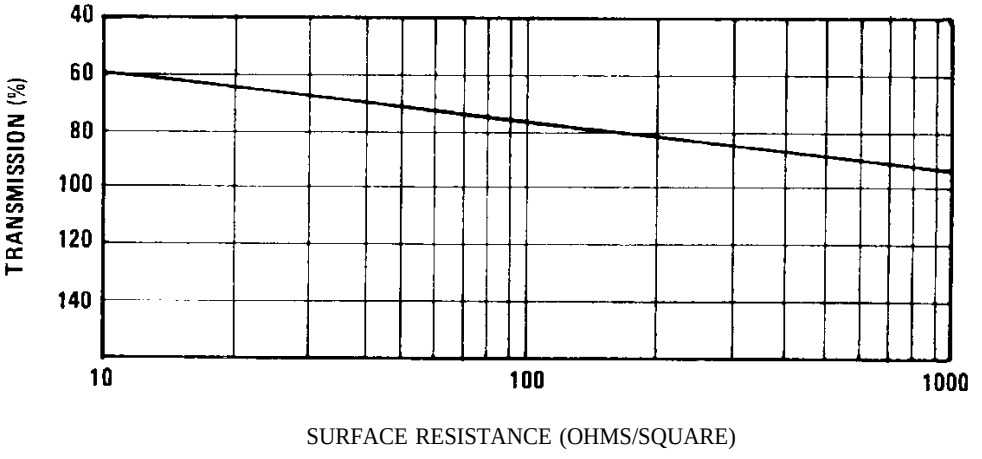

Figure 8-30. Light Transmission Versus Surface Resistance for Conductive Glass (8-7)

8.7 USE OF CONVENTIONAL BUILDING MATERIALS. Conventional building materials are not normally selected on the basis of their electromagnetic shielding properties however most materials do provide some limited degree of shielding. Some documented evidence of the shielding provided by common construction materials is available (8-12). Though the data is sketchy, enough does exist to give a preliminary indication of what can be expected from a building made of various materials.

8.7.1 Concrete. Figure 8-31 shows that the shielding effectiveness of ordinary concrete is very low. (It may be assumed that the properties of brick are similar to concrete.) The addition of coke and other forms of carbon to concrete can greatly enhance shielding properties. Approximately 30 dB shielding effectiveness from 1 GHz to 10 GHz can be achieved by using concrete and carbon. A concrete-coke aggregate apparently can provide shielding in excess of 30 dB above about 20 MHz and can offer more than 100 dB above 300 MHz.

8.7.2 Reinforcing Steel (Rebar).

Limited shielding to low frequency fields can be provided by the reinforcing steel or wire mesh in concrete. For maximum shielding, the conductors must be welded at all joints and intersections to form many continuous conducting loops or paths around the volume to be shielded. The degree of shielding will depend on the following parameters:

a. The size and shape of the volume to be shielded.

b. The diameter of the bars and spacing (the distance between bar centers).

c. The electrical and magnetic characteristics of the reinforcement steeI materials (conductivity and relative permeability).

d. The frequency of the incident wave.

The family of curves shown in Figure 8-32 describes the attenuation at approximately 10 kHz for an enclosure whose height is 4.5 meters (15 feet), and other dimensions vary over a 5 to 1 range. Bar diameters are 4.30 cm (1.692 inches) with a spacing of 35.56 cm (14 inches) on centers. The room dimensions, bar spacing, and diameters shown in Figure 8-32 are typical and cover most situations encountered in practice. The values of attenuation indicated are those obtainable at the center of the room. There will be less shielding near the edges of the room. For more detailed design information on the use of reinforcing bars as shields, consult Reference 8-13.

Welded wire fabric imbedded in the walls of a room or building can provide effective shielding if the individual wires of the fabric are joined to form a continuous electrical loop around the perimeter of the area to be shielded, At each seam where the mesh meets, each wire must be welded or brazed to the corresponding wire, or the meshes may be connected by a continuous strap. Additional attenuation may be obtained by use of a double layer of welded wire fabric separated by the thickness of a regular wall.

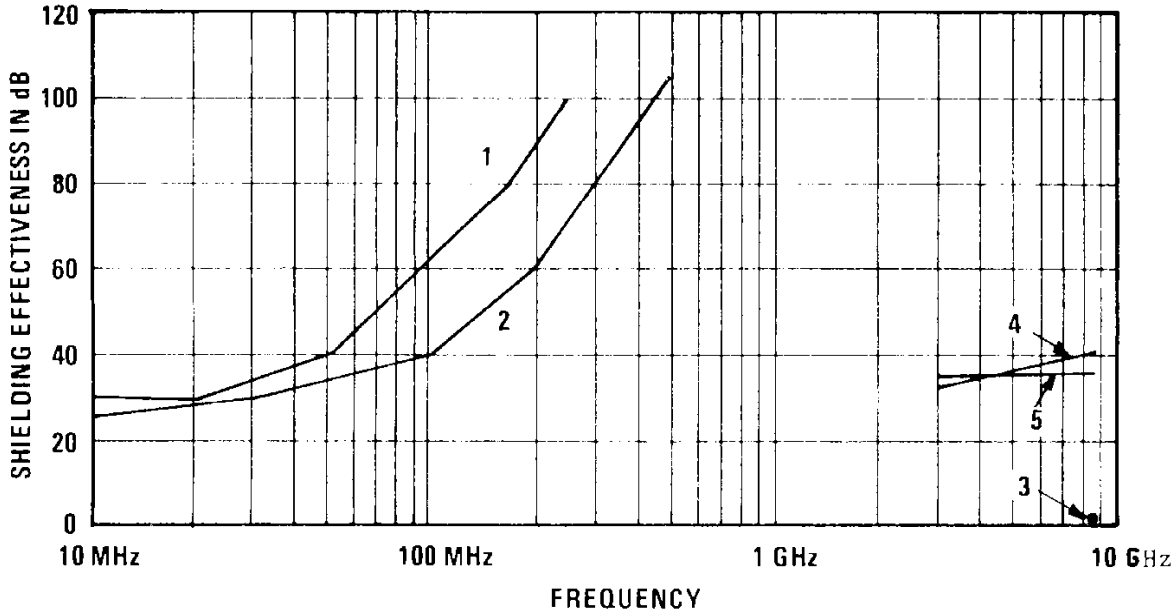

LEGEND			
CURVE NO.	PHYSICAL CONFIGURATION	TYPE	THICKNESS (MILS)
1	CYLINDER 6″ DIA. x 6″ LG.	CONCRETE COKE AGGREGATE (NEW)	– –
2	″ ″ ″	(2 MONTHS OLD)	– –
3	– – –	PLAIN CONCRETE	1000
4	– – –	CONCRETE, 5% CARBON	1000
5	BLOCK 16″ x 8″ x 8″	CONCRETE, IMPREGNATED W/CARBON LATEX	

Figure 8-31. Shielding Effectiveness of Some Building Materials (8-12)

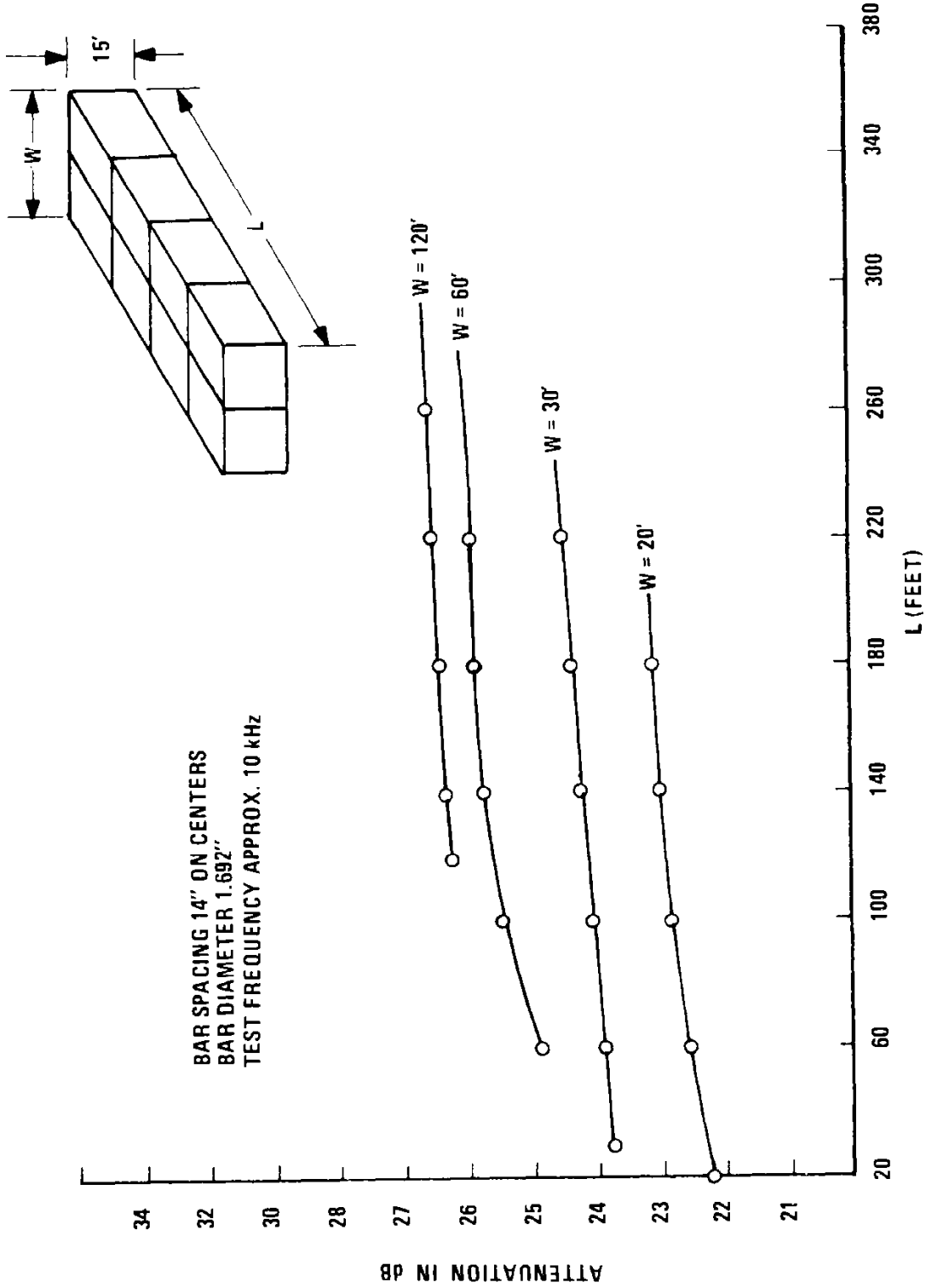

Figure 8-32. Center Area Attenuation of Induced Voltage by 15 Foot High Single-Course Reinforcing Steel Room (8-13)

8.8 CABLE AND CONNECTOR SHIELDING. Electromagnetic shielding is required not only for equipment containers but also for many of the cables which connect the equipment units since interference may be transferred from one circuit or location to another by interconnecting cable. The interference may be radiated from a cable or transferred into a cable from external fields. Once interference has been transferred by radiation or common-impedance circuit elements into a cable circuit of an electronic or electrical complex, it can be conducted through interconnecting cables to the other elements of the complex. Because of cable proximity in cable runs or elsewhere, intra- and/or inter-cable crosstalk may occur as a result of electromagnetic transference between cables.

8.8.1 Cable Shields.

The effectiveness of a cable shield is a function of two basic interference mechanisms: (1) EM wave shielding effectiveness and (2) surface transfer impedance, Z_t. As with other shields, the EM wave shielding effectiveness results from attenuation and reflections and is dependent upon such factors as the type and thickness of the material used and the number and size of openings in the shield. In addition, cable shields frequently are connected in such a manner as to carry relatively large currents themselves. Although the Interfering currents generally flow on the outer surfaces of the shields (skin depth effects), an electric field and resulting axial voltage gradient is developed along the inner (shielded) conductor (see Figure 8-33). The ratio of the induced conductor-to-shield voltage per unit length to the shield current is defined as the surface transfer impedance, Z_t.

The effectiveness of a shield is a function of the conductivity of the metal, contact resistance between strands in the braid, angle and type of weave, strand sizes, percentage of coverage, and size of openings. Analytical expressions which define Z_t in terms of these parameters are available (8-14). For uniform current distribution along a cable shield, the resulting Z_t can be used to predict the shield effectiveness of the cable knowing the terminating impedances of the cable. Typically, the cable is several wavelengths long at the frequency of the impinging field. Thus, the current distribution on the cable sheath varies with length and is a function of its orientation to the incident wave and to the surroundings. Since the current distribution will be essentially unpredictable for other than very specialized conditions, the ability to predict shielding effectiveness of the cable shield through the use of Z_t is severely limited.

There are several methods for shielding cables. These include: (a) braid, (b) flexible conduit, (c) rigid conduit, and (d) spirally-wound shields of high permeability materials. The principal types of shielded cables that are available include shielded single wire, shielded multi-conductor, shielded twisted pair, and coaxial. Cables are also available in both single and multiple shields in many different forms and with a variety of physical characteristics. The general properties of five classes of cable shields are given in Table 8-17.

Braid, consisting of woven or perforated material, is used for cable shielding in applications where the shield cannot be made of solid material. Advantages are ease of handling in cable makeup and lightness in weight. However, it must be remembered that for radiated fields the shielding effectiveness of woven or braided materials decreases with increasing frequency and increases with the density of the weave (9-14). The relative shielding effectiveness of single and double braided cables as a function of frequency is shown in Figure 8-34.

Table 8-17

Comparison of Cable Shields

	Single + Layer Braid	Multiple + Layered Braid	Foil ++	Conduit ++	Flexible Conduit
Shield Effectiveness* (Audio Frequency)	Good	Good	Exe.	Exe.	Good
Shield Effectiveness* (Radio Frequency)	Good	Exe.	Exe.	Exe.	Poor
Normal Coverage	60-95%	95-97%	100%	100%	90-97%
Fatigue Life	Good	Good	Fair	Poor	Fair
Tensile Strength	Exe.	Exe.	Poor	Exe.	Fair

*Poor < 20 dB; Fair, 20-40 dB; Good, 40-60 dB; Exe. > 60dB.
+Effectiveness against magnetic fields is poor.
++For effective magnetic shield, high permeability material must be used.

Conduit either solid or flexible, or zippered tubing may also be used to shield system cables and wiring from the rf environment. The shielding effectiveness of solid conduit is the same, for rf purposes, as that of a solid sheet of the same thickness and material. Linked armor or flexible conduit may provide effective shielding at lower frequencies, but at higher frequencies the openings between individual links can take on slot-antenna characteristics, seriously degrading the shielding effectiveness. If linked armor conduit is required, all internal wiring should be individually shielded. Degradation of conduit shielding is usually not because of insufficient shielding properties of the conduit material but rather the result of discontinuities in the cable. These discontinuities usually result from poor splicing or from improper termination of the shield. Zippered tubing may provide greater than 60 dB of shielding to frequencies below 1 GHz.

For protection against primarily magnetic fields, shielding materials with high permeability are necessary. For example, iron or steel conduit offers better protection against magnetic fields than does aluminum conduit. In lieu of ferrous conduit, annealed high permeabiliy metal strips wrapped around the cable are sometimes used. Multiple layers of counterspiral-wound nickel-iron or silicon-iron alloys, or low carbon steel frequently prove effective. High permeability tape is also available with or without adhesive backing. Also, combination high permeability, high conductivity tape is available which provides both electric and magnetic shielding.

The proper installation of cables is essential if interference difficulties are to be avoided. Assuming proper grounding techniques have been employed, the following are suggested as guidelines for good signal cable practice.

a. Choose the cable to be utilized according to the characteristic impedance desired, amount of signal attenuation permitted, environment within which the cable must exist, and characteristics of the signal to be transmitted.

b. Where a high degree of shielding is needed, cables with multiple shields separated by insulation should be used. Double shielding is not effective unless each shield is insulated from each other.

c. Overall shields of multipair cables should not be used for signal return paths.

d. Individually shielded cables, where used, should have insulating sleeves or coverings over the shields. Balanced signal circuits should use twisted pair or a balanced coaxial line with a common shield. A coaxial line with a shield is commonly called a triaxial cable. Where multiconductor twisted pair cables that have individual shields as well as a common shield are used, all shields should be insulated from one another within the cable.

e. Coaxial cables should, in all cases, be terminated in their characteristic impedances.

f. Coaxial cables carrying high-level energy signals should not be bundled with unshielded cables or shielded cables carrying low-level signals.

g. Grounding a number of conductor shields by means of a single wire to a connector ground pin should be avoided, particularly if the shield-to-connector, connector-to-ground lead length exceeds one inch, or where different circuits that may interact are involved. Such a ground lead is a common impedance element across which interference voltages can be developed and transferred from one circuit to another.

Great care should be taken at connectors if impedance characteristics and shielding integrity are to be maintained. A shielding shell should be used to shield the individual pins of a connector; a well-designed connector has a shielding shell enclosing its connecting points. The shell of multiple connectors should be connected to the shield. Coaxial lines should terminate in shielded pins. The use of pigtail connections for coaxial lines is undesirable since it permits rf leakage.

Serious interference problems arise when shielded wires or coaxial cables are not properly terminated at the connector. It is important that the connector be properly grounded. The direct bonds for this ground can be achieved by maintaining clean metal-to-metal contact between the connector and equipment housing. In those cases where a large number of individual shields from shielded wires must be connected to ground, it is recommended that the halo technique be used. The exposed unshielded leads should be as short as physically possible to reduce electrical coupling between conductors. Interference is caused when a shielded cable is run into a completely sealed box, but is grounded internally. The correct way to install a shielded rf cable is to run the shield well inside the connector and bond it around the connector shell.

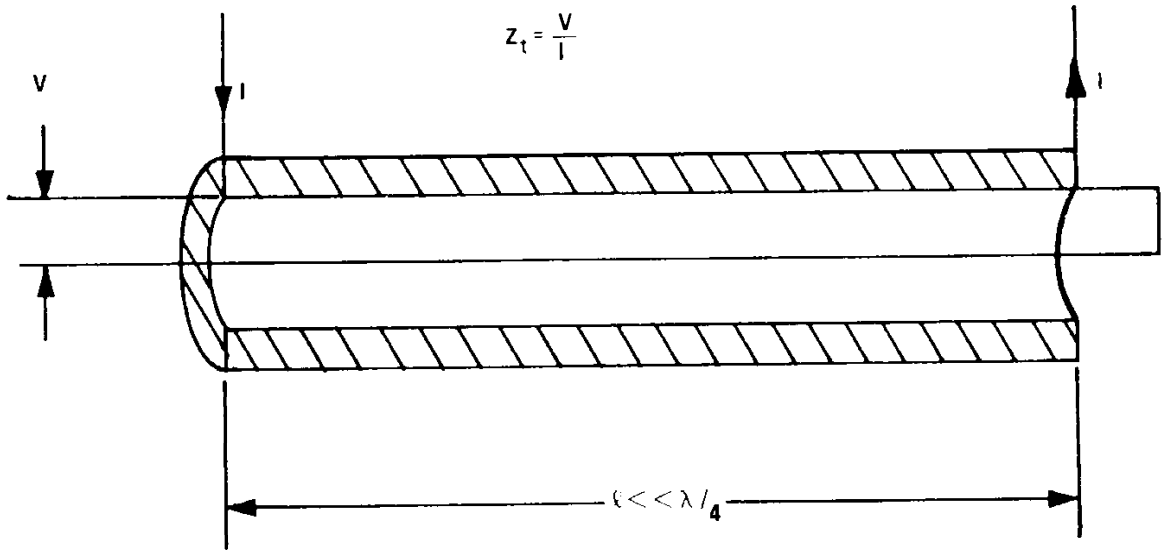

Figure 8-33. Surface Transfer Impedance

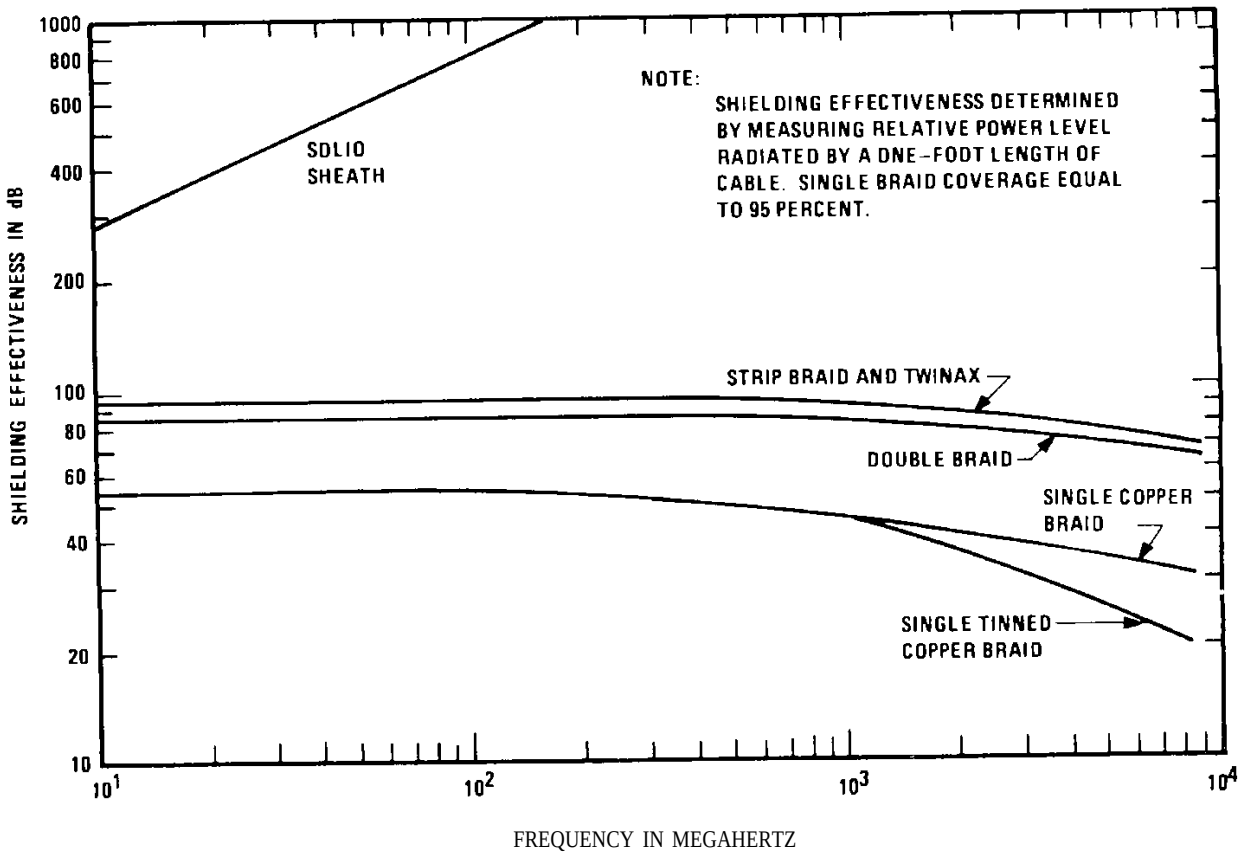

Figure 8-34. Shielding Effectiveness of Various Types of RF Cables as a Function of Frequency (8-15)

8.8.2 Terminations and Connectors.

If the effectiveness of a shield is to be maintained, the cable shield must be properly terminated. In an otherwise adequately shielded system, rf currents that are conducted along shields can be coupled to the system wiring from the point of an improper cable termination. This is a particularly important consideration in the case of cables exposed to high power rf fields.

In a properly terminated shield, the entire periphery of the shield is grounded to a low impedance reference, minimizing any potentials at the surface of the termination. MIL-E-45782B (8-16) recommends against use of soldering to terminate shields because of the danger of damaging conductor insulation, and suggests a variety of termination methods, all involving crimping operations. The use of silver epoxy or other synthetic conducting material has been found to be unacceptable for shield bonding because of lack of mechanical strength necessary for this application.

Cable connectors are made in many styles for a multitude of power, signal, control, instrumentation, transducer, audio, video, pulse, and rf applications. They are made to fulfill special functions and may be required to be hermetically sealed, submersion proof, and weatherproof. They are manufactured in the straight type, angle type, screw-on type, bayonet twist-and-lock type, bayonet screw-on-type, barrier type, straight plug-in type, and push-on types (see Table 8-18).

Figure 8-35 illustrates the type of connector that should be used when a shielded cable assembly contains individually shielded wires. The practice of pigtailing these shields and connecting them to one of the pins is not recommended. The individual shields should be connected to coaxial pins specifically adapted for this purpose, with the shields of the mating surfaces making contact before the pins.

When maintaining the shielding integrity of a connector pair (i. e., two interconnecting connectors), a good method to employ (see Figure 8-36) is to place spring contacts inside one portion of one connector so that positive contact is made along the circumference of the mating parts. These contacts are extended so that the shell of the connector mates before the pins make contact on assembly of the connector and breaks after the pins on disassembly. A connector which meets these requirements is available under MIL-C-27599 (8-17) and is the preferred type to be used in rf-proof designs.

The advantages gamed using circumferential spring fingers over bayonet coupling is dramatically illustrated in Figure 8-37. In this case, the spring contacts were of silver-plated beryllium copper.

8.9 SHIELDED ENCLOSURES (SCREEN ROOMS). Screen rooms are specially constructed enclosures designed to provide an electromagnetically quiet area. In very high level signal environments or where very sensitive equipments must be protected, screen rooms may be necessary. Table 8-19 summarizes some of the more significant features of twelve different types of screen rooms. These same rooms with carefully engineered apertures and openings can be expected to provide at least 100 dB attenuation to electric and plane wave fields. When the installation of a shielded room is required, a number of alternatives must be considered. The most important of these alternatives is whether to shield an existing or future room or building, or whether to provide a remountable enclosure which may be relocated quite simply when the need arises.

Table 8-18

Connector Application Summary

Connector Series	For RG-/U Cables	Disconnect Style	Voltage Rating	Characteristic Impedance	Frequency Range	Method of Assembly
N	5, 6, 8, 9, 10, 11, 12, 13, 14, 17, 18	Screw-on type	500 V peak	50 ohm 70 ohm	Up to 10 GHz	Manual
GR-874	8, 9, 29, 55, 58, 58A, 59, 62, 116	Push-on type	1500 V peak	50 ohm	Up to 7 GHz	Manual
C	8, 9, 10, 12, 14, 55, 58	Bayonet Lock type	1000 V peak	50 ohm	-----	Manual
UHF	8, 9, 10, 11, 12, 13, 44, 58, 62, 63, 65, 71	Screw-on type	500 V	(nonconstant)	Up to 200MHz	Manual
LC	17, 18	Screw-on type	5000 V peak (modified to 10 kV)	50 ohm	-----	Manual
SN	8, 9, 10, 17, 18	Screw-on type	5000 V peak	50 ohm	-----	Manual
BN	55, 58, 59, 62, 71	Screw-on type	250 V peak	(nonconstant)	Up to 200 MHz	Manual
BNC	55, 58, 59, 62, 71	Bayonet lock type	250 V peak	50 ohm	Up to 10 GHz	Manual & Crimp-on
Sub-miniature	174	Screw-on & Push-on types	-----	50 ohm 75 ohm	-----	Crimp-on

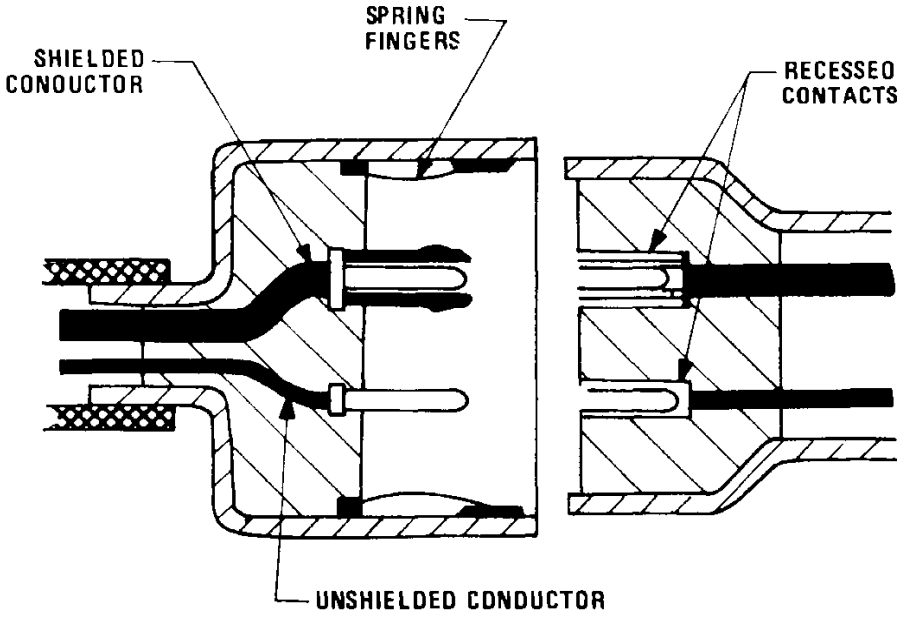

Figure 8-35. Connector for Shield Within a Shield

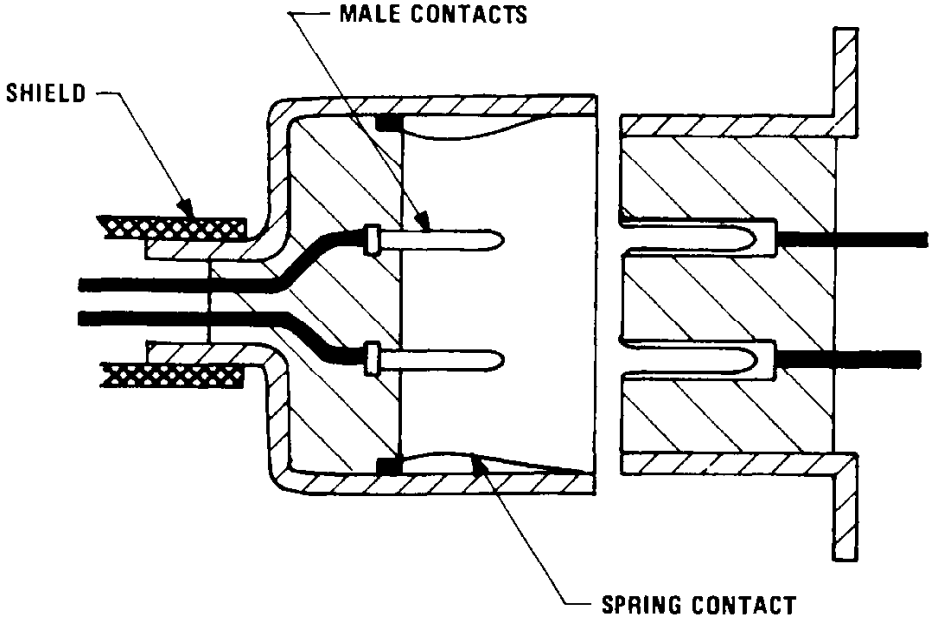

Figure 8-36. RF-Shielded Connector

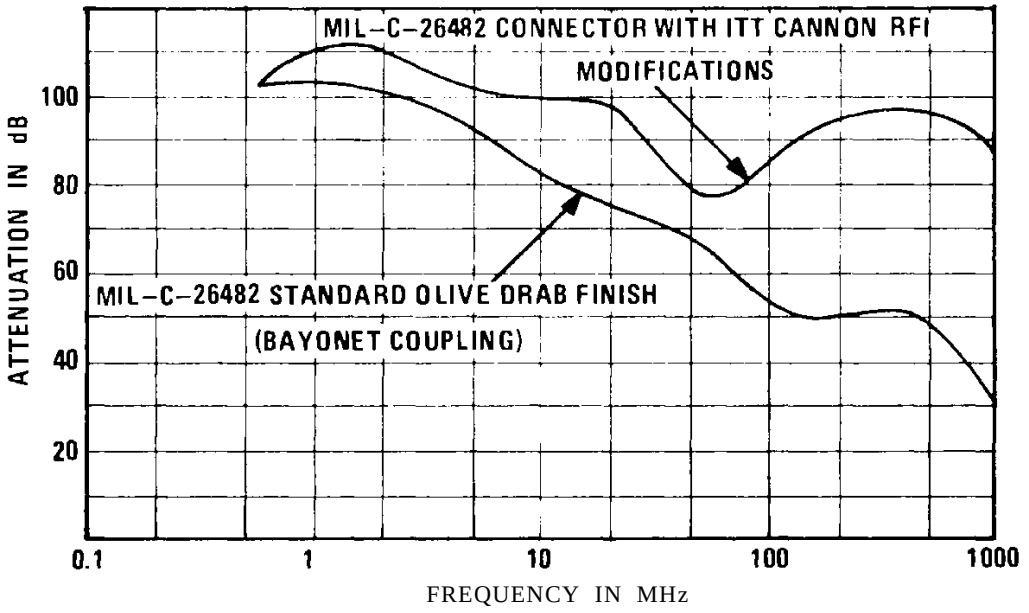

Figure 8-37. Effectiveness of Circumferential Spring Fingers for Improving the Shielding of a Connector (8-18)

8.9.1 Remountable (Modular) Enclosures.

The basic construction of a demountable enclosure might be a 1.27 cm (1/2 inch) thick plywood panel faced on both sides with an electro-galvanized steel sheet of nominal 0.56 mm (0.022") thickness. For non-isolated double shields, the double facing of the walls makes panel-to-panel joining a considerably more certain process as each bonding joint is duplicated. The joining between wall panels is effected by a specially formed metal section, and tile design of this requires a fairly precisely controlled blend of resilience and rigidity to establish continuous contact without gaps throughout the length of each bonding member.

The most critical part of any shielded enclosure is the door; with some modern installations doors sizes of 1.86 square meters (20 square feet) and above are required. In general, two types of door bonds are used: these are referred to as the "wedge" and the "knife edge" design. The most commonly used is the wedge door (Figure 8-38) which takes the form of a standard casement type hinged opening leaf or leaves with the frame and the door leaf edges shaped to form a wedge entry, and beryllium copper finger stock affixed in a double layer around the complete periphery of the door leaf. The reason for adopting the wedge design is that, by correctly choosing the angle of wedge, contact pressure on tile finger stock can be made high without the risk of tearing and breaking of the spring fingers when the door is opened; it has been found that this type of construction can achieve an overall performance on the order of 125 dB attenuation. The second type of door which has been used for special applications is the knife edge design in which the door leaf is provided with a flanged edge made to enter between two sets of finger stock contacts, enclosed within a channel section fixed upon the door frame. An advantage of this construction is that finger stock is completely protected and the performance is better than obtainable with a wedge door, especially at low frequencies.

Table 8-19

Characteristics of Commercially Available Shielded Enclosures (8-13)

Room Description	Frequency (kHz)	Magnetic Shielding Effectiveness (dB) MAX	MIN
Copper screen cell type	15	61	56
Styrofoam core, sheet metal skin.	200	97	96
Braided gasket material on door.	15	90	54
	150	87	63
Hollow core construction. Piano	15	100	81
hinge on door with finger stock.	200	118	108
29 mil sheet metal bonded to 3/4” plywood base panel (2 sides) with bolted seam clamps. Three point suspension of personnel door. 20/50 foot overhead door with double row finger stock.	1000	100	80
Construction similar to above,	18	93	64
except no overhead door.	150	120	95
26 gauge steel with folded and soldered seams	14	58	34
between panels. Commercially available door	280	75	58
with double row of beryllium copper finger stock. All power lines provided with filters.			
Continuously soldered 20 gauge sheet metal with	14	70	65
1.25 oz/ft^2 zinc electroplate. Two commercial	100		90
doors with finger stock (2 rows). Power line filtering installed. Room size = 20 x 20 x 8 feet.			
Continuously inert-gas welded sheet steel, 12 gauge	14	90	74
with overlapping seams. Standard commercial	200	130	106
shielded room door with double row finger stock.			

Table 8-19 (Continued)

Room Description	Frequency (kHz)	Magnetic Shielding Effectiveness (dB) MAX	MIN
Similar to above in construction features.	15	111	50
	100	99	81
Double shielding of 10 gauge continuously inert-gas welded low carbon sheet steel, 2" spacing between walls, pneumatic bladder, expanding panel sliding doors (no gasket).	0.1		25
	1	62	52
	15	108	92
	100	120	107
Room partitioned into three separate rooms; two are 12' x 12' x 10' and the third is 12' x 12' x 14'. All seams continuously inert-gas welded 16 gauge sheet steel. Doors have pneumatic bladder with triple row of finger stock.	0.5	104	73
	1.0	122	
	5.0	80	
	10	39	
	15	20	
Room divided into three cells. Single shielding sheet steel continuously inert-gas welded, with pneumatic bladder, and expanding panel sliding doors (EMI gasket for contact surface). Total room size 30 x 70 x 12 feet.	1	115	
	15	114	104
	100	140	114
	10,000	119	61

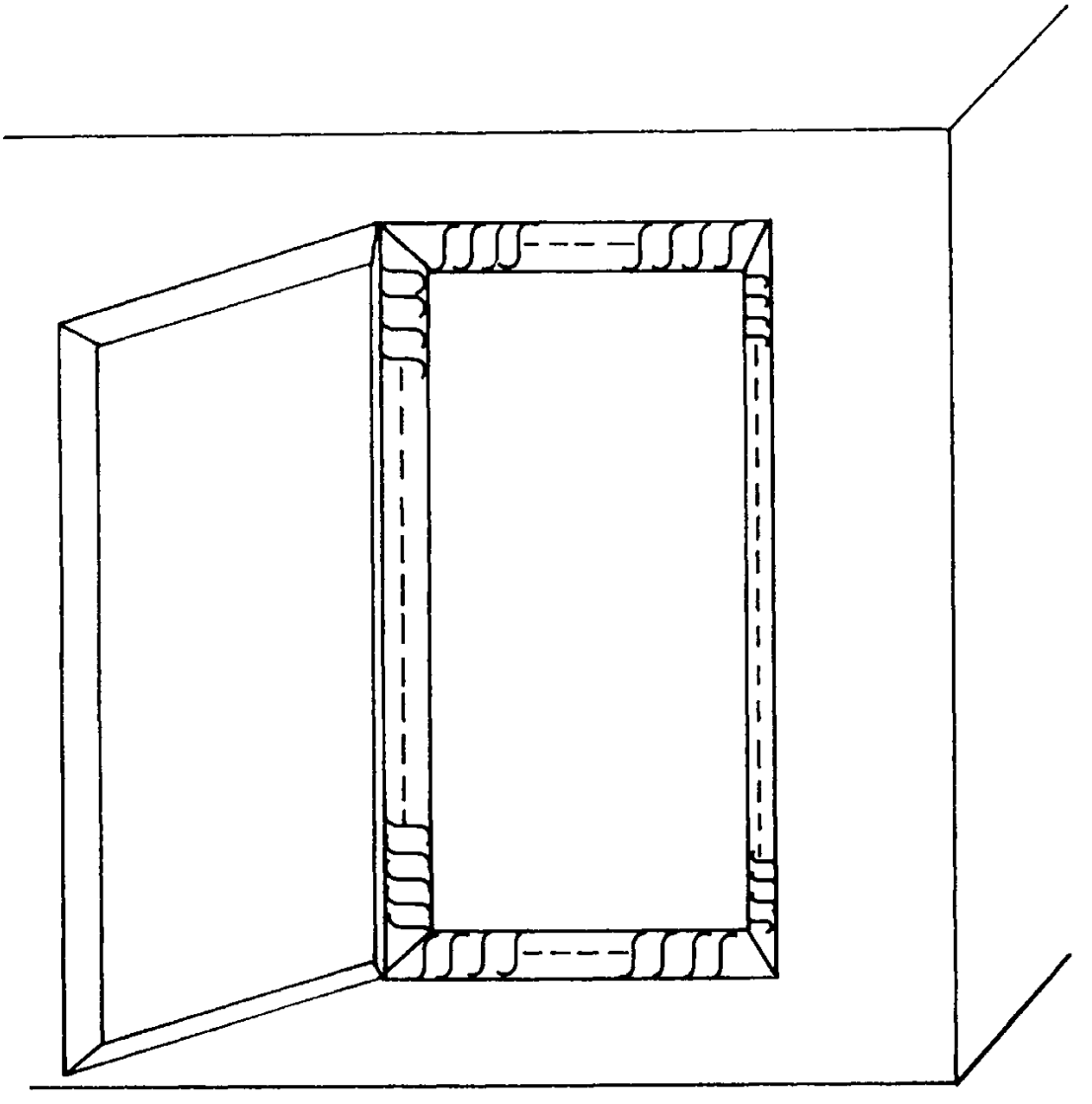

Figure 8-38. Use of Finger Stock for Door Bonding

Additional door bonding may be incorporated with either woven Mumetal gasketing (for very low frequencies), or flexible microwave absorber (for very high frequencies).

To attenuate signals below 50 MHz, waveguide hallways can be used (8-19). The cutoff frequency is proportional to the largest lateral dimension of the hallway; therefore, a tradeoff is generally necessary between hallway size and required attenuation. As shown in Section 8.5.3.1, the amount of attenuation of frequencies below cutoff is a function of hallway length. The waveguide hallway may be constructed of 20 gauge, or thicker, low carbon steel supported by any structurally sound, but nonconductive material.

In all types of door design intended for use at frequencies above a few hundred megahertz, it is desirable to avoid metallic penetration of the door. A special locking catch has been designed which enables full retention of the door leaf and release of the latch from both sides of the door without the need for any metallic penetration of the shield. This lack of metallic penetration is important since even with the most adequate bonding any operating shaft severely increases the risk of shield degradation at frequencies where the shaft's length becomes resonant. It is also important to ensure that even insulating penetrations through the shield which pass through waveguide-below-cutoff tubes are correctly designed. Although the cutoff frequency of a waveguide in air can be easily calculated, the inclusion of insulating material of high dielectric constant in the waveguide considerably reduces the cutoff frequency.

A further requirement for shielded enclosures is adequate ventilation. Honeycomb structures provide a virtually unimpeded passage for air flow and are normally incorporated in ventilation ducts, ventilation openings, and fans or air conditioner systems.

It is essential to avoid signal penetration via power and signal wiring. This demands that filters achieving adequate insertion loss are installed in all incoming cables; it is fairly normal to have three-phase power circuits and several hundred signal lines going into a large enclosure. It is essential that the filters provide the specified attenuation under full-load conditions at all frequencies. Unless the filter attenuation is maintained at all frequencies and load currents, the overall shield attenuation will be degraded by the signal penetration via the filters. Shield penetrations may also be provided for air, gas, and water lines; these can be achieved either by the use of waveguide-below-cutoff tubes carrying insulating piping or by welding metal pipework to the shield. It is essential that all input circuits and penetrations occur in a localized area.

It is necessary that the shield be grounded adequately for safety purposes. Although an external ground connection has no effect on the equipment placed within an ideal shield since the shield itself forms its own private world, an external ground is essential to prevent the enclosure from reaching dangerous potentials relative to its surroundings.

8.9.2 Custom Built Rooms.

In spite of the wide range of use of remountable modular enclosures, a considerable demand exists for specialized custom built shielded areas. These are employed either where the insertion loss requirements are markedly different from those obtainable from modular rooms or where the area to be enclosed is exceptionally large and economy dictates that some other design be adopted. Many forms of construction are used and these include enclosures made from woven copper or steel mesh, from pierced and expanded metal, from aluminum or copper foils, from high permeability materials such as Mumetal, and from all–welded steel sheet.

The use of mesh and open work materials is only employed where a very economical construction is required and only a low shielding performance is necessary. Likewise the high permeability foils are not normally employed, although the low frequency performance of these can be extremely good when related to the foil thickness. A more economical construction often results from the use of welded steel in thicker gauges, although high permeability materials are required where the shield must provide high attenuation to extremely low frequency or constant magnetic fields.

The most efficient practical shielding is provided by a continuously welded steel sheet clad enclosure. Standard practice in Great Britian is to employ a 1.2 mm (0.048") thick electrogalvanized mild steel sheet continuously seam welded along all edges using an inert gas shrouded electric arc welding process. This approach may achieve the highest performance realizable at an economical price. Construction may either be supported by the walls and ceiling of the parent room, or the shield may incorporate its own independent steel framework.

The shielding effectiveness of a shielded enclosure can be improved with the use of double shields. As indicated in the earlier section on the theory of shielding, the shielding effectiveness of two parallel (but slightly separated) shields is better than that of one double thickness shield but not twice as effective as a single-thickness shield. The actual improvement in shielding efficiency is dependent upon the degree of electrical isolation maintained between the two shields.

At least one manufacturer (8-20) of shielded rooms maintains that the isolated double shielded room is substantially more effective than either the single-shielded or the "not isolated double shielded" room. The same types of doors, ventilation apertures, and filters described for the modular rooms are used except that in many cases an rf-proof access lock is provided; this may combine interlocks between the doors and completely automatic operation either by electric, hydraulic, or pneumatic systems.

8.9.3 Foil Room Liners.

When the shielding requirement does not justify an all-welded steel room or a separate screen room, it may be possible to use metal foils. For example, a copper foil nominally 5 mils thick with continuous soft soldered seams may be employed. This copper foil can be glued to the walls, floor, and ceiling to provide a complete lining to an existing room. If this construction is used in conjunction with gasketed metal doors, properly designed vents, and electrical filters, performance, while not being good for low frequency magnetic fields, can be comparable to welded steel at the higher frequencies. To achieve this performance, it is essential that all seams and joints be carefully soldered to establish continuous bonds. The cost of construction is not as low as it might first appear, especially when the additional complications which result from the need to provide fixtures for internal decorative finish and equipment mounting within the shielded area is considered. In general, this form of construction is only used where a relatively unsophisticated enclosure is required, e.g., in certain electro-medical work. If even more economy is required, it is possible to omit the soldering of the joints between the copper foils and use a conductive adhesive tape which is less expensive to install. If only electric fields are present at low frequencies, then a copper foil shield constructed in this manner will probably be adequate.

When shielding is required only for microwave frequencies, a very economic shield may be constructed using aluminum foil of approximately 5 mils thick glued to the walls, floor, and ceiling. An overlap between adjacent foil sheets of approximately 5 cm (2 inches) should be allowed; these overlaps should be secured with aluminum-backed contact adhesive tape. This type of shield is most effective at frequencies above several

hundred megahertz; its shielding effectiveness increases with frequency since the bond between adjacent sheets is primarily capacitive. The normal application for this type of shield is for the protection of computers and data processing installations operating in the vicinity of high power radars. Where shields of this type are intended to work only at very high frequencies, it may be possible to dispense with the shielding over part of the central floor area in ground level installations.

8.10 TESTING OF SHIELDS.

Shield testing may be categorized as (1) the testing of shielding materials to determine their shielding properties, and (2) the testing of shield designs (such as shielded enclosures) to determine whether or not the design and construction are satisfactory. The first category of testing results in design data such as that described earlier in this chapter, and is usually performed by the shielding material manufacturer rather than the equipment designer or user. Methods for performing these and related tests can be found in Reference 8-21 and are not discussed further here. On the other hand, the second category (the testing of equipment shields and shielded rooms for verification of sufficient shielding effectiveness) is a necessary part of equipment development and/or acceptance and is therefore discussed in the following.

The testing of constructed shields is necessitated by the somewhat unpredictable effects of both intentional and unintentional openings and seams in the shield. Localized testing can point out the location of electromagnetic (EM) leaks such as those resulting from welding faults in seams and from poorly fitting gaskets. Such testing is frequently necessary for the successful construction of shielded enclosures. Uniform field (as opposed to local) testing is useful for acceptance testing of a shield. Methods have been developed for both localized and uniform shielding tests for variable-frequency EM fields of low impedance (magnetic), high impedance (electric), and plane waves.

The variety of test methods available for evaluating shielding effectiveness are due, at least in part, to the many different factors that can affect material shielding capabilities. These factors include the configuration of the shield (Is it a sheet of material, or is it a box?), the frequency range of concern, whether or not the impinging wave is planar, the wave impedance, and others. This section will discuss some frequently employed and generally applicable shielding effectiveness tests. Frequently employed tests include:

a. Low Impedance Magnetic Field Testing Using Small Loops,

b. Low Impedance Magnetic Field Testing Using a Helmholtz Coil,

c. High Impedance Electric Field Testing Using Rod Antennas,

d. High Impedance Electric Field Testing Using a Parallel Line Radiator,

e. Plane Wave Testing Using Antennas,

f. Plane Wave Testing Using a Parallel Plate Transmission Line, and

g. MIL-STD-1377 Testing (8-22).

A number of the above tests are very similar to tests designed to measure equipment and system EMC in accordance with MIL-STD-462 (8-23). They also are similar to tests performed to evaluate EM effectiveness of shielded enclosures used for testing purpose in accordance with MIL-STD-285 (8-24). One who is concerned with the measurement of shielding properties should become familiar with both of these standards.

The MIL-STD-1377 tests represent procedures for evaluating the shielding (and filtering) effectiveness of systems. The specification contains a unique approach to shielding measurements; its cable effectiveness evaluation methods are good illustrations of how cable and connector performance tests should be performed.

It should be pointed out that a high degree of measurement accuracy cannot generally be expected for shielding tests. Typically, wave impedances are not established when the tests are performed, antenna correction factors used for calibration purposes are based on plane-wave assumptions even though the test condition may not warrant this assumption, the degree of radiated field distortion by proximal structures is not known, and other factors limit the accuracy of the measurement. However, the tests can be expected to provide guidance on the shielding design approaches and the general effectiveness to be expected of those approaches.

8.10.1 Low Impedance Magnetic Field Testing Using Small Loops.

This test is designed to indicate the shield's effectiveness in reducing the intensity of predominantly magnetic field radiation. It employs two small loop antennas and evaluates loop coupling with and without an intervening shield. MIL-STD-285 incorporates a similar magnetic field small loop measurement procedure to evaluate the shielding effectiveness of shielded enclosures used for electronic testing purposes.

In this test, a pair of identical small loop antennas are used, one on one side of the shield and one on the other, spaced equidistant from the shield. If an enclosure is being tested, the usual practice is to have the test signal source within the enclosure and the receiving loop and detector outside the enclosure.

Figures 8-39 and 8-40 show the two basic loop orientations. In Figure 8-39 the loops are coaxial, that is, both loops are normal to a common loop axis. In Figure 8-40 the loops are coplanar, that is, the loop surfaces lie on the same plane. Tests using at least these two orientations should be employed, but orientations that may result in a lower effectiveness figure should not be ignored. Both the loop diameters and the loop separations should be significantly less than the shortest dimension of the box, container, or enclosure being tested. Since this will result in only a small section of the shield being illuminated at one time, it will be necessary to move the loop over the entire surface of the shield to establish the effectiveness of the shield.

The frequency range over which this test can be performed is a function of the level of shielding effectiveness that must be measured (measurement system dynamic range), the sensitivity of the test equipment, the available power to drive the test transmitting loop, and the loop-to-shield separations. The limiting factors are usually the areas of the loops and the number of turns in the loops, since these establish the self-resonance frequency of the loop. Loop-to-loop separation should not be closer than the loop diameter.

The small loop-to-loop setup specified in MIL-STD-285 is shown in Figure 8-40 with the following parameter values employed:

Loop diameters (d): 12 inches (30.48 cm)
Loop-to-shield separations (r/2): 12 inches
Loops: One turn of No. 6 AWG Copper Wire
The test setup in this specification is intended to provide a minimum of 70 dB measurement range.

The corresponding test for a uniform magnetic field requires placing the test shielded enclosure within a Helmholtz coil (large loop), with a small detection loop inside the test enclosure. The use of a Helmholtz coil enables a large portion of the enclosure to be illuminated at one time. Various orientations of the sample relative to the loop should be tried. The frequency range is limited by the test sample size, which affects the size of the Helmholtz coil. Increasing coil size increases its inductance, reduces its self-resonant frequency, and decreases the frequency range over which its magnetic field strength remains constant. The coil diameter should be at least two and preferably three times the longest test sample dimension. The upper frequency limit is typically 100-500 kHz.

8.10.2 Additional Test Methods. Although additional test methods for medium and high impedance incident waves exist, they are less frequently applied since the most difficult problem is the shielding at low frequency, magnetic fields.

8.11 PERSONNEL PROTECTION SHIELDS.

Shields for the reduction of EMI are also appropriate for protecting people from potentially hazardous radiation, either ionized or nonionized in nature. For most situations where sensitive electronic apparatus is present, the facility shielding required to prevent EMI is more than adequate to provide personnel protection. However, for high level incident fields, the need for personnel protection alone should not be overlooked. Areas of particular concern are those near high voltage vacuum devices which may emit X-rays, near high power rf sources or emitters such as acquisition and search radars, or near other sources of potentially damaging emanations such as laser emissions encountered during maintenance of fiber optics containing laser diodes.

Shields for protection against contact with hazardous voltages at very low frequencies, i.e., dc and 50/60 Hz, are not generally of the same type as those which protect against radiated fields. Personnel protection may be nonconducting and function more as a simple physical barrier which prevents accidental contact. Metal electromagnetic shields may also establish a physical barrier; however, the barrier is an incidental byproduct and should not be considered to be the primary purpose of the shield.

8.12 DETERMINATION OF SHIELDING REQUIREMENTS.

Comprehensive shielding of a structure, particularly a large one, can be very expensive. Fortunately, if the threat signal environment is known or can be predicted, an appropriate choice of available or existing materials can accomplish the necessary shielding with minimum costs. Methods available for establishing the amount of shielding required in a given location include analyzing equipment malfunctions or disturbances, performing an electromagnetic site survey to obtain power density levels, and performing electromagnetic susceptibility and emissions tests of the equipments which are to be located in the facility. Shielding requirements can then be determined by comparing the susceptibility levels of the equipment against the power density levels measured in the area where the equipment is to be located.

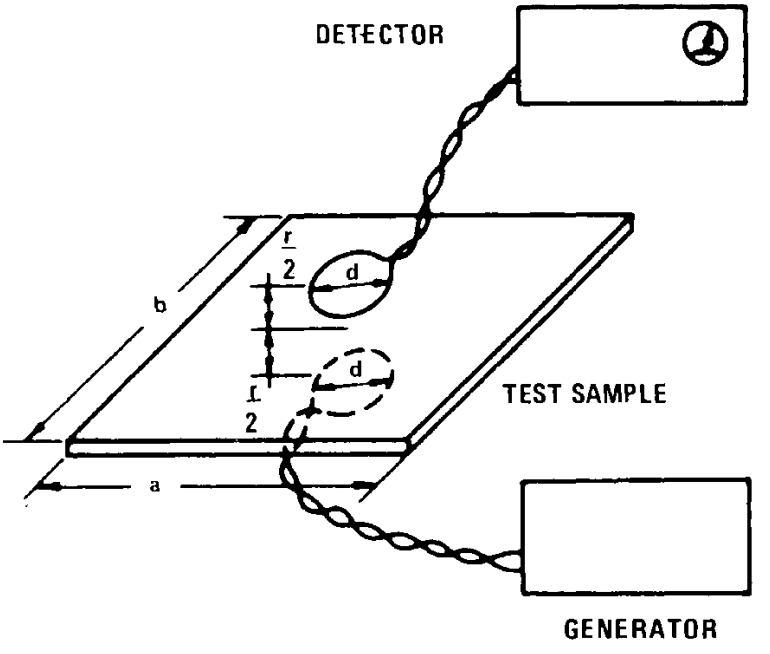

Figure 8-39. Coaxial Loop Arrangement for Measuring Shield Effectiveness

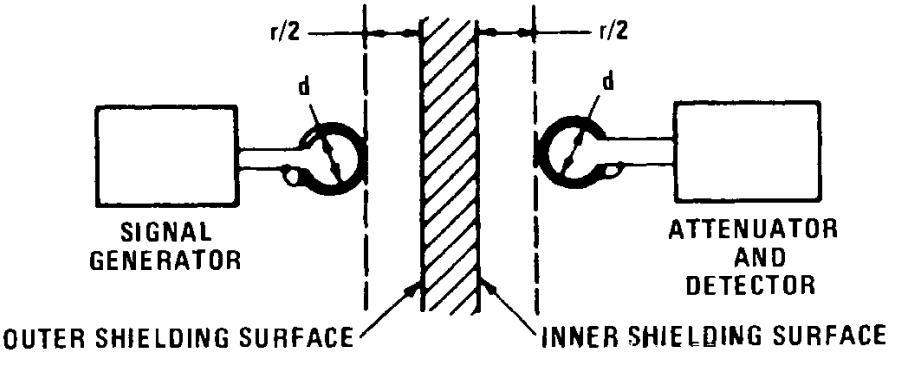

Figure 8-40. Coplanar Loop Arrangement for Measuring Shield Effectiveness

8.12.1 Equipment Disturbances.

A reliable indicator of the need for shielding of an equipment is the degree of interference that it experiences or causes. Recognizing that interference can be the result of one of the four different coupling modes, it must be determined that coupling will occur through one of the modes which can effectively be combatted by shielding. For example if the interfering signal is coupled into the equipment or system on a power or signal line, shielding the equipment may accomplish little. The line picking up the disturbing signal may be made less susceptible to interfering signals by careful shielding of the line itself. If inductive, capacitive, or radiated coupling is the cause of the problem, then shielding of the cable either alone or along with the equipment will be effective.

If the equipment is going into a new facility and the decision to be made is whether or not shielding is necessary, the behavior of that equipment in other similar environments should be considered. If the performance of the specific equipment is not known, the behavior of equipments of similar types or construction should be studied. The most reliable method of determining shielding requirements is to compare known susceptibility levels of the equipment or system with known measured power density levels in the area where the equipment or system is being installed.

8.12.2 Electromagnetic Environmental Survey.

The most effective way of determining the power densities at the location where the equipment or the structure is to be located is by conducting an electromagnetic environmental survey. This survey is performed using calibrated antennas with special field strength meters or spectrum analyzers. These instruments permit the strength of radiated fields to be determined in terms of volts per meter or in power density, i.e., watts per square centimeter or square meter. For personnel hazard determination, commercially available rf radiation monitors may be used.

The spectrum survey should attempt to identify the presence of all potentially interfering fields. Of particular concern is the field strength of the signals emitted by readily identifiable sources such as commercial radio and television stations, and radar and communications transmitters. Other possible sources of interference include rf heating units, rf welders, microwave ovens, and, in locations near medical facilities, diathermy and electrocautery machines. Desk top evaluations can also be employed to calculate power density/signal strength levels in a given area if all local emitters (including output power, locations, etc) can be identified.

The electrical power system can also be a source of interference. High voltage transmission systems, in particular, frequently generate noise through corona discharge and arcing across dirty connectors and insulators. The frequency spectrum of this noise generally extends well into the HF region (3-30 KHz) or above and can be a cause of severe problems. The routing, either existing or planned, of power lines should be noted carefully. If long runs of signal and control cables in parallel with power lines, either overhead or underground, are unavoidable, shielding of the signal and control cables may be necessary.

In addition to the above identifiable sources of energy against which shielding may be required, other less obvious sources exist. For example, ignition noise from internal combustion engines can be troublesome. Also, office machines, vending machines, and fluorescent lights have been frequently observed to produce interference in digital computers, measuring systems and other sensitive equipments.

8.12.3 Equipment EMI Properties.

Different equipments will exhibit different emission and susceptibility properties depending upon the job to be performed, the method of design, the type construction, the type components used, and a variety of other factors. The best indicator as to how much shielding is going to be required for a given piece of equipment or for an entire complex is provided by the measured level of emissions or the susceptibility level of the equipment or system. These properties are determined by operating the equipment in an electromagnetically controlled environment and by (1) measuring the frequency and amplitude of the signals radiated or produced by the equipment or (2) irradiating or otherwise subjecting the equipment to a known field or given signal and noting the minimum level to which the equipment or system responds. Under field conditions, neither of these procedures should be expected to provide precise detailed data because reradiation and mutual coupling effects can cause wide variations in the measured results. However, with a reasonable sampling of the fields or with illuminations provided at various locations and different orientations, an order-of-magnitude estimate of the relative susceptibility or threat posed by the equipment or system should be possible. If precise data is needed, test procedures in accordance with accepted standards, such as MIL-STD-461 and MIL-STD-462 should be performed. Unfortunately because of the expense of performing detailed and accurate emission and susceptibility tests of equipments (even the ability to perform these tests on large complexes in a meaningful manner is doubtful), and because a decision is frequently required on structural shielding before the specific equipment population is known, it is generally necessary to direct attention only to the most critical equipments or systems expected to be installed in the facility. Shielding requirements can also be determined by comparing the susceptibility levels (MIL-STD-461) of the equipment being installed with the measured or calculated power density levels in the area where the equipment is being installed.

If it is simply not possible to anticipate or project the shielding requirements, then the resultant electromagnetic environment in which equipment will be required to perform must be measured or calculated and the information provided to the equipment supplier so that appropriate steps can be taken to assure that the equipment or system will function in that environment.

8.13 SYSTEM DESIGN CONSIDERATIONS.

The total area or volume of a facility to be shielded and the physical configuration of the shield is a function of:

a. the size of the equipment or system requiring shields;

b. the physical layout including orientation between sources and receptors;

c. the amplitude and frequency of the interfering signals; and

d. the cost of materials.

These factors typically interact and, although in a given situation one will predominate, all must be considered.

8.13.1 Size. If a very sensitive piece of equipment or small system is to be located in a large structure, shielding the entire structure to protect that one small element is probably not cost effective. The cost of shielding is closely related to the size of the enclosed volume, assuming all other factors equal. Thus, a more economical approach would perhaps be to shield only the room in which the equipment is to be located, construct a shielded cage just for the susceptible (or offending) equipment, or upgrade the shielding of the particular equipment cabinet or enclosure. If, on the other hand, the susceptible element is a fairly large system, e.g., a communications center or a large scale computer, then incorporating appropriate shielding materials into the walls, floor, and ceiling of the room or structure may be necessary. If this requirement is recognized early in the design stage of the facility, the required shielding may be provided by properly-installed conventional structural materials. Also, supplemental shields can frequently be installed with greater economy if done during construction rather than later.

8.13.2 Layout.

If a susceptible equipment or system is to be located in a building and some choice exists as to position, special effort should be made to take advantage of the inherent shielding properties of the structure. The existence of metal walls, decorative screens, and other conductive objects may provide all the shielding necessary. Further, equipments frequently are more sensitive to radiated signals impinging from only one or two directions. Thus, orienting the equipment such that the susceptible side is facing away from the incident signal can lessen the shielding requirements.

Signal and control cables deserve special mention. Because the voltage (or current) in the receptor wire is inversely dependent upon the distance from the source wire and directly proportional to the length of the path, every effort should be made to avoid long runs in parallel.

8.13.3 Signal Properties.

The shielding effectiveness of practically all materials is frequency dependent. The type of shield which will protect against an X-band radar signal will not necessarily be effective against a commercial broadcast transmitter. In choosing a shield for a particular purpose, compare the attenuation properties of the material with the frequency of the threat signal.

The amplitude of the signal to be shielded indicates the amount of field attenuation the shield must provide. For most fields, the attenuation provided by the shield is not influenced by the magnitude of the field, i.e., a shield which will attenuate a low level field 60 dB will likewise attenuate a high level field 60 dB. Very strong magnetic fields, however, can cause saturation effects and the attenuation of the shield will generally decrease under very strong magnetic fields. This phenomenon is very important in choosing shields to protect against EMP for instance. Where saturation effects are likely, thicker shields are required in order to maintain the attenuation needed to protect against the very strong fields.

8.13.4 Cost.

The impact of size on cost was noted previously in Section 8.13.1 above. Other cost factors to consider include those associated with providing input and output ports for wiring and cabling, ventilation, and physical and visual access (doors, windows, meter openings, etc.) while maintaining the effectiveness of the shield.

8.14 REFERENCES.

8-1. S. A. Schelkunoff, Electromagnetic Waves, D Van Nostrand Co, Inc (1943).

8-2. W.W. Everett, Jr, Topics in Intersystem Electromagnetic Compatibility, Holt, Rinehart, and Winston, Inc, 1972.

8-3. R.B. Shultz, et. al., "Shielding Theory and Practice," Proceedings to the Ninth Tri-Service Conference on Electromagnetic Compatibility, IITRI, Chicago IL, October 1963, pp 596-635, AD 434850.

8-4. "Electromagnetic Compatibility," AFSC Design Handbook DH 1-4, Air Force Systems Command, 2 March 1984.

8-5. A.P. Hale, "Electromagnetic Shielding," 1973 IEEE International Electromagnetic Compatibility Symposium Record, New York NY, 20-22 June 1973, pp 330-339.

8-6. R.B. Schultz, "ELF and VLF Shielding Effectiveness of High Permeability Materials," IEEE Transactions on Electromagnetic Compatibility, Vol EMC-10, No. 1, March 1968, pp 95-100.

8-7. "Electromagnetic Compatibility Design Guide for Avionics and Related Ground Support Equipment," NAVAIR AD1115, Department of the Navy, Washington DC.

8-8. W. Jarva, "Shielding Efficiency Calculation Methods for Screening, Waveguide Ventilation Panels, and Other Perforated Electromagnetic Shields," Proceedings of the Seventh Conference on Radio Interference Reduction and Electronic Compatibility, Armour Research Foundation (IITRI), Chicago IL, November 1961, pp 478-498.

8-9. ITEM - 1973 R & B Enterprises. PO Box 328. Plymouth Meeting PA 19462.

8-10. "Electromagnetic Compatibility and Electromagnetic Radiation Hazards," NAVELEX 0101,106, Department of the Navy, Washington DC, August 1971.

8-11. H. M. Sachs, et. al., "Evaluation of Conductive Glass in Fluorescent Light Shielding Applications," Proceedings of the Sixth Conference on Radio Interference Reduction and Electronic Compatibility, Armour Research Foundation (IITRI), Chicago IL, October 1960, pp 281-294.

8-12. "Architectural Interference Data," RADC-TR-63-312, Contract AF 30(602)-2691, White Electromagnetics Inc, Bethesda MD, 20 August 1963.

8-13. "EMP Protection for Emergency Operating Centers," TR-61A, Defense Civil Preparedness Agency, Washington DC, July 1972.

8-14. E.F. Vance, "Shielding Effectiveness of Braided-Wire Shields," IEEE Transactions on Electromagnetic Compatibility, Vol EMC-17, No. 2, May 1975, pp 71-75.

8-15. "RF Transmission Line Catalogue and Handbook, TL-6," Times Wire and Cable Co, 385G Hall Ave, Wallingford CT 06492.

8-16. "Electrical Wiring, Procedures for, "MIL-E-45782B(1), 15 December 1980.

8-17. "Connector, Electrical, Miniature, Quick Disconnect (For Weapons Systems) Established Reliability," MIL-C-27599A(5) Supp 1A, 20 October 1971.

8-18. F.W. Schor, "Measurement of RF Leakage in Multipin Electrical Connectors," IEEE Transactions on Electromagnetic Compatibility, Vol EMC-10, No. 1, March 1968, pp 135-141.

8-19. W.D. Peele, et. al., "Electromagnetic Pulse (EMP) Protection Study," FAA RD 72-68, Rome Air Development Center, Rome NY, June 1972.

8-20. E.A. Lindgren, Contemporary RF Enclosures, 1967, Erik A. Lindgren and Associates, Inc, Chicago IL.

8-21. "Measurement of Shielding Effectiveness of High-Performance Shielding Enclosures," IEEE Recommended Practice, No. 299, June 1969.

8-22. "Effectiveness of Cable, Connector, and Weapon Enclosure Shielding and Filters in Precluding Hazards of Electromagnetic Radiation to ordnance, Measurement of, "MIL-STD-1377 (NAVY).

8-23. "Electromagnetic Interference Characteristics, Measurement of, "MIL-STD-462, 31 July 1967.

8-24. "Attenuation Measurements for Enclosures, Electromagnetic Shielding, For Electronic Test Purposes, Method of, "MIL-STD-285, 25 June 1956.

CHAPTER 9

PERSONNEL PROTECTION

9.1 ELECTRIC SHOCK.

Electric shock occurs when the human body becomes a part of an electric circuit. It most commonly occurs when personnel come in contact with energized devices or circuits while touching a grounded object or while standing on a damp floor. The major hazard of electric shock is death. Fatalities from shock total about 1,000 annually. In addition, numerous injuries occur each year due to involuntary movements caused by reaction currents.

The effects of an electric current on the body are principally determined by the magnitude of the current and the duration of the shock. The current is given by Ohm's Law, which, stated mathematically, is I= V/R where V is the open circuit voltage of the source and R is the resistance of the total path including the internal source resistance, and not just the body alone. In power circuits, the internal source resistance is usually negligible in comparison with that of the body. In such cases, the voltage level, V, is the important factor in determining if a shock hazard exists.

At the commercial frequencies of 50-60 Hz and at voltages of 120-240 volts, the contact resistance of the body primarily determines the current through the body. This resistance may decrease by as much as a factor of 100 between a completely dry condition and a wet condition. Thus, perspiration on the skin has a great effect on its contact resistance.* At voltages higher then 240 volts, the contact resistance of the skin becomes less important. At the higher voltages, the skin is frequently punctured, often leaving a deep localized burn. In this case, the internal resistance of the body primarily determines the current flow.

9.1.1 Levels of Electric Shock (9-l) (9-2).

The perception current is that current which can just be detected by an individual. At power frequencies, the perception current usually lies between 0 and 1 milliamps for men and women, the exact value depending on the Individual. Above 300 Hz, the perception current increases, reaching approximately 100 milliamps at 70 kHz. Above 100-200 kHz, the sensation of shock changes from tingling to heat. It is believed that heat or burns are the only effects of shock above these frequencies.

The reaction current is the smallest current that might cause an unexpected involuntary reaction and produce an accident as a secondary effect. The reaction current is 1-4 milliamps. The American National Standards Institute (9-3) limits the maximum allowable leakage current to 0.2 milliamps for portable two-wire devices and 0.75 milliamps for heavy movable cord-connected equipment in order to prevent involuntary shock reactions.

---

*For calculation purposes, the resistance of the skin is usually taken to be somewhere between 500 and 1500 ohms.

Shock currents greater than the reaction current produce an increasingly severe muscular reaction. Above a certain level, the shock victim becomes unable to release the conductor, The maximum current at which a person can still release a conductor by using the muscles directly stimulated by that current is called the "let-go" current. The "let-go" current varies between 4-21 milliamps, depending on the individual. A normal person can withstand repeated exposure to his "let-go" current with no serious after effects when tile duration of each shock lasts only for the time required for him to release the conductor.

Shock currents above about 18 milliamps can cause the muscles of the chest to contract and breathing to stop. If the current is interrupted quickly enough, breathing will resume. However, if the current persists, the victim will loose consciousness and death may follow. Artificial respiration is frequently successful in reviving electric shock victims.

Above a certain level, electric shock currents can cause an effect on the heart called ventricular fibrillation. For all practical purposes, this condition means a stoppage of the heart action and blood circulation. Experiments on animals have shown that the fibrillating current is approximately proportional to the average body weight and that it increases with frequency.

In Table 9-1, the various hazardous current levels for ac and dc are summarized along with some of the physical effects of each.

Table 9-1

Summary of the Effects of Shock (9-1) (9-2)

Alternating Current (60 Hz)	Direct Current	Effects
(mA)	(mA)	
0-1	0-4	Perception
1-4	4-15	Surprise (Reaction Current)
4-21	15-80	Reflex Action (Let-Go Current)
21-40	80-160	Muscular Inhibition
40-100	160-300	Respiratory Block
Over 100	Over 300	Usually Fatal

9.1.2 Shock Prevention.

Most shock hazards can be divided into two categories: unsafe equipment and unsafe acts. The most common hazards in each category can be controlled as follows:

a. Power cords and drop cords with worn and/or broken insulation should be routinely replaced.

b. All spliced cords should be removed from service.

c. Exposed conductors and terminal strips at the rear of switchboards and equipment racks should be enclosed and warning labels installed.

d. Rubber mats should be installed on the floor of all enclosures containing exposed conductors and on the floor in front of high voltage switches.

e. High voltage switches should be of the enclosed safety type.

f. All wiring should comply with recognized electrical codes and it should be large enough for the current being carried.

g. Temporary wiring should be removed as soon as it has served its purpose.

h. The noncurrent-carrying metal parts of equipment and power tools should be grounded.

i. The main power switch to all circuits being worked on should be locked open and tagged.

j. Power switches should be opened before replacing fuses and fuse pullers should be used.

k. Fuse boxes should be locked to prevent bridging or replacing with a heavier fuse.

l. Care should be taken to prevent overloading of circuits.

9.2 STATIC ELECTRICITY.

Static electricity is produced when two bodies, particularly of unlike materials, are brought into intimate contact and then separated. When in contact, there is a redistribution of charge across the area of contact and an detractive force is established. When the bodies are separated, work is done in opposing these attractive forces. This work is stored in the electrostatic field which is set up between the two surfaces when they are separated. If no conducting path is available to allow the charges to bleed off the bodies, the voltage between the surfaces can easily reach several thousand volts as they are separated.

Static electricity is an annoyance to many individuals. Static shock can result in discomfort and even injury to workers due to involuntary reaction. A far more dangerous aspect of static electricity is the fire and explosion hazard. This hazard can occur in situations where a vapor-air, gas-air, dust-air, or combinations of these

mixtures exist in the proper ratio, In order for static to be a source of ignition of the mixtures, four conditions must be fulfilled. These conditions are:

a. There must first be an effective means of static generation.

b. There must be a means of accumulating the separate charges and maintaining a suitable difference of electrical potential.

c. There must be a spark discharge of adequate energy.

d. The spark must occur in an ignitable mixture.

The most common sources of static electricity are:

a. Steam, air, or gas flowing from any opening in a pipe or hose, particularly when the stream is wet or when the air or gas stream contains particulate matter.

b. Pulverized materials passing through chutes or pneumatic conveyors.

c. Nonconductive power or conveyor belts in motion.

d. Moving vehicles.

e. All motion which involves changes in relative position of contacting surfaces (usually of dissimilar substances, either liquid or solid), of which one or both must be a poor conductor of electricity.

Static electricity can be controlled in a variety of ways. The most effective means are:

a. Bond all metallic parts of a system to prevent the existence of a statically-induced potential difference between any two metallic objects in the system.

b. Ground all metallic systems to prevent the accumulation of static charges.

c. Increase the relative humidity to 60% - 70% to increase the moisture content and thus the conductivity of insulating materials such as fabric, wood, paper, concrete, or masonry.

d. Use ionizing devices to ionize the surrounding air so that it becomes sufficiently conductive to bleed off static charges.

e. Use conductive materials for rugs, flooring, belts, etc. where nonconductive materials might otherwise be used.

9.3 RADIO FREQUENCY (RF) RADIATION HAZARDS.

The effect of rf radiation on living tissue is thought to be primarily thermal in nature. The most vulnerable parts of the human body are the eyes and the testes. However, other parts which can be affected are the brain, nerves, skin, and muscles. The thermal effects can range from a mild heating of the skin or organs to fatal damage.

Below 1000 MHz, rf energy penetrates deeply into the body. These frequencies are extremely hazardous since the radiation is not detected by the nerve endings located in the skin. The power absorbed in the body tissues can be as high as 40% of the incident power. The urinary bladder, gall bladder, and parts of the gastro-intestinal tract are particularly vulnerable since they are not cooled by an abundant flow of blood. Also, stainless steel and platinum bone implants and fillings in teeth can increase in temperature when subjected to rf radiation, resulting in burning of tissues.

In the 2-5 GHz region of the rf spectrum, the eyes and the testes are the most vulnerable organs to rf radiation damage. Damage to the eyes is generally irreversible and can result in blindness from cataracts or loss of lens transparency. Animal experiments have shown that damage to the testes from low levels of exposure does not differ from that caused by common forms of heat applied to the testes, and that the reduction in testicular function due to heating appears to be temporary. It is not known if rf radiation produces any genetic damage.

To minimize possible hazards from rf radiation, Dept of Defense Instruction 6055.11 (9-4) provides recommendations to prevent possible harmful effects in human beings exposed to radio frequency radiation.

9.4 LASER HAZARDS (9-5).

Biological damage from laser radiation is caused by photochemical, thermal, and pressure effects, acoustic and ultraviolet shock waves, plasma generation, ultrasonic emission, and even the generation of free radicals. Of these, the first three are the most hazardous to tissues, organs, and eyes. The damages include tissue ionization, molecular rearrangements, blood vessel occlusion, corneal opacity, retinal lesion, blindness, and even death. Lasers are divided into four classes: Class 1 is non-hazardous; Class 2 depends on blink reflex for the person to turn away to prevent a hazard; Class 3 is a direct or specular reflection hazard; Class 4 is all other high energy lasers. See ANSI Z136.1 for further information concerning safe use of lasers.

It is believed that damage to eye tissue by visible and infrared light is mainly thermal in nature. The lens of the eye is practically transparent in these regions, thus increasing the susceptibility to retinal burn or lesion. The susceptibility is enhanced by the fact that the power density of light converging on the retina is concentrated by a factor of 10^5 when it passes through the pupil and lens of the eye.

At near ultraviolet, the eye responds in nearly the same way as it does to visible light, the exception being a marked decrease in vision between 380 nm (10^{-9} meters) and 420 nm. This decrease is caused by the strong absorption at the lens of the eye. Extreme exposure to these wavelengths may lead to the development of cataracts. In the B and C ultraviolet bands, radiation is absorbed by the cornea and its outer layer. Excessive exposure to these wavelengths can cause a condition called “welder’s flash,” an effect similar to snow blindness.

Serious skin injury can occur at high power levels in the near infrared and visible regions. The skin becomes Increasingly sensitive in the ultraviolet region. Energy at these wavelengths penetrates deeply and can cause severe burns. In the near infrared range, the skin becomes relatively transparent, making the internal organs particularly susceptible.

9.5 X-RAY RADIATION.

X-rays are generated when electrons are accelerated to a sufficiently high velocity before colliding with an appropriate target. In addition to being produced by specifically designed equipment, X-rays can also be produced by high-voltage (> 15 kV) tubes used for other applications. It is important that all sources of X-ray radiation in equipments be identified and shielded so that they will not present a personnel hazard.

The maximum safe exposure to X-ray radiation is considered to be 100 milli-Roentgens per week (9-6). Based on a 40-hour work week, this limit translates into a maximum hourly rate of exposure of 2.5 milli-Roentgens per hour.

9.6 REFERENCES.

9-1. C.F. Dalziel, "Electric Shock Hazard," IEEE Spectrum, Vol 9, No. 2, February 1972, pp 41-50.

9-2. "Standard General Requirements for Electronic Equipment," MIL-STD-454J, 30 June 1985.

9-3. "Leakage Current for Appliances," C101.1-1973, American National Standards Institute, 1430 Broadway, New York NY 10018.

9-4 Dept of Defense Instruction 6055.11, 20 August 1986, "Protection of DOD Personnel from Exposure to Radio Frequency Radiation."

9-5. Marce Eleccion, "Laser Hazards," IEEE Spectrum, Vol 10, No.8, August 1973, pp 32-38.

9-6. Dept of Defense Instruction 6055.8, 3 January 1983, "Occupational Radiation Protection Program."

CHAPTER 10

NUCLEAR EMP EFFECTS

10.1 INTRODUCTION. In addition to the blast, thermal effects, and radioactive fallout, a nuclear detonation produces an intense electromagnetic effect. Under the proper circumstances, a nuclear detonation generates a high-intensity electromagnetic pulse (EMP) whose frequency spectrum may extend from below 1 Hz to above 300 MHz. This high-intensity EMP can disrupt or damage critical electronic facilities over an area as large as the continental United States, unless protective measures are taken in the facilities. The development of such protective measures involves grounding, bonding, and shielding and requires an understanding of the EMP itself.

10.2 EMP GENERATION.

10.2.1 High-Altitude EMP (HEMP). The high-altitude EMP (HEMP) produced by an exoatmospheric nuclear explosion is the form of EMP commonly of most interest because of the large area covered by a single bomb. The HEMP is also the form for which interaction and protection are most advanced. The standard HEMP waveforms to be used for tests and analyses of hardened systems are given in DoD-STD-2169 (SECRET-RD). A brief description of the three parts of the standard waveform is given below.

10.2.1.1 Early-Time HEMP.

The detonation of a nuclear weapon produces high-energy gamma radiation that travels radially away from the burst center. When the detonation occurs at high altitudes where the mean free path of the gamma photons is large, these photons travel great distances before they interact with another particle. As illustrated in Figure 10-1, gamma rays directed toward the earth encounter dense atmosphere where they interact with air molecules to produce Compton recoil electrons and positive ions. The Compton recoil electrons also travel radially away from the burst center initially, but these moving charged particles are acted upon by the Earth's magnetic field, which causes them to turn about the magnetic field lines (10-1).

The Earth's magnetic field accelerating the Compton recoil electrons causes them to radiate an electrodynamics field. Thus, the early-time HEMP is produced by this charge acceleration (electron turning) phenomenon that occurs in the atmosphere in a region about 20 km thick and 30 km above the Earth's surface (sea level). This source region covers the Earth within the solid angle subtended by rays from the burst point that are tangent to the surface of the Earth, as illustrated in Figure 10-2. To an observer on the ground, the incoming wave appears to be a plane wave propagating toward him from the burst point. The amplitude, duration, and polarization of the wave depend on the positions of the burst and the observer, relative to the Earth's magnetic field lines. Peak electric field strengths of over 50 kV/m with risetimes of a few nanoseconds and decay times of less than 1 μs are typical for this early-time portion of the HEMP (10-2}.

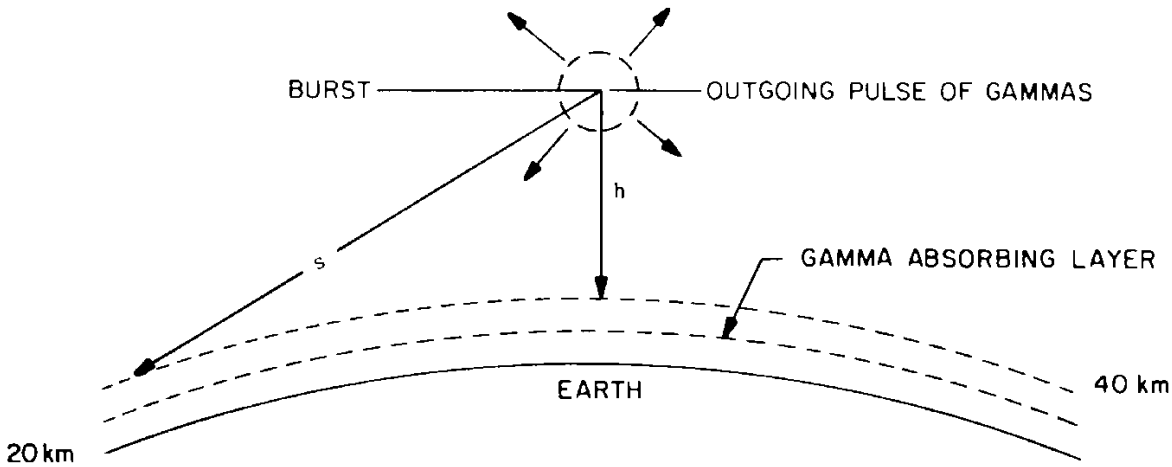

h= HEIGHT OF BURST = 400 km = 250 MILES

s= DISTANCE TO HORIZON =2,250 km = 1,400 MILES

A HIGH ALTITUDE BURST ILLUMINATES LARGE GEOGRAPHICAL REGIONS WITH GAMMA RAYS.

Figure 10-1. EMP from High Altitude Bursts

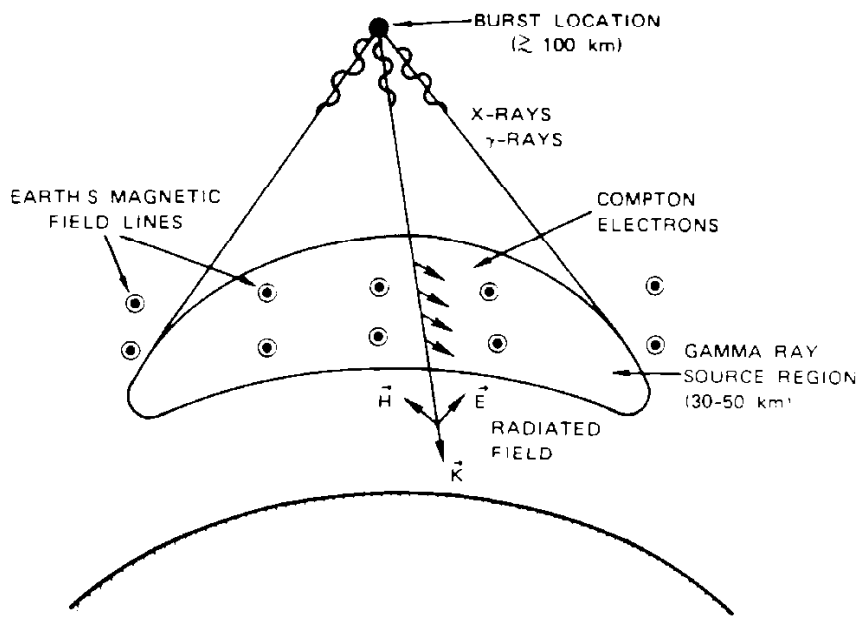

Figure 10-2. Schematic Representation of High-Altitude EMP Generation

10.2.1.2 Late-Time HEMP (MHDEMP). Much later (0.1 to 100 s), currents are induced in the ground by the effects of the expanding and rising fireball constituents. These effects are called the magnetohydrodynamic EMP (MHDEMP). They arise from the motions of the rapidly expanding bomb debris and hot ionized gases in the Earth's magnetic field. MHDEMP has two phases produced by two principal effects. The first effect is an ionospheric blast wave that deforms the geomagnetic field lines and produces an early phase of the MHDEMP that reaches the Earth's surface in 2 to 10 seconds and can be seen worldwide. The second effect is the "atmospheric heave," in which hot debris and air ions are moved across geomagnetic field lines to cause large circulating currents in the ionosphere. These currents induce image currents in the ground over a period of 10 to 100 seconds. Although the field strengths produced at the surface by the MHDEMP are small (tens of volts per kilometer), they occur over long times. Thus, the NHDEMP is a consideration for long power and communications lines and, because of its duration, for the energy it can deliver to protective devices.

10.2.1.3 Intermediate-Time HEMP. Between the early-time HEMP and the MHDEMP, transitory phenomena produce what is called intermediate-time HEMP. This HEMP lasts from about 1 μs to about 0.1 s. The intermediate-time HEMP observed at the Earth's surface has a peak electric field strength of a few hundred volts per meter and is predominantly vertically polarized.

10.2.2 Surface-Burst EMP. When a nuclear weapon is detonated at or near the surface of the Earth, neutrons and gamma rays are ejected radially outward from the burst center. The gamma ray photons emitted by the bomb, and others produced by neutron inelastic collisions with air, ground, and water, interact with air molecules to produce Compton recoil electrons. At or near sea level, however, the Compton recoil electrons quickly collide with air molecules to provide a copious supply of low-energy secondary electrons and ions. Thus, the Compton recoil electrons account for a large charge separation and, because of the secondary ionization, a fairly conductive air. As illustrated in Figure 10-3, the charge displacement is asymmetrical because of the Earth's surface. The initial dipole charge is discharged by current through the ionized air and soil. From a large distance, the EMP from a surface burst appears to emanate from a dipole source; it is vertically polarized and attenuated as l/r with distance, r, from the burst point. Thus, the surface-burst EMP is a more localized source than the HEMP. however, within the source region where the Compton electrons, secondary ionization, and relaxation currents occur, the fields are large, and long conductors, such as power lines and communication cables, may have large currents induced on them. These currents may be propagated along the conductors for great distances from their source. Therefore, this source-region EMP (SREMP) may be important to systems far outside the source region if they are connected to the source region through wires, cables, or other conductors.

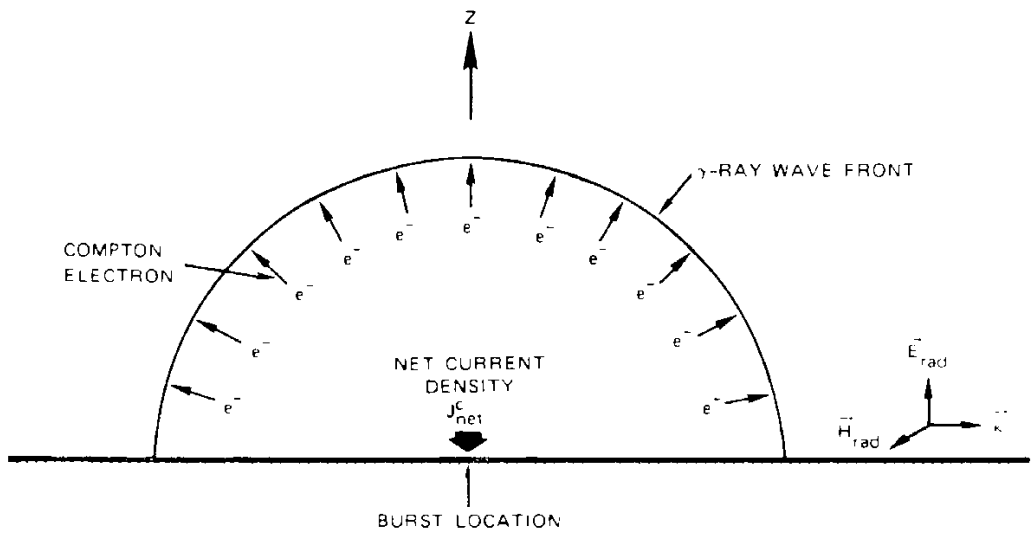

Figure 10-3. Surface-Burst Geometry Showing Compton Electrons and Net Current Density, J^c_{net}. Radiated Fields are Approximately Proportional to $d J^c_{net}/dt$ (Electric-Dipole Fields)

10.2.3 Other EMP Phenomena.

The high-altitude EMP (HEMP) is, by far, the most important form of EMP for communication facilities because of its large area of coverage. However, in addition to the HEMP and the surface-burst EMP, a few other electrical effects should be mentioned. System-generated EMP (SGEMP) is produced when the high-energy particles (mostly gamma- and X-ray photons) produced by the bomb interact directly with the system structure. These interactions knock electrons out of the structure, which causes current on the structure and potential gradients between the structure and the removed charge. The structure of interest may be system wiring or cable shielding; the current and potential differences are then on system circuits. (Because this EMP is often generated inside the system, it is sometimes called internal EMP (IEMP).) SGEMP is of major concern for satellites and other space vehicles because the gamma- and X-rays from the high-altitude bomb can travel great distances without colliding with another particle or structure. SGEMP is also a consideration for surface systems whose blast and thermal resistance permits them to operate inside the source region.

Another important electrical effect is known as transient radiation effects on electronics (TREE). The radiation emitted by the nuclear explosion can interact with components of electronic circuits to produce ionization or atomic displacements in the semiconductor and insulating materials. The effects range from momentary changes in conductivity to permanent changes in crystal lattices. Semipermanent effects, such as trapped charges in insulating materials, may also occur. TREE may upset memories, produce spurious circuit responses (logic errors), drive circuits into abnormal states, or cause permanent damage. As with most other EMP forms, damage caused by TREE can also occur through secondary effects. Self-inflicted damage may be triggered by abnormal conductivity in a junction that allows stored energy to be released. In addition, one circuit may be caused to instruct another circuit or another part of the system to perform some forbidden act that destroys the circuit or even the system.

10.2.4 Comparison with Lightning.

Lightning and the EMP are often compared because they are both large electromagnetic phenomena and because more people have experienced lightning in some form. Though they are generated by different mechanisms, some aspects of their effects on systems are similar, Both can produce large electrical transients in systems. Both interact with power lines and communication cables to excite systems served by these cables.

However, lightning and HEMP have important differences in their electromagnetic properties and in the way they interact with systems. Lightning can deliver greater energy to a moderate impedance load, such as a power transmission line, than can the HEMP. On the other hand, the HEMP has a larger rate of change of field and induced currents and voltages than lightning, so that coupling phenomena that depend on dE/dt and dB/dt (where E and B are the electric field intensity and magnetic flux density, respectively) are more important for the HEMP excitation than they are for lightning. Because the HEMP appears to be a plane wave at the Earth's surface, its interaction with long insulated conductors, such as overhead lines, can include a "bow wave" effect in which the inducing wave propagates along the line synchronously with the induced current wave, building up very large induced currents. The field produced by lightning decreases as l/r with distance, r, from the source, so that the bow-wave effect is much less prominent for lightning than it is for HEMP.

Perhaps the most important difference between lightning and the HEMP is their area of coverage. Lightning strikes one point in a large system such as a continental communication network, while the HEMP excites the entire network almost simultaneously. Large networks have been designed to cope with single-point outages, such as those that may occasionally occur because of lightning. We have no experience to assist us in determining the effect of a large number of simultaneous outages that might accompany HEMP, and it is virtually impossible to test hypotheses of system reactions with network-scale experiments. Furthermore, the system is not exposed to the HEMP during peacetime; we get no feedback from a "protected" system on the effectiveness of the protection. Thus, protecting large networks from the HEMP usually involves conservative protection of individual parts of the network in the hope that network hardness will follow from component hardness.

10.3 HEMP INTERACTION WITH SYSTEMS. HEMP interaction with systems may be separated into long-line effects and local effects. Long-line effects are the currents and voltages induced on long power lines, communication cable links, or even other conductors, such as pipelines. Some of these HEMP effects may be induced far away and guided to the facility along the conductor. Local effects are the currents and voltages induced directly on the facility shield, building structure, wiring, equipment cabinets, etc. These local effects are very difficult to evaluate analytically because of the complexity of the facility structure, the lack of information on the broadband electrical properties of many of the structural materials, and the extremely large number of interaction paths, facility states, and other complicating factors (10-2), (10-3). On the other hand, the local interactions can be evaluated experimentally with simulated HEMP fields that envelop the facility. The full length of the long lines connected to a facility can rarely be illuminated with simulated HEMP fields; the HEMP interaction with the long lines must usually be estimated analytically and simulated as an external excitation driving at the long-line port.

10.3.1 Current in Long Lines.

10.3.1.1 Long Overhead Lines.

The currents induced on long straight overhead lines parallel to the Earth's surface by HEMP-like events have been analyzed thoroughly (10-4), (10-5), (10-6). If the line is over a perfectly conducting ground plane, the current has a waveform similar to the HEMP early-time waveform, except for a slightly longer risetime for lines more than a few feet high. For imperfectly conducting ground, such as soil, the imperfect reflection of the wave from the ground allows the line to be driven more strongly and for a longer time than if the ground were a good conductor.

The short-circuit current induced in a semi-infinite line (one extending from the observer to infinity) over soil for an exponential pulse of incident field is shown in Figure 10-4. The current is shown for horizontal polarization (dashed line) and vertical polarization (solid line) of the incident field. The curve $\sigma = \infty$ is the current that would be induced in a wire over a perfectly conducting ground; this current is proportional to line height (h), decay time constant (τ), and incident field strength (E_o). The current in Figure 10-4 is normalized by containing the characteristic impedance of the line, the peak field (E_o) and decay time constant (τ) of the incident field, the speed of light (c), and a directivity function (D). The directivity function (D) depends on the azimuth angle (Φ) between the wire and the vertical plane containing the Poynting vector of the incident wave, and on the elevation angle (Ψ) of the Poynting vector of the incident wave. The correction for finitely conducting ground is proportional to the incident field strength, the 3/2 power of the decay time constant, and the inverse square root of the soil conductivity (u).

For a 300Ω line 10 meters (33 feet) above soil having 10^{-3} siemans/meter (S/m) conductivity, an incident 15 kV/m exponential pulse with 250 nanoseconds (ns) decay time-constant will induce a short-circuit current of about 10kA on the line. Vertically polarized waves induce larger currents than horizontally polarized waves, but in the latitudes of the mainland United States, the HEMP fields are predominantly horizontally polarized. Thus, only 15 kV/m was used in this example, even though the peak HEMP field may be much larger than 15 kV/m. More sophisticated analyses that take into account the burst point, the observer point, and their effect on HEMP polarization and waveform give peak short-circuit currents between 5 and 10 kA for the early-time HEMP. The open-circuit voltage induced at the end of the semi-infinite line is the product of the short-circuit current and the characteristic impedance (Z_c). For the 300Ω line in this example, the open-circuit voltage would be 3 megavolts (MV).

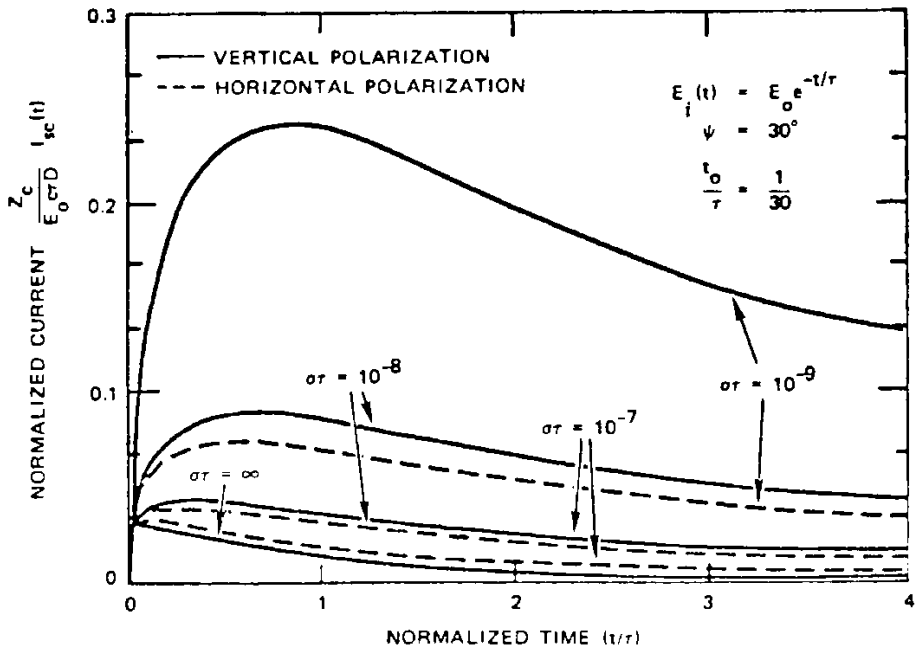

$$D \simeq \frac{\sin\psi \cos\varphi}{1 - \cos\psi \cos\varphi} \quad \text{(vertical)}$$

$$\simeq \frac{\sin\varphi}{1 - \cos\psi \cos\varphi} \quad \text{(horizontal)}$$

Figure 10-4. Short-Circuit Current Induced at the End of a Semi-Infinite Above-Ground Wire by an Exponential Pulse

10.3.1.2 Long Buried Lines.

As noted in 10.3.1.1, imperfectly conducting soil does not completely reflect the incident field; some of the incident wave is transmitted into the soil. This field in the soil can induce current in underground cables, pipes, and other conductors. However, because the velocity of propagation of a wave is much less in soil than in air, the bow-wave effect is almost negligible on buried conductors. Furthermore, the attenuation on buried conductors is greater than on overhead lines because of the proximity of the lossy soil to the buried conductor. For conductors in contact with the soil (i. e., buried bare conductor), the current at any observation point is determined primarily by coupling within one skin-depth of the observation point. Current induced at points farther away is so strongly attenuated by the soil that it adds little to the total current at the observation point.

The current induced in a long buried cable is shown in Figure 10-5 for various depths of burial, as given by a depth parameter $\tau_d = \mu\sigma d^2$, where d is the depth of burial. The current is normalized to the inductance per unit length (L) of the cable, the magnitude of the incident exponential pulse (E_o), the decay time-constant(τ), the soil time-constant ($\tau_e = \varepsilon/\sigma$), and a directivity function (D). The induced current is proportional to the incident field strength (E_o), the 3/2 power of the decay time-constant, (τ), and the inverse square root of the soil conductivity (σ). For a horizontally polarized, vertically incident pulse having E_o = 50 kV/m and τ = 250 ns, a long cable buried near the surface (d = 0) in soil of conductivity 10-3 S/m will have about 2.8 kA induced in it.

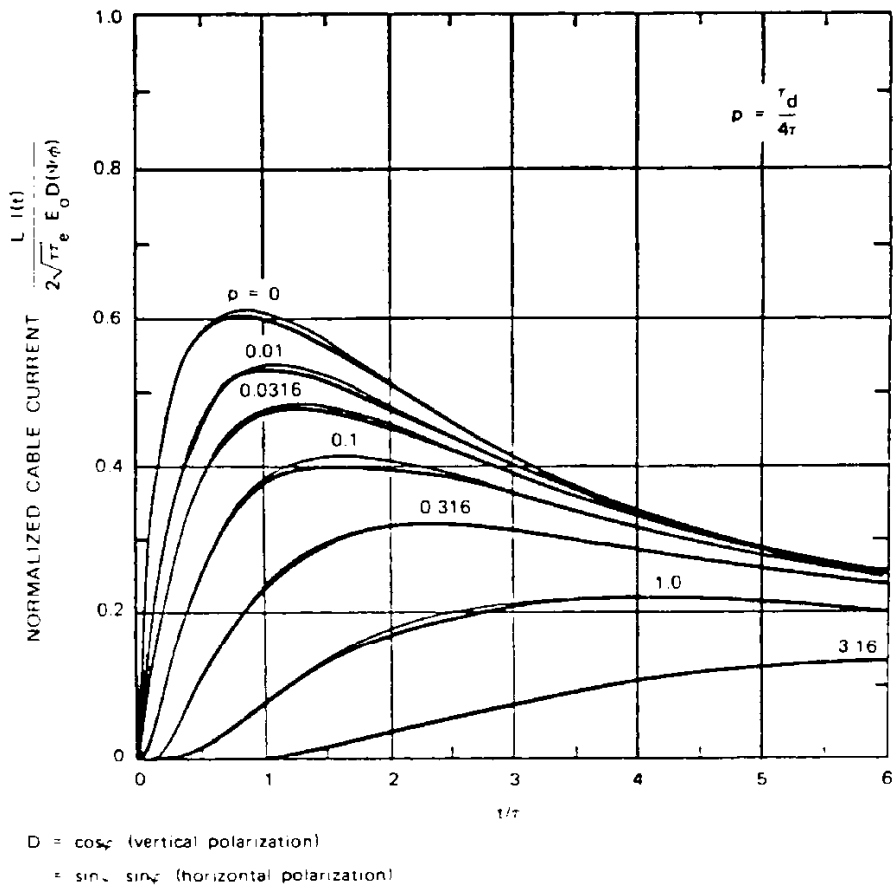

Figure 10-5. The Normalized Current Waveform for Various Values of the Depth Parameter p (Exponential Pulse)

10.3.1.3 Vertical Structures. The HEMP interacts with vertical structures, such as radio towers, waveguides, and cables to overhead antennas, and downleads from power and communication lines in much the same manner as it interacts with horizontal lines, except that it is the vertical component of the electric field that drives the vertical structures. The current induced in a downlead from an overhead power line is shown in Figure 10-6. Because the line is short and the angle of incidence is only 300, little bow-wave effect is observable. The peak current is also limited by the line height in this example; for taller structures, the leading edge of the current wave will continue to rise as the integral of the incident wave. The current will increase with structure height for structures up to a few hundred feet high.

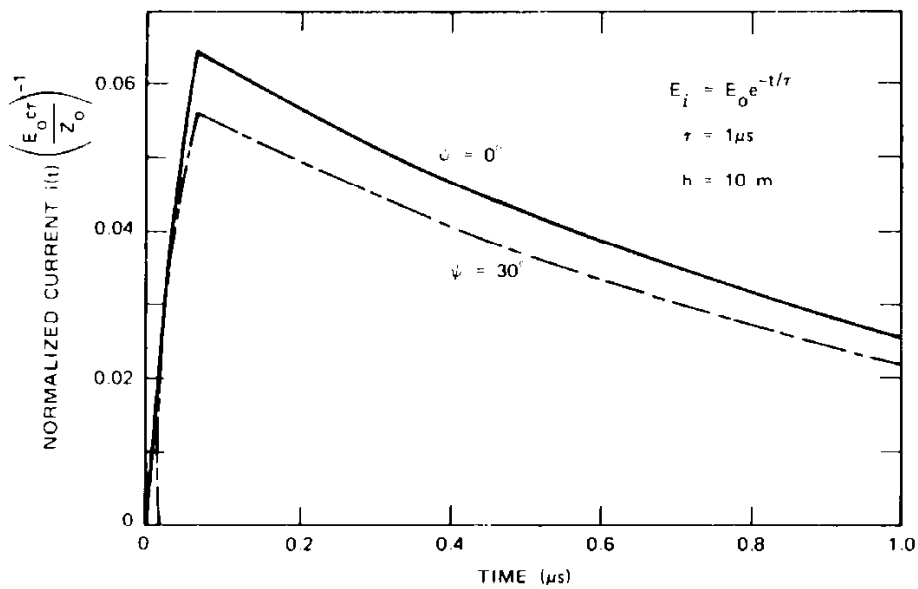

Figure 10-6. Short-Circuit Current Induced at the Base of a Vertical Riser by a Vertically Polarized Incident Wave

10.3.2 HEMP Interaction with Local Structure.

10.3.2.1 Shields. The HEMP fields incident on a closed shield induce surface currents and charge displacements on the outer surfaces of the shield. If the shield is continuous metal (i. e., it has no opening or discontinuities in its surface) and about 1 mm thick, the voltage induced in circuits inside the shield by the HEMP will be very small. Table 10-1 shows the voltage induced in the largest single-turn loop that can be placed inside a spherical shield of 10 meters radius by a zero-rise-time 50 kV/m incident exponential pulse having a 250 ns decay time-constant (10-7). Note that even for a shield as thin as 0.2 mm, the induced voltage is less than 1 V; shields made of workable thicknesses of common metals do not allow significant HEMP interaction with internal circuits. Possible exceptions to this conclusion are those shields that are long and of small cross section, such as the shields on intrasite cables.

Table 10-1

Shielding by Diffusion

Shield Thickness (mm)	Internal Voltage Induced in Loop *		
	Copper 5.8×10^7 S/m	Aluminum 3.7×10^7 S/m	Steel 6×10^6 S/m ($\mu_r = 200$)
0.2	0.34V	0.85 V	0.076 v
1.0	2.6 mV	6.4 mV	1.1 mV
5.0	21.0 µV	51.0 µV	15.0 µV

* Peak voltage induced in a loop by radius 10 m inside a spherical shield or radius 10 m illuminated by a high-altitude EMP (by diffusion through walls only).

10.3.2.2 Penetrating Conductors. Conductors, such as power and signal wires, that pass through the shield, as illustrated in Figure 10-7, may allow very large currents and voltages to be delivered to internal circuits. The current on the wire just inside the shield is about equal to the current just outside the shield; the wire is a 0 dB compromise of the shield. (At high frequencies, the capacitance between the wire and the shield wall may cause some attenuation of the wire current, but this effect is negligible at frequencies such that that $1/j\omega C << Z_c$, where C is the wire-to-shield capacitance and Z_c is the load impedance on the wire. (For nominal values of C = 10 pF and $Z_c = 200\Omega$, f = 80 MHz for a 6-dB loss.) Thus a major concern for HEMP interaction is the penetrating conductor that can guide HEMP-induced waves through shield walls. As discussed above and illustrated in Figure 10-7, the shield is effective in excluding the incident electromagnetic waves, but it has little effect on the waves guided through it on insulated penetrating conductors (10-8].

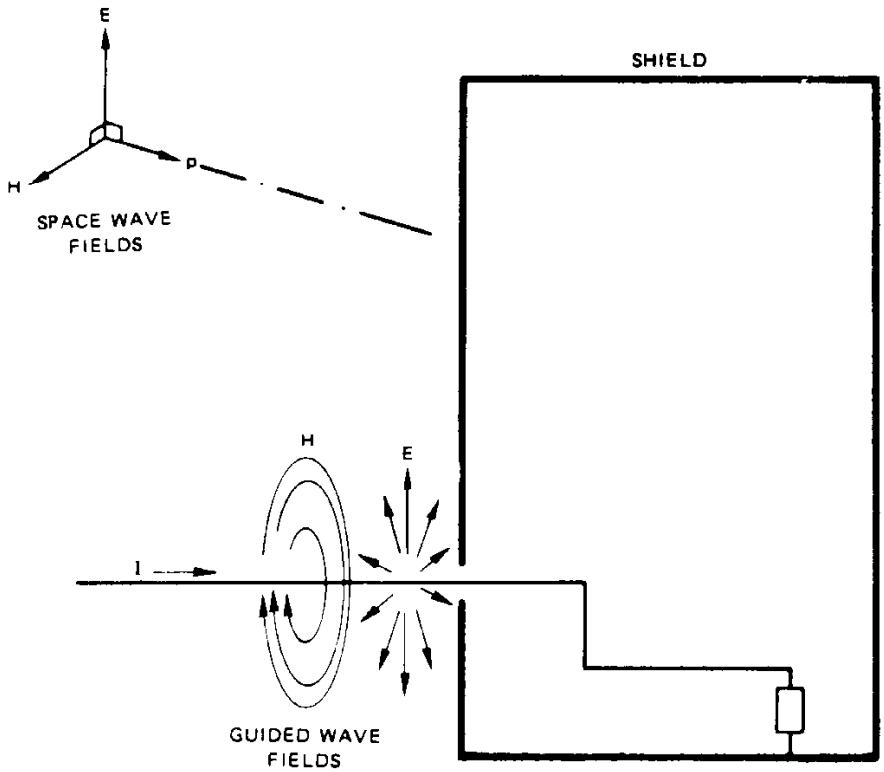

Figure 10-7. Shield to Exclude Electromagnetic Fields

10.3.2.3 Apertures.

Apertures in the shield surface allow the external HEMP-induced fields to penetrate through the shield and interact with internal wiring or other conductors, as illustrated in Figure 10-8. The external electric field (En) associated with the surface charge density ($q = \varepsilon_o E_n$) can induce charge on internal cables as illustrated in Figure 10-8a. The external magnetic field (H_t) which has the same magnitude as the surface current density (J) can penetrate through the aperture to link internal circuits, as illustrated in Figure 10-8b. Since the current induced by the electric field is proportional to dE_n/dt and the voltage induced by the magnetic field is proportional to dH_t/dt, the aperture coupling emphasizes the fast-changing parts, or high-frequency spectrum, of the HEMP-induced transient. However, it is important to recognize that it is in the rate of rise that the HEMP stress is dominant over the other external sources.

The maximum open-circuit voltage induced by a rate of change of external magnetic field of 10^{11} A $m^{-1}s^{-1}$ penetrating a circular aperture 5 cm in radius is over 600 V. This rate of change of the field is characteristic of the HEMP, and the analysis leading to the induced voltage is based on a wire directly across the aperture just inside the shield. Thus, aperture coupling is an important consideration in HEMP interaction analysis. Apertures in facility shields take many forms; they range from open doors and windows to the discontinuities at riveted or bolted joints in the shield.

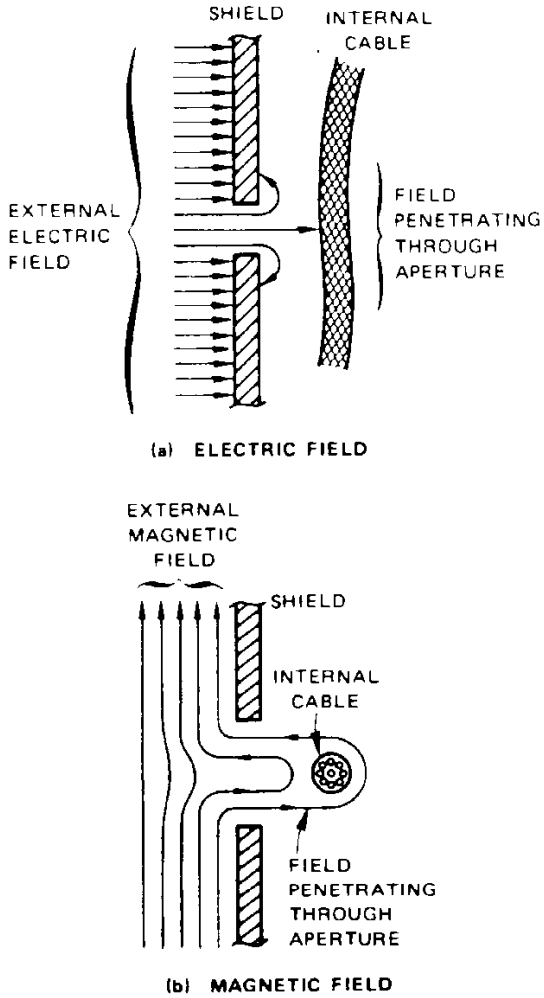

Figure 10-8. Electromagnetic Penetration Through Small Apertures

10.4 PROTECTION AGAINST HEMP.

There are important considerations in designing this protection that affect the value that can be placed on HEMP protection. The HEMP protection adds cost to the facility, and the value received for the added cost is confidence that the facility will survive HEMP. This implies that (1) the protection against HEMP can be verified, and (2) this protection is retained and can be maintained throughout the life of the facility. The protection has low value when it is designed in such a way that it is difficult to verify or maintain. The protection may be difficult to verify when the HEMP-induced stresses inside the facility are large enough to cause spurious arcing or other insulation breakdown. It may also be difficult to verify when it depends on unknown or uncontrolled electromagnetic properties of materials used in the facility. Finally, hardness verification will be difficult if the number of features that must be tested is very large. For example, if the HEMP-induced stress is large deep inside the facility, the number of system states, modes of excitation, stress waveforms, etc., that must be evaluated may be enormous.

Since HEMP does not ordinarily occur during peacetime, degradation of the protection is not evident from peacetime operation of the facility. Therefore, the HEMP protection has greatest value if it is durable. The protection should not be degraded by normal use and maintenance of the facility. The protection should not depend on extraordinary configuration control. It must accommodate facility growth and modification. Components critical to the protection should be few in number, accessible, and testable.

Protecting communication facilities against the HEMP typically consists of developing a closed HEMP barrier about the facility. The barrier consists of a shield to exclude the incident space waves and various barrier elements on the essential penetrating conductors and in the apertures required for personnel and equipment. The number of penetrating wires, apertures, and other features that must be evaluated to verify the HEMP protection is kept as small as possible. In addition, attention is given to the number of system states or configurations for which the protection must be determined. Durability and accessibility of the protection elements are also important.

10.4.1 HEMP Barrier.

10.4.1.1 Shield. The facility-level shield used for protection against HEMP is typically fabricated from welded sheet steel. The thickness is usually selected for ease of fabrication, but in areas where exceptional mechanical abuse is likely, mechanical strength, as well as workability, may be a consideration. Shield assembly is typically accomplished by continuous welding, brazing, hard soldering, or other fused-metal process to minimize the number of discontinuities in the shield (a weld or other fused-metal pint is considered continuous metal).

10.4.1.2 Penetrating Conductors.

Concepts for penetrating conductor treatment are illustrated in Figure 10-9. Penetrating conductors that can be grounded, such as plumbing, waveguides, grounding cables, and cable shields, are bonded to the shield wall at their point of entry by peripherally welding them to the wall or by the use of clamps, collets, etc., that peripherally bond the penetrating conductor to the shield with little or no discontinuity.

Signal and power wires that need not penetrate the shield should not penetrate the shield. Wires that must penetrate the shield must be treated with a barrier element, such as a filter or surge arrester, that closes the barrier above a voltage threshold or outside the passband required for signal or power transmission.

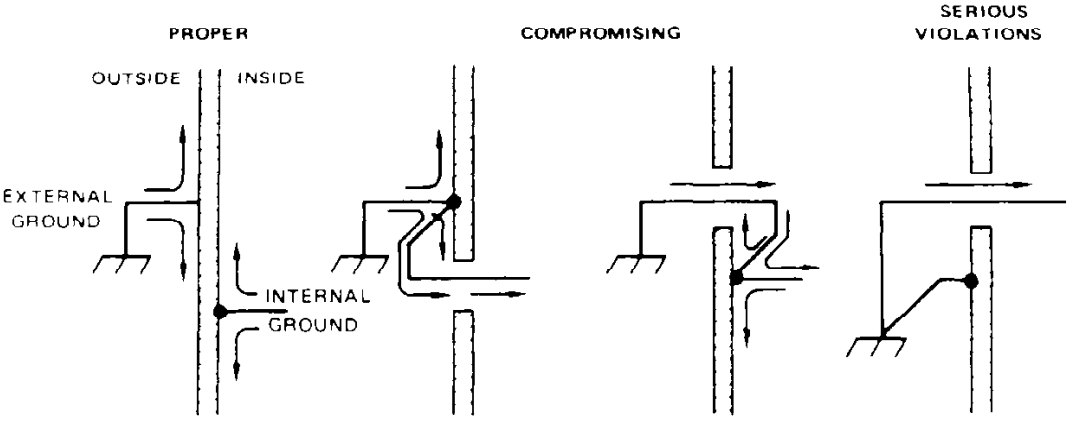

(a) GROUNDING CONDUCTORS

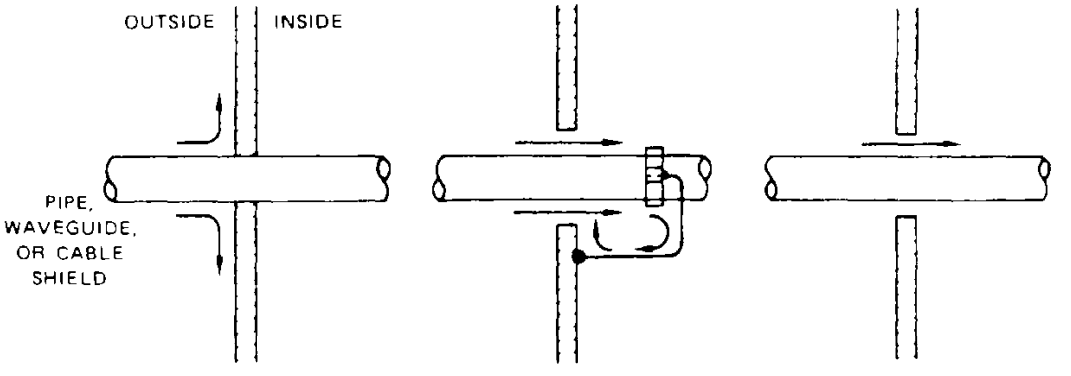

(b) "GROUNDABLE" CONDUCTORS

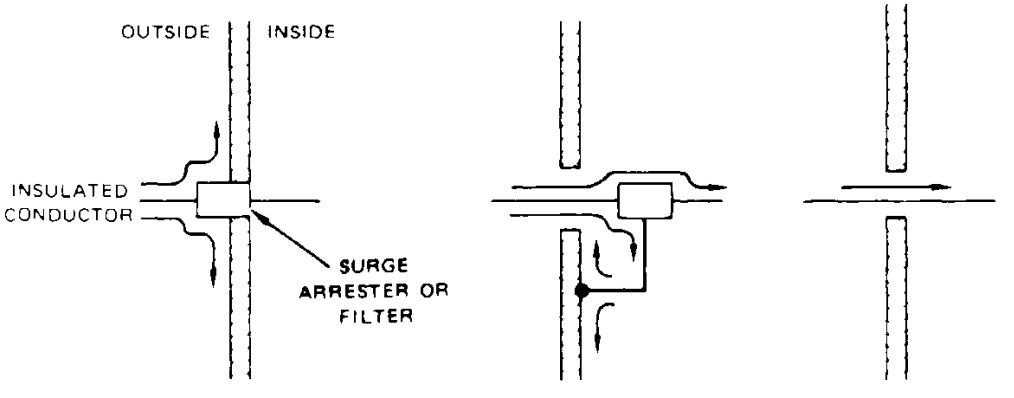

(c) INSULATED CONDUCTORS

Figure 10-9. Shielding Integrity Near Interference-Carrying External Conductors

10.4.1.3 Apertures. No unnecessary openings or discontinuities in the shield should be allowed. Those openings necessary for personnel and equipment loading and for ventilation should be designed to limit electromagnetic field penetration. Openings that must permit air flow or light passage can be made more opaque to HEMP waves by covering them with mesh or, preferably, honeycomb waveguide-beyond-cutoff, as illustrated in Figure 10-10. High traffic entryways can use waveguide-beyond-cutoff tunnels with doors at each end (without the doors, the highest frequencies in the HEMP spectrum can penetrate through a tunnel large enough for personnel to walk through). Where possible, discontinuities in the shield should be eliminated by continuous welding or a similar process. Those that are necessary for equipment installation and maintenance should be electromagnetically sealed with durable bonding techniques, such as resilient RFI gaskets and small bolt spacing. Where access is required infrequently, it might be practical to weld the equipment entry door shut; large cargo doors are large compromises to shielding integrity and difficult to seal effectively and durably.

10.4.2 Allocation of Protection.

10.4.2.1 Amount of Protection Needed.

The amount of protection needed depends to some extent on how failure is defined for the system. For communications facilities, the threshold for failure, or the minimum acceptable performance, may be defined by a maximum allowable outage time or error rate. In some cases, the principal requirement is that the system not damage itself so that it can be restarted and restored to service after an attack involving HEMP. The definition of system failure, or operating requirements, should be prescribed in the system specification; it will be determined by many factors in addition to HEMP.

In determining the amount of HEMP protection required, it is important to be able to define a transient tolerance or susceptibility level for the facility or the equipment in the facility. Since most communications equipment have no transient “withstand” requirement, except perhaps on the power terminals, we cannot obtain the required tolerance from the equipment specification. Nevertheless, it is possible to define a transient stress at or below which the equipment performance will be unaffected. Zero stress certainly satisfies this definition, but more practical values can be found. For example, the equipment tolerates its operating signal levels, and it tolerates the peacetime transient stress inside the facility. Neither of these is a trivial value of stress, and we can be assured that if the HEMP-induced stress is made small compared to either, the presence of HEMP will not cause the equipment to malfunction. Additional information on transient withstand requirements may be found in MIL-STD-461C.

The equipment or internal circuit threshold defined in terms of known peacetime tolerances has several advantages (10-9)

(1) It takes advantage of known equipment “withstand” capability; no more HEMP protection is necessary than that required to reduce HEMP transients to a safe margin below this known tolerance.

(2) It is not necessary to determine the HEMP response of circuits and structural elements inside the equipment; this greatly reduces the complication of hardness verification and maintenance.

(3) It is possible to place all HEMP requirements at the facility barrier, so that concern for interior configuration control and internal states are alleviated.

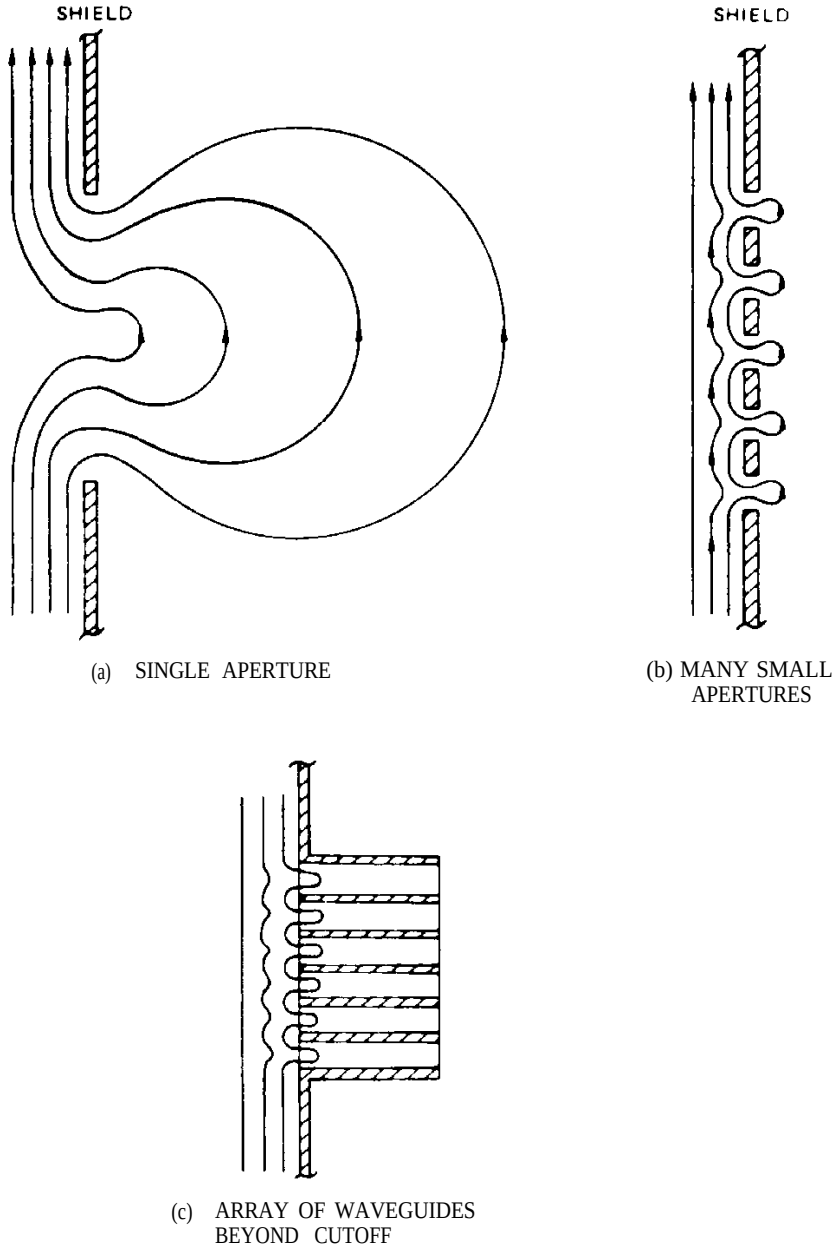

(a) SINGLE APERTURE

(b) MANY SMALL APERTURES

(c) ARRAY OF WAVEGUIDES BEYOND CUTOFF

Figure 10-10. Magnetic Field Penetration of Apertures

10.4.2.2 Where Protection is Applied.

As noted above, HEMP protection must be designed to accommodate hardness verification procedures. The most easily verified protection requires the least number of tests and the least number of assumptions to establish the integrity of the protection. For example, suppose the facility is a node with a 100-pair cable linking it to other parts of a network. Because of unbalanced and nonlinear terminations, there may be 200^2 two-wire stresses and susceptibilities to evaluate at the cable penetration of the facility barrier. Inside the facility, the 200-wire cable may branch into 1000 or more wires and equipment terminals. Thus if the HEMP stress is allowed to be dominant (larger than known peacetime stresses) inside the barrier, 1000^2 transient stresses and susceptibilities must be evaluated (or assumed unimportant). In addition, in the latter case, all the internal interactions between the 1000 wires and other internal circuits must be assessed (or assumed unimportant). Typically, both the number of features to be evaluated and the number of assumptions necessary increase with the depth into the system at which hardness verification is attempted.

Therefore, for facilities whose protection against HEMP has high value (i.e., where confidence in the protection is important), the protection is placed at the system-level barrier, and the protection at this level is sufficient that the HEMP-induced stress is not dominant inside this barrier.

10.4.2.3 Terminal Protection Devices. Problems from HEMP are expected to arise from the antennas and connecting cables, long interconnecting leads and cables between equipments, and the ac power lines. Antennas, connecting cables, and the front-end of the associated communications equipments in particular will be subjected to very large voltages and currents. The protective technique or device must protect the equipment without adversely affecting its performance, and must be capable of withstanding the effects of both EMP-induced transients and other transients in the system. The latter two considerations may severely limit applications of many of the protective devices at rf unless they are modified or used in conjunction with other components.

10.4.2.3.1 Spark Gaps and Gas Tubes. Spark gaps are one of the oldest forms of surge arrester. A spark gap is a pair of electrodes, insulated by air or other gas, spaced so that the gap will break down when the voltage exceeds a specified level. The insulating gas pressure varies from a fraction of an atmosphere to several atmospheres, and the electrode spacing varies from a few millimeters in carbon blocks to several inches in large lightning arresters used for power equipment. Firing voltages range from about 1 kV for some carbon blocks to hundreds of kV for large lightning arresters. Large spark gaps can handle large charge transfers (many coulombs). In the nonconducting state spark gaps behave as open circuits or small capacitances. The spark-gap firing voltage increases with the rate-of-rise of the applied voltage. Thus, for the large rates-of-rise encountered in EMP-induced voltages, the firing voltage may be several times as large as the rated static firing voltage. When spark gaps are used on energized lines, some provision must be made to assure that the discharge will be extinguished. Frequently, a metal-oxide varistor (MOV) is used in series with the spark gap to ensure are extinction after the surge.

Gas tubes are spark gaps with a low-pressure gas so that lower firing voltages can be achieved. Firing voltages below 100 V are available for commercial gas tubes. The gas tubes are generally more limited in their peak current and charge transfer capability than the spark gaps. Gas tubes are used primarily for secondary protection of wire pairs entering a facility from a long external shielded cable, or for exposed intrafacility

wiring. Balanced two-wire models are available that allow ionization from the first discharge to cause immediate conduction of both halves of the tube so that circuit imbalance is minimized. Coaxial models are also available for use on coaxial lines such as antenna feed cables. Gas tubes have small capacitances and virtually no loss in the nonconducting states. The glow state occurs in circuits whose impedance limits the discharge current to less than about 100 mA; the voltage across the tube in this state is about 100 V. The arc state occurs when large currents are caused to flow; the voltage across the tube in the arc state is usually 10 to 20 V. Gas tubes should not be used on energized lines that can sustain the arc or glow discharge.

Spark gaps and gas tubes display a negative dynamic resistance at the firing point, where a decrease in voltage across the device is accompanied by an increase in current through it. This property of spark gaps and gas tubes sometimes leads to unpredicted instabilities in the protected circuits. In addition, the discharge is a sudden change in voltage and current that may shock-excite the protected circuit. It is usually recommended that a linear filter be placed between the device and the protected circuits to minimize the effects of the negative dynamic resistance and shock excitation.

10.4.2.3.2 Metal-Oxide Varistors. MOVs are capable of diverting currents up to tens of kiloamperes and, when packaged and installed to minimize terminal and lead inductance, they are effective for large rate-of-rise transients. Although they are nonlinear, MOVs do not display the negative dynamic resistance and shock excitation characteristics of the spark gaps and gas tubes. Their nonlinearity may produce inter modulation effects in RF circuits. The MOV stops conducting when the applied voltage decreases below the “knee” of the V-I curve. It is ideal for protecting energized lines, since it has no current-extinguishing problems. The MOV typically adds nanofarads of shunt capacitance and megohms of shunt resistance to the protected circuit. It should be used with caution on high-frequency circuits and high-impedance circuits. The maximum energy dissipation capability for large MOVs is tens of kilojoules. Just above the failure threshold, they usually fail as a short circuit or low resistance. However, for energies well above the failure threshold, the devices may be physically destroyed, sometimes explosively.

10.4.2.3.3 Semiconductors. A number of avalanche devices are available for use as surge limiters. The semiconductor devices limit at lower voltages (1 to 100 V) than the MOVs and gas tubes, but they are less tolerant of large peak currents and large energies than the other devices. Peak current ratings up to about 100 A are available. Because the devices themselves may be damaged by transients arriving on external wires and cables, they are not recommended for facility-level use. They may be used to protect equipment inside the facility and circuits that are entirely inside the shielded facility. The semiconductor devices add nanofarads of shunt capacitance to the protected circuit and may aggravate inter modulation problems.

10.4.2.3.4 Filters. Linear filters may also be used as barrier elements on penetrating wires, but at the outer (facility-level) barrier, filters are always used in combination with surge arresters. On power lines, for example, the line filter usually cannot tolerate the peak voltages, so a spark-gap surge arrester is used to limit the voltage, and the filter isolates the interior circuits from the negative dynamic resistance and shock excitation of the spark-gap discharge. The shunt input capacitance of the filter may also be used to reduce the rate-of-rise of the voltage, so that the firing voltage of the surge arrester will be lower. A variety of low-pass, bandpass, and high-pass filters is available for power and signal line protection.

10.4.2.4 Waveguide Penetration of Facility Shield.

10.4.2.4.1 Introduction.

Waveguides, like other external conductors that penetrate the facility shield, can allow transients to propagate into the facility if they are not made continuous with the shield in the manner illustrated in Figure 10-11. Ideally, the waveguide wall should make continuous contact with the facility shield around the entire periphery or the waveguide combination. All of the waveguide current would then flow onto the outer surface of the facility shield; the external transients could only penetrate to the interior by diffusion through the waveguide or facility wall.

In practice this continuous peripheral contact between the waveguide and the shield can be achieved by welding or soldering the waveguide to the wall. Two ways of implementing this connection are illustrated in Figure 10-12, where waveguide feedthrough sections are installed in the facility shield wall (or in a panel that is welded or bolted to the wall). In both cases, a waveguide section with two flange joints is used to allow the internal waveguide signal to pass through the wall but keep the external transient interference outside the facility. This method of treating the waveguide allows some flexibility in the waveguide plumbing inside and outside the facility, since only the feedthrough section is permanently attached to the wall.

For microwave receiving systems operating with very small signals, the fraction of a dB loss in the joints and the possibility of additional loss from distortion about the weld may be undesirable, although the weld distortions can be eliminated by machining or reforming the welding operation. Where these losses are intolerable, some alternate methods of attaching the waveguide to the facility shield are available. In the following sections, two of these methods are described. Although these methods can be used satisfactorily, they are generally less rugged and more susceptible to corrosion and other degradation than the welded feedthrough sections of Figure 10-12.

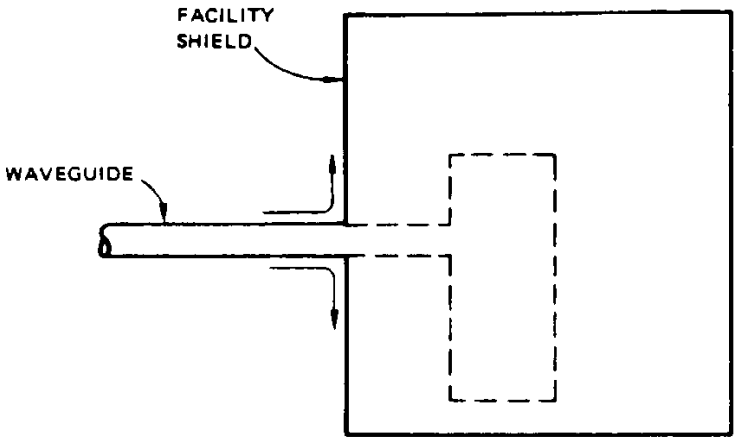

Figure 10-11. Exclusion of Waveguide Current from Interior of Facility

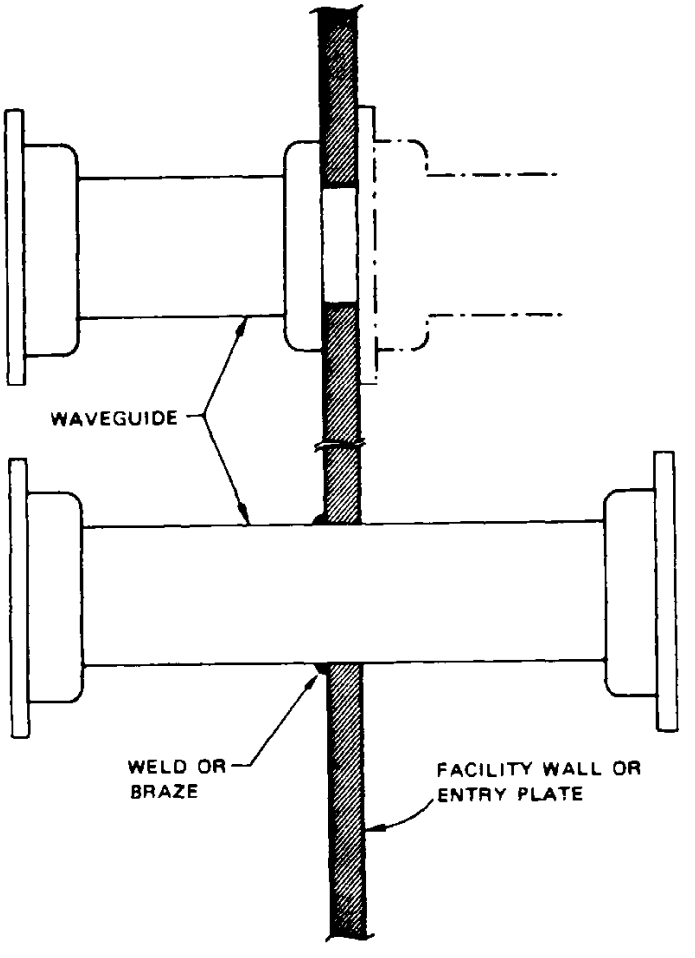

Figure 10-12. Waveguide Feedthroughs

10.4.2.4.2 In-Line Waveguide Attachment. Connecting the waveguide to the shield without the feedthrough section and flange joints requires an in-line connection. In-line connections are somewhat inconvenient, because the waveguide penetration hole in the facility must be fairly accurately located so that it is aligned with the waveguide ports on the internal equipment and the external plumbing. In addition, the hole in the wall must be large enough to pass a waveguide flange, yet must be effectively closed by the attachment mechanism. Finally, the attachment to the waveguide must accommodate misalignment of the waveguide with the axis of the hole. If we further prohibit welding or brazing because of the potential distortion and damage to the internal finish of the waveguide, we are limited to soft soldering, mercury wetting, and clamping to make the electrical connection to the waveguide. Because of its environmental problems and its tendency to dissolve waveguide materials, mercury wetting has not been proposed to make the connection. The use of soft solder bonds also is prohibited by MIL-STD-188-124A on conductive paths subject to lightning or power fault currents. The following procedures are acceptable for bonding waveguides or cables to a designated RF shield, barrier or entrance plate.

10.4.2.4.2.1 Sleeve and Bellows Attachment. In this method, illustrated in Figure 10-13, the connection to the waveguide is made with a snug-fitting sleeve over the waveguide. The sleeve may be installed on the guide before the end fittings are installed, or a split sleeve may be used so that it can be installed at any time. The preferred method of attaching the sleeve to the waveguide is to soft solder the sleeve to the guide with a eutectic lead-tin alloy. For split sleeves, however, it will probably be necessary to provide mechanical support with a clamp, as illustrated in the figure. If even eutectic soldering cannot be tolerated, a clamping alone may suffice, if the sleeve is slitted to allow it to grip the waveguide and if the sleeve and waveguide are both clean and protected so that they remain clean. To help prevent distortion of the waveguide by the clamp, it is recommended that a neoprene or other resilient cushion be used between the clamp and the sleeve. The flange on the sleeve and the bellows and its flanges can be welded together without damaging the waveguide. Details of their design are optional, but the bellows and flanges must be large enough to pass the waveguide flange if the bellows assembly is to be installed in the field after the waveguide is assembled.

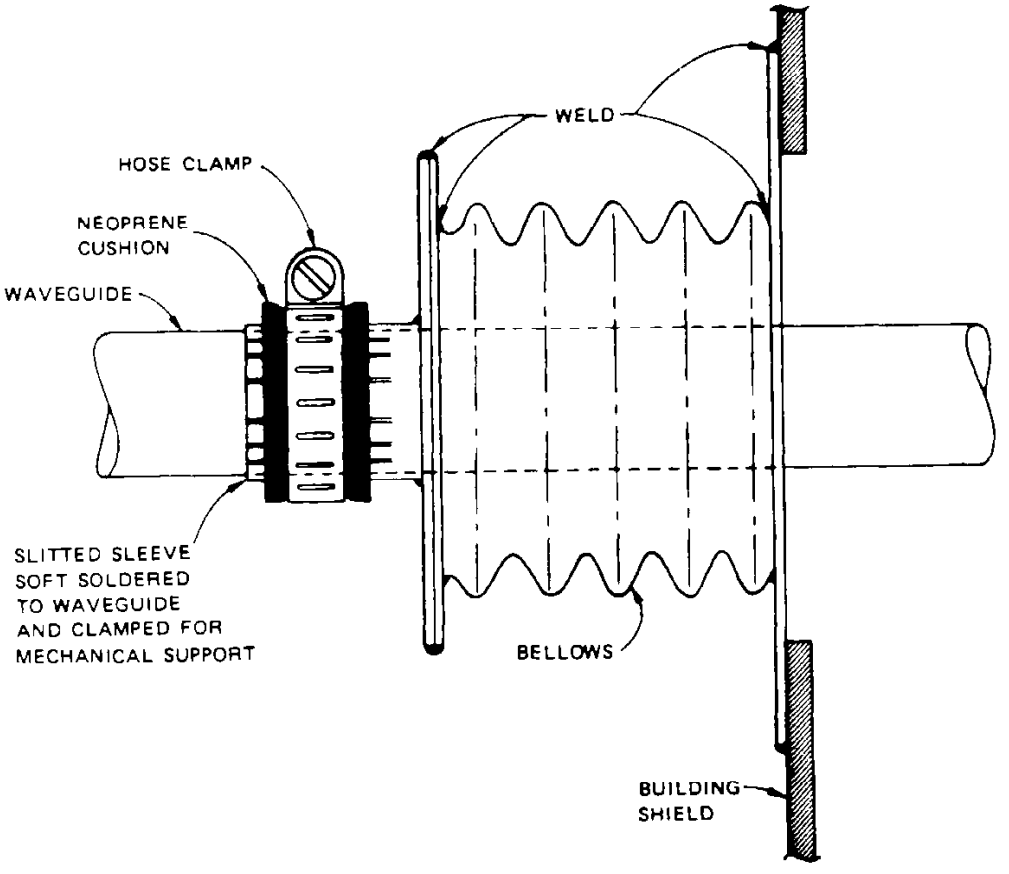

Figure 10-13. Bellows with Slitted Sleeve Waveguide Attachment

10.4.2.4.2.2 Braided Wire Sleeve.

A somewhat less effective, but usually adequate attachment to the waveguide can be made with a braided wire sleeve. As illustrated in Figure 10-14, the braided wire sleeve is necked down and soldered to the waveguide and flared out over a collar on the facility shield wall, where it is also soldered or welded. For mechanical strength, both of these attachments should be reinforced with a hose clamp and cushion, as was used with the rigid sleeve. And as with the rigid sleeve, the clamp may be used without solder at the waveguide if soldering cannot be tolerated, but, as before, both the braid and the waveguide must be clean when assembled and remain clean after assembly.

The braided wire sleeve must expand into a large enough hoop to enable the waveguide end fittings to pass through (unless the sleeve is installed before the fittings are installed). In addition, it is desirable that the sleeve have an optical coverage of at least 85%. Thus, the sleeve design is fairly stringent because large expansion is usually accompanied by low coverage.

For both the bellows and the braided wire sleeve attachments, it is recommended that the attachment mechanism be placed inside the facility wall and that a weatherproof boot or other external seal be installed to keep moisture and other foreign matter out of the attachment.

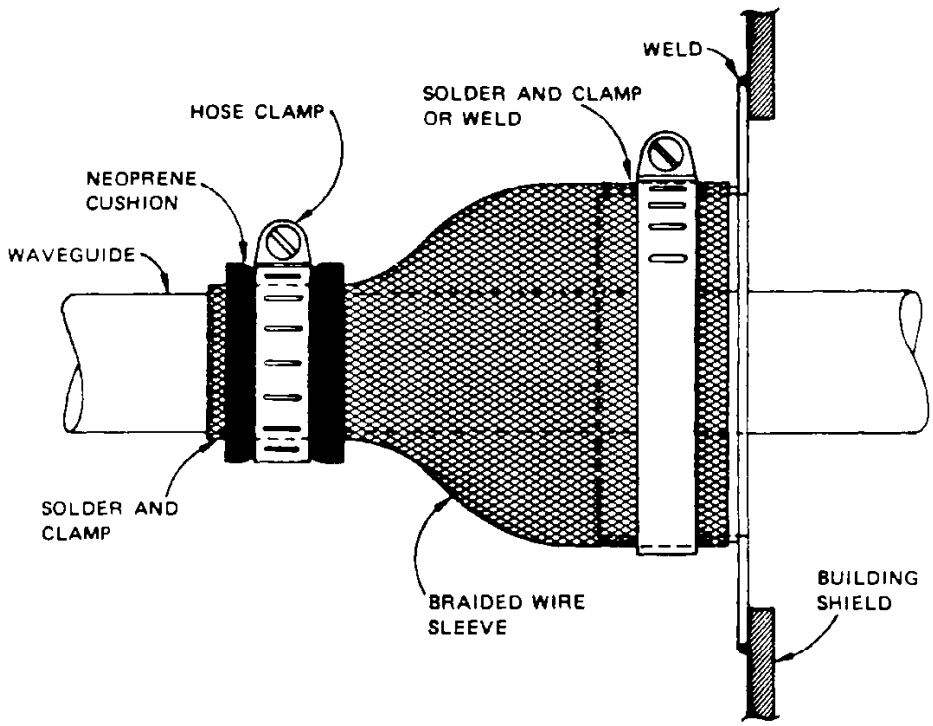

Figure 10-14. Braided Wire Sleeve Clamped to Waveguide

10.4.2.4.2.3 Stuffing Tube for Waveguide. In this method, illustrated in figure 10-1.5, the connection to the waveguide is made with a highly compressed stainless steel wool placed between rigid conduit and the bare waveguide. The conduit must be installed over the waveguide before the end fittings are installed. The follower plugs serve to compress the steel wool and also aid in weatherproofing and protecting the bond from corrosion. After all weather proofing has been completed, the rigid conduit should be bonded to the entry panel or facility shield by welding or brazing.

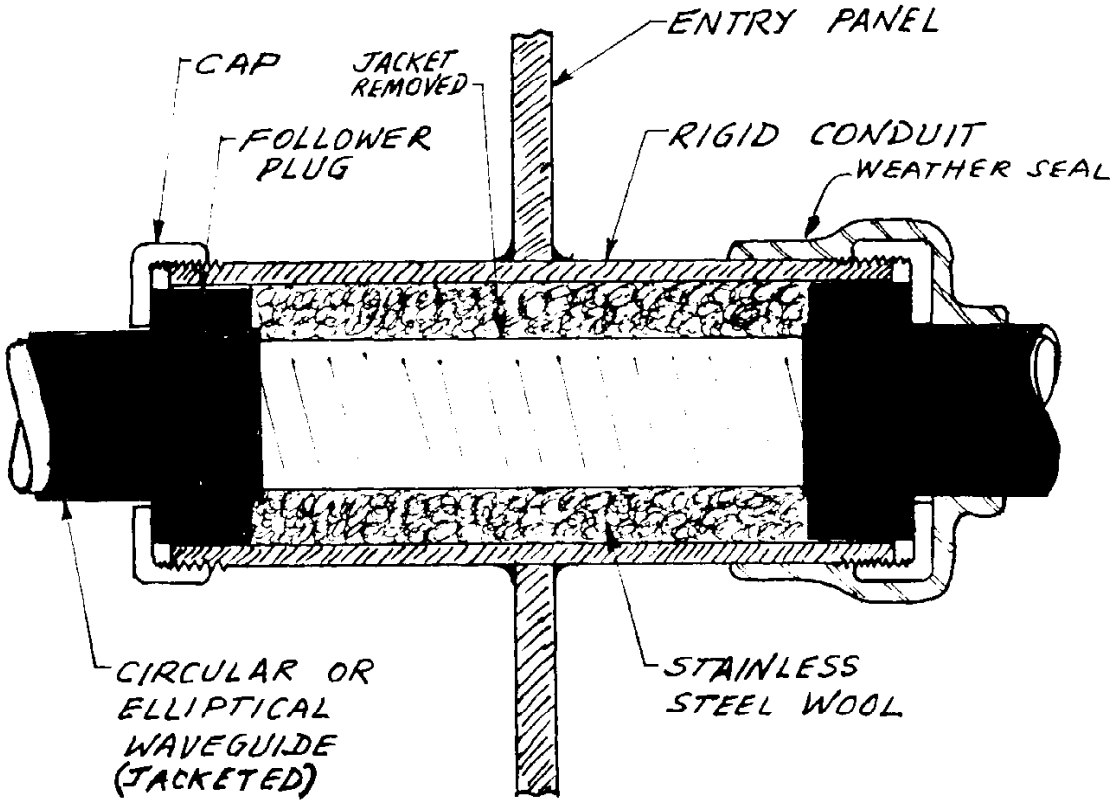

NOTES:

1. Steel wool lightly compressed by follower plugs.
2. Steel wool and waveguide surface must be protected against corrosion.

Figure 10-15. Stuffing Tube for Waveguide

10.5 REFERENCES.

10-1. Longmire, C. L., "On the Electromagnetic Pulse Generated by Nuclear Explosions," IEEE Trans. Electromagn. Compat., Vol EMC-20, pp 3-13, February 1978.

10-2. Baum, C. E., "How to Think About EMP Interaction," Proceedings of the 1974 Spring FULMEN Meeting Air Force Weapons Laboratory, Kirtland AFB New Mexico, pp 12-23, 16-17, April 1974.

10-3. Tesche, F. M., "Topological Concepts for Internal EMP Interaction," IEEE Transactions of Electromagnetic Compatibility, Vol EMC-20, No. 1, pp 60-64, February 1978.

10-4. Lee, K. S. H., "EMP interaction: Principles, Techniques, and Reference Data," Air Force Weapons Laboratory, Kirtland AFB NM, December 1980.

10-5. Vance, E., "Coupling to Cables," DNA Handbook Revision, Ch 11, Stanford Research Institute, Menlo Park, California, December 1974.

10-6. Vance, E., Coupling to Shielded Cables, John Wiley and Sons, New York, 1978.

10-7. Defense Nuclear Agency Report 5433F-1, Unification of Electromagnetic Specifications and Standards Part I - Evaluation of Existing Practices, by E.F. Vance, W. Graf, and J.E. Nanevicz, 31 October 1980.

10-8. Bly, Robert T., Jr and Evangelos, Tonas, The Inside and the Outside Are Not the Same-Experiments Investigations of Ground and Shield Topology. Proceedings of the 1982 IEEE Symposium on EMC.

10-9 Defense Nuclear Agency Report 5433F-2, Unification of Electromagnetic Specifications and Standards Part II - Recommendations for Revisions of Existing Practices, by W. Graf, J.M. Harem, and E.F. Vance.

CHAPTER 11

NOTES

11.1 SUBJECT TERM (KEY WORD) LISTING. Key words contained in Volume I and Volume II of this handbook include:

Grounding
Bonding
Shielding
Facility Ground System
Lightning Protection Subsystem
Fault Protection Subsystem
Signal Reference Subsystem
Earth Electrode Subsystem
Single-Point Grounding
Multipoint Grounding
Equipotential Ground Plane
Air Terminal (Lightning Rod)
Electromagnetic Pulse (EMP)
Lower Frequency Ground
Higher Frequency Ground
Phase Conductor
Grounding Conductor (Green Wire)
Grounded Conductor
Neutral Conductor
Ring Ground
Fall-of-Potential Ground Test
Shielding Effectiveness
Zone (Cone) of Protection
Power System Grounding
Signal Grounding
Facility Shielding
Equipment Shielding
Corrosion
Down Conductor, Lightning
Cathodic Protection

APPENDIX A

GLOSSARY

ABSORPTION LOSS -- The attenuation of an electromagnetic wave as it passes through a shield. This loss is primarily due to induced currents and the associated I^2R loss.

AIR TERMINAL -- The lightning rod or conductor placed on or above a building, structure, tower, or external conductors for the purpose of intercepting lightning.

APERTURE -- An opening in a shield through which electromagnetic energy passes.

BALANCED LINE -- A line or circuit using two conductors instead of one conductor and ground (common conductor). The two sides of the line are symmetrical with respect to ground. Line potentials to ground and line currents are equal but of opposite phase at corresponding points along the line.

BOND -- The electrical connection between two metallic surfaces established to provide a low resistance path between them.

BOND, DIRECT -- An electrical connection utilizing continuous metal-to-metal contact between the members being joined.

BOND, INDIRECT -- An electrical connection employing an intermediate electrical conductor or jumper between the bonded members.

BOND, PERMANENT -- A bond not expected to require disassembly for operational or maintenance purposes.

BOND, SEMIPERMANENT -- Bonds expected to require periodic disassembly for maintenance, or system modification, and that can be reassembled to continue to provide a low resistance interconnection.

BONDING -- The process of establishing the required degree of electrical continuity between the conductive surfaces of members to be joined.

BUILDING -- The fixed or transportable structure which houses personnel and equipment and provides the degree of environmental protection required for reliable performance of the equipment housed within.

CABINET -- A protection housing or covering for two or more units or pieces of equipments. A cabinet may consist of an enclosed rack with hinged doors.

CASE -- A protective housing for a unit or piece of electrical or electronic equipment.

CHASSIS -- The metal structure that supports the electrical components which make up the unit or system.

CIRCULAR MIL -- A unit of area equal to the area of a circle whose diameter is one mil (1 mil = 0.001 inch). A circular mil is equal to $\pi/4$ or 78.54 percent of a square mil (1 square mil = 10^{-6} square inch). The area of a circle in circular mils is equal to the square of its diameter in mils.

CIRCUIT -- An electronic closed-loop path between two or more points used for signal transfer.

COMMON-MODE VOLTAGE -- That amount of voltage common to both input terminals of a device.

COMMON-MODE REJECTION -- The ability of a device to reject a signal which is common to both its input terminals.

CONDUCTED INTERFERENCE -- Undesired signals that enter or leave an equipment along a conductive path.

COPPER CLAD STEEL -- Steel with a coating of copper bonded on it.

COUPLING -- Energy transfer between circuits, equipments, or systems.

COUPLING, CONDUCTED -- Energy transfer through a conductor.

COUPLING, FREE-SPACE -- Energy transfer via electromagnetic fields not in a conductor.

CUTOFF FREQUENCY -- The frequency below which electromagnetic energy will not propagate in a waveguide.

DEGRADATION -- A decrease in the quality of a desired signal (i.e., decrease in the signal-to-noise ratio or an increase in distortion), or an undesired change in the operational performance of equipment as the result of interference.

DOWN CONDUCTOR, LIGHTNING -- The conductor connecting the air terminal or overhead ground wire to the earth electrode subsystem.

EARTH ELECTRODE SUBSYSTEM -- A network of electrically interconnected rods, plates, mats, or grids installed for the purpose of establishing a low resistance contact with earth.

ELECTRIC FIELD -- A vector field about a charged body. Its strength at any point is the force which would be exerted on a unit positive charge at that point.

ELECTROMAGNETIC COMPATIBILITY (EMC) -- The capability of equipments or systems to be operated in their intended operational environment, within designed levels of efficiency, without causing or receiving degradation due to unintentional EMI. EMC is the result of an engineering planning process applied during the life cycle of equipment. The process involves careful considerations of frequency allocation, design, procurement, production, site selection, installation, operation, and maintenance.

ELECTROMAGNETIC INTERFERENCE (EMI) -- Any electrical or electromagnetic phenomenon, manmade or natural, either radiated or conducted, that results in unintentional and undesirable responses from, or performance degradation or malfunction of, electronic equipment.

ELECTROMAGNETIC PULSE (EMP) -- A large impulsive type electromagnetic wave generated by nuclear or chemical explosions.

EQUIPMENT, UNIT OR PIECE OF -- An item having a complete function apart from being a component of a system.

EQUIPMENT GROUNDING -- Attained by the grounding conductor of the fault protection subsystem, and/or bonding to the signal reference subsystem or the structural steel elements of the building.

EQUIPOTENTIAL PLANE -- A grid, sheet, mass, or masses of conducting material which, when bonded together, offers a negligible impedance to current flow. (serves as signal reference subsystem for new facilities)

FACILITY -- A building or other structure, either fixed or transportable in nature, with its utilities, ground networks, and electrical supporting structures. All wiring, cabling as well as electrical and electronic equipments are also part of the facility.

FACILITY GROUND SYSTEM -- The electrically interconnected system of conductors and conductive elements that provides multiple current paths to earth. The facility ground system includes the earth electrode subsystem, lightning protection subsystem, signal reference subsystem, fault protection subsystem, as well as the building structure, equipment racks, cabinets, conduit, junction boxes, raceways, duct work, pipes, and other normally noncurrent- carrying metal elements.

FAR FIELD -- The region of the field of an antenna where the radiation field predominates and where the angular field distribution is essentially independent of the distance from the antenna.

FAULT -- An unintentional short-circuit, or partial short-circuit, (usually of a power circuit) between energized conductors or between an energized conductor and ground.

FIRST SERVICE DISCONNECT -- The necessary equipment (circuit breakers, switches, fuses etc.) located at the point of entrance of power conductors to a building or other structure.

GROUND -- The electrical connection to earth primarily through an earth electrode subsystem. This connection is extended throughout the facility via the facility ground system consisting of the signal reference subsystem, the fault protection subsystem, the lightning protection subsystem and the earth electrode subsystem.

GROUNDED CONDUCTOR -- (Neutral) The circuit conductor that is intentionally grounded (at first service disconnect or power source).

GROUNDING CONDUCTOR -- (Green Wire) A conductor used to connect equipment or the grounded circuit of a power system to the earth electrode subsystem.

HIGHER FREQUENCY GROUND -- The interconnected metallic network (equipotential plane) intended to serve as a common reference for currents and voltages at frequencies above 30 kHz and in some cases above 300 kHz. Pulse and digital signals with rise and fall times of less than 1 microsecond are classified as higher frequency signals.

INTERFACE -- Any electrical connection (encompassing power transfer, signaling, or control functions) between two or more equipments or systems.

ISOKERAUNIC (or isoceraunic) -- Showing equal frequency of thunderstorms.

ISOLATION -- Physical and electrical arrangement of the parts of an equipment, system, or facility to prevent uncontrolled electrical contact within or between the parts.

LIGHTNING PROTECTION SUBSYSTEM -- A complete subsystem consisting of air terminals, interconnecting conductors, ground terminals, arresters and other connectors or fitting required to assure a lightning discharge will be safely conducted to earth.

LOWER FREQUENCY GROUND -- A dedicated, single-point network intended to serve as a reference for voltages and currents, whether signal, control or power, from dc to 30 kHz and some cases to 300 kHz. Pulse and digital signals with rise and fall times greater than 1 microsecond are considered to be lower frequency signals.

MAGNETIC FIELD -- A vector field produced by a continuous flow of charge.

MULTIPOINT GROUND -- More than one path to ground.

NATIONAL ELECTRICAL CODE (NEC) -- A standard governing the use of electrical wire, cable, and fixtures installed in buildings. It is sponsored by the National Fire Protection Association (NFPA-70) under the auspices of the American National Standards Institute (ANSI-CI).

NEAR FIELD -- The region of the field immediately surrounding an antenna where the inductive and capacitive fields predominate. In this region the angular distribution of the field varies with distance from the antenna.

NEUTRAL -- The ac power system conductor which is intentionally grounded on the supply side of the first service disconnecting) means. It is the low potential (white) side of a single phase ac circuit or the low potential fourth wire of a three-phase wye distribution system. The neutral (grounded conductor) provides a current return path for ac power currents whereas the grounding (or green) conductor does not, except during fault conditions.

PENETRATION -- The passage through a partition or wall of an equipment or enclosure by a wire, cable, or other conductive object.

PLANE WAVE -- An electromagnetic wave which predominates in the far field region of an antenna, and with a wavefront which is essentially in a flat plane. In free space, the characteristic impedance of a plane wave is 377 ohms.

RACK -- A vertical frame on which one or more units of equipment are mounted.

RADIATION -- The emission and propagation of electromagnetic energy through space.

RADIATION RESISTANCE -- The resistance which, if inserted in place of an antenna, would consume the same amount of power that is radiated by the antenna.

RADIO FREQUENCY INTERFERENCE (RFI) -- RFI is manmade or natural, intentional or unintentional electromagnetic propagation which results in unintentional and undesirable responses from or perform ante degradation or malfunction of, electronic equipment.

REFLECTING LOSS -- The portion of the transition loss, expressed in dB, that is due to the reflection of power at a barrier or shield. Reflection loss is determined by the magnitude of the wave impedance inside the barrier relative to the wave impedance in the propagation medium outside the barrier.

RF-TIGHT -- Offering a high degree of electromagnetic shielding effectiveness.

SHIELD -- A housing, screen, or cover which substantially reduces the coupling of electric and magnetic fields into or out of circuits or prevents the accidental contact of objects or persons with parts or components operating at hazardous voltage levels.

SHIELDING EFFECTIVENESS -- A measure of the reduction or attenuation in the electromagnetic field strength at a point in space caused by the insertion of a shield between the source and that point.

SIGNAL REFERENCE SUBSYSTEM -- A conductive sheet or cable network/mesh providing an equipotential reference for C-E equipments to minimize interference and noise.

SIGNAL RETURN -- A current-carrying path between a load and the signal source. It is the low side of the closed loop energy transfer circuit between a source-load pair.

STRUCTURE -- Any fixed or transportable building, shelter, tower, or mast that is intended to house electrical or electronic equipment or otherwise support or function as an integral element of an electronics complex.

SUPPORTING STRUCTURES, ELECTRICAL -- Normally nonelectrified conductive structural elements near to energized electrical conductors such that a reasonable possibility exists of accidental contact with the energized conductor. Examples are conduit and associated fittings, junction and switch boxes, cable trays, electrical/electronic equipment racks, electrical wiring cabinets, and metallic cable sheaths.

TRANSDUCER -- A device which converts the energy of one transmission system into the energy of another transmission system.

THUNDERSTORM DAY -- A local calendar day on which thunder is heard.

UNDESIRED SIGNAL -- Any signal which tends to produce degradation in the operation of equipments or systems.

WAVE IMPEDANCE -- The ratio of the electric field strength to the magnetic field strength at the point of observation.

ZONE OF PROTECTION -- (also known as CONE OF PROTECTION) That space that is below and adjacent to a lightning protection subsystem that is substantially immune to direct lightning discharges.

APPENDIX B

SUPPLEMENTAL BIBLIOGRAPHY

PART I. SUBJECT CROSS REFERENCE.

BONDING -- 13, 15, 28, 29, 30, 32, 39, 45, 54, 60, 61, 76, 91, 96, 113, 120, 129, 159, 161, 199, 203, 207, 208.

CATHODIC PROTECTION -- 10, 43, 51, 55, 94, 108, 136, 144, 168, 169, 176.

CORROSION -- 8, 53, 56, 63, 75, 124, 143, 144, 164, 168, 169, 214.

EARTH ELECTRODE SUBSYSTEMS -- 11, 24, 25, 31, 33, 44, 51, 52, 63, 64, 65, 66, 70, 71, 85, 86, 87, 89, 101, 107, 120, 131, 137, 138, 145, 148, 170, 187, 190, 196, 205, 212, 213.

EMP -- 37, 47, 57, 58, 67, 68, 73, 74, 114, 128, 139, 140, 141, 150, 156, 163, 186, 202.

EQUIPMENT SHIELDING -- 3, 6, 7, 9, 14, 35, 36, 40, 41, 46, 49, 78, 83, 84, 90, 97, 99, 103, 109, 112, 115, 116, 122, 127, 133, 134, 135, 146, 151, 152, 153, 158, 159, 172, 173, 174 175, 180, 184, 194, 198, 204, 211.

FACILITY SHIELDING -- 9, 15, 82, 110, 115, 158, 183, 184, 203.

LIGHTNING PROTECTION -- 2, 5, 12, 16, 20, 21, 22, 23, 24, 26, 31, 69, 79, 80, 102, 120, 130, 147, 149, 154, 166, 179, 182, 185, 197, 200, 201, 209.

PERSONNEL SAFETY -- 20, 42, 44, 50, 66, 77, 80, 81, 95, 104, 117, 118, 119, 120, 121, 125, 142, 171, 191, 193.

POWER SYSTEMS GROUNDING -- 1, 4, 17, 18, 19, 34, 38, 62, 72, 92, 93, 95, 98, 100, 105, 106, 111, 117, 120, 123, 126, 132, 155, 160, 162, 165, 167, 177, 178, 181, 188, 195, 210.

SIGNAL GROUNDING -- 27, 42, 48, 49, 59, 72, 88, 109, 120, 159, 189, 192, 198, 203, 204, 206.

PART II. LISTINGS.

1. Adama, A. W. D. and Lintott, A. P., “Digital Programme for the Calculation of Earthing Systems Using Concentric Rings,” De Ingenieur (Hague), Vol 83, No. 20, May 1971, pp E51-56.

2. Adams, Nixon A., “Introduction to Lightning and Other Electrostatic Phenomena,” AWS-TR-224, Air Weather Service, Scott AFB IL, August 1971, AD 730 622.

3. Adams, W. S., "Graphical Presentation of Electromagnetic Shielding Theory," Proceedings of the Tenth Tri-Service Conference on Electromagnetic Compatibility, ITT Research Institute, Chicago IL, November 1964, pp 421-449, AD 615 627.

4. AIEE Committee Report, "Application Guide on Methods of Substation Grounding," AIEE Trans., Vol 73, Pt IIIA, April 1954, pp 271-277.

5. AIEE Committee on Protection Devices, "Correlation of System overvoltage and Systems Grounding Impedances," AIEE Trans., Vol 62, January 1943, pp 17-24.

6. Albin, Arnold L., "Applying Shielded Cables to Reduce Interference," Electronic Design, Vol 10, No. 1, January 1962, pp 48-51.

7. Albin, Arnold L. "Designing Noise Free Enclosure Openings," Electronics, Vol 31, No. 35, August 1958, p 48.

8. Anderson, D. G., "Corrosion," Journal of Electronics and Control, Vol 5, November 1958, pp 443-456.

9. Angelakos, D.J., "Radio Frequency Shielding Properties of Metal Honeycomb Materials and of Wire Mesh Enclosure," Unclassified Proceedings of the Sixth Conference. on Radio Interference Reduction and Electronic Compatibility, Armour Research Foundation of Illinois Institute of Technology (now IITRI), Chicago IL, October 1960, pp 265-280.

10. Appleman, G. and Litrides, S.J., "All Steel Network Ground Substation," Electrical World, Vol 143, May 1955, pp 59-61.

11. Armstrong, H. R., "Grounding Electrode Characteristics from Model Tests," AIEE Trans, Vol 72, Pt III, December 1953, pp 1301-1306.

12. Arrowsmith, E. G., "Lightning Prediction and Protection Techniques," Tor-669(6540)-4, Contract AF 04(695)-669, Aerospace Corporation, El Segundo CA, October 1965, AD 474610.

13. Bailey, J.C. and Gregory P., "Fundamentals of Jointing Processes for Aluminum," Symposium on Aluminum and Its Alloys in Electrical Engineering, Aluminum Development Association, London, May 1957, pp 39-56.

14. Barker, G. and Gray, E., "Preliminary Measurements Related to Procedures for Measuring Systems Susceptibility," Proceedings of the Eighth Tri-Service Conference on Electromagnetic Compatibility, Armour Research Foundation of Illinois Institute of Technology (now IITRI), Chicago IL, October 1962, pp 218-240, AD 298 763.

15. Barnett, J. and Burrows, D., "Interference Problems Due to Structure in High R. F. Fields," Rpt No. C-24-F, Contract AF 30(602)-2691, White Electromagnetic, Inc, Bethesda MD, February 1963, AD 299 257.

16. Beck, Edward, "How and Where to Provide For Lightning Protection," Maintenance Magazine, October 1966, pp 28-31.

17. Bellaschi, P. L., "Impulse and 60-Cycle Characteristics of Driven Grounds," AIEE Trans., Vol 60, March 1941, pp 123-128.

18. Bellaschi, P. L., Armington, R. E., and Snowden, A. E., "Impulse and 60-Cycle Characteristics of Driven Grounds--II," AIEE Trans., Vol 61, June 1942, pp 349-363.

19. Bellaschi, P. L. and Armington, R. E., "Impulse and 60-Cycle Characteristics of Driven Grounds--III, Effect of Lead in Ground Installation," AIEE Trans., Vol 62, June 1943, pp 334-344.

20. Berio, G., "The Use of Ionization in The Air for Lightning Protection," Isotopes and Radiation Technology, Vol 8, No. 2, Winter 1970-71.

21. Beville, J. W., "Multiple Lightning Strokes Change Relay Schemes," Electrical World, Vol 168, No. 23, December 1967, pp 29-31, 73.

22. Bewley, L. V., "Critique of Ground Wire Theory," AIEE Trans, Vol 50, No. 1, March 1931, pp 1-22.

23. Bewley, L. V., "The Counterpoise," General Electric Review, Vol 37, No. 2, February 1934, pp 73-81.

24. Bewley, L. V., "Theory and Tests of the Counterpoise," Electrical Engineering, Vol 53, No. 8, August 1934, pp 1163-1172.

25. Bliamptis, E. E., "A New Method of Determining the Physical Parameters of Large Soil and Rock Samples in Situ," AFCRL-72-0734, Contract CDNA0007 76390101, Air Force Cambridge Research Laboratories, Bedford MA, December 1972, AD 756 830.

26. Bode, D., "Electrical Protection Guide for Land-Based Radio Facilities," Joslyn Electronic Systems, Santa Barbara Research Park, PO Box 817, Goleta CA 93017, 1971.

27. Boise, W.K. and Hunter, E.M., "System Electrical Neutral Grounding," Electrical Light and Power, Vol 21, November 1943, pp 44-49.

28. Bond, N. T. and McGeary, F. L., "Nickel Plating for Improved Electrical Contact to Aluminum," Conference Record of Third Annual Meeting of the IEEE Industry and General Applications Group, Chicago IL, October 1968, pp 375-387.

29. "Bonding and Grounding, Standard for," KSC-STD-E-0012, NASA, John F. Kennedy Space Center, Kennedy Space Center FL 32899, December 1969.

30. Bonwitt, W. F., "An Experimental Investigation of the Electrical Performance of Bolted Aluminum-to-Copper Connections," AIEE Trans, Vol 67, Pt II, 1948, pp 1208-1219.

31. Boyce, C. F., "The Earthing of Telephone Systems with Particular Reference to South Africa," Transactions of the S.A. Institute of Electrical Engineers, Vol 43, December 1952, pp 349-373.

32. Boyer, O.A. and Korges, E., "Connector Performance by Types," AIEE Trans, Vol 75, Pt III, October 1956, pp 907-913.

33. Braine, M. R., "The Siting of Station Earths for Telecommunication Installations," Point-to-Point Telecommunications, Vol 13, No. 1, January 1969, pp 47-56.

34. Bremer, G. D., Johnson, I.B., and Lyon, S. V., "Grounding of Subtransmission Systems," AIEE Trans, Vol 73, Pt III, February 1955, pp 1580-1585.

35. Bridges, J. E., "Study of Low-Frequency Fields for Coaxial and Twisted Pair Cables," Proceedings of the Tenth Tri-Service Conference on Electromagnetic Compatibility, IIT Research Institute, Chicago IL, November 1964, pp 475-495, AD 615627.

36. Brogdon, A. M., Cook, J. C., and Douds, C. F., "A Survey of Interference Reduction Techniques," RADC-TDR-62-84, Contract AF 30(602)-2445, HRB-Singer, Inc, State College PA, June 1962, AD 277 558.

37. Brown, G. L., "Some Aspects of EMP Hardness Assurance," PEM-23, Available from the USAEC Technical Information Center, PO Box 62, Oak Ridge TN 37830.

38. Brown, Harold H, and Gross, Eric T.B., "Practical Experience with Resonant Grounding in a Large 34.5 Kv System," AIEE Trans, Vol 69, Pt II, 1950, pp 1401-1406.

39. Brunot, A.W. and Buckland, F. F., "Thermal Contact Resistance of Laminated and Machined Joints," Transactions of the American Society of Mechanical Engineers, Vol 71, April 1949, pp 253-257.

40. Burruano, S.J., Bailey, E. F., and Cramer S., "Shielding and Potting," Electronics, Vol 27, No. 10, October 1954, p M-23.

41. Carlson, K. W., "The Effect of Weld Defects on RFI Shielding Effectiveness," IAO CE-CERL-73-2, Construction Engineering Research Laboratory, Champaign IL, January 1974, AD 733 716.

42. Carpenter, L.J., "Equipment Grounding for Industrial Plants," Electrical Engineering, Vol 73, No. 3, March 1954, pp 256-260.

43. "Cathodic Protection of Communication Cables," Technical Manual KSC-TM4-275-MI, NASA, John F. Kennedy Space Center, Kennedy Space Center FL 32899, March 1972.

44. Cave, P. W., "Earthing Practice," Electrical Review, Vol 153, No. 15, October 1953, p 793.

45. Cherry, Lloyd B., "Dynamic Resistance Test of Spot Welds," IEEE Trans on Communication and Electronics, Vol 82, May 1963, pp 121-123.

46. Clark, D.B. and Hitchcock, R. D., "Continuous Wrapping of Transmission Line Conductors with High-Mu Tape For Large Radio-Interference Attenuation," Unclassified Proceedings of the Fifth Conference on Radio Interference Reduction and Electronic Compatibility, Armour Research Foundation of Illinois Institute of Technology (now IITRI), Chicago IL, October 1959, pp 560-577.

47. Clark, D.B. and Lassiter, H. A., "Nuclear Electromagnetic Pulse (NEMP) Protection for Communications Facilities and Equipment," 1968 WESCON Proceedings, Vol 12, Pt 4, Session 19/4, IEEE, New York NY.

48. Clifton, Harvey W., "Design Your Grounding System," IEEE Trans on Aerospace, Vol 2, No. 2, April 1964, pp 589-596.

49. Coe, James C., "Electrical Interference in Instrumentation - Its Causes and Remedies (Parts 1 and 2)," ISA Journal, November 1954, pp 49-50 (Part 1), and December 1954, pp 33-35 (Part 2).

50. Coleman, O. K., "Why Ground," Electrical Engineering, Vol 75, No. 5, May 1956, pp 418-424.

51. Coleman, W.E. and Frostick, H. G., "Electrical Grounding and Cathodic Protection at the Fairless Works," AIEE Trans, Vol 74, Pt II, March 1955, pp 19-24.

52. "Comparative Properties of Grounding Electrodes," Engineering Reference Sheet No. 48-5, Electrical World, Vol 129, January 1948, p 72.

53. Compton, K. G., "Electrical Measurements and Their Interpretation In Underground Cable Corrosion Problems," Corrosion, Vol 14, No. 5, May 1958, pp 237t - 244t.

54. Connor, T.J. and Wilson, W.R., "Performance of Electrical Joints Utilizing New Silver Coating on Aluminum Conductors," AIEE Trans, Vol 72, Pt III, August 1953, pp 702-712.

55. "Control of External Corrosion on Underground or Submerged Metallic Piping Systems, Recommended Practice," NACE Standard RP-01-69, National Association of Corrosion Engineers, 2400 West Loop South, Houston TX 77027.

56. "Corrosion Control Aspects of Underground Residential Electrical Distribution Systems," Materials Protection and Performance, Vol 10, No. 1, January 1971, pp 38-40.

57. Dahnke, J. E., "Considerations and Techniques in Allotment of EMP Protection Requirements to Subsystem End Items in Well-Shielded Ground-Based Systems," TRW Inc, San Bernardino CA. Copies available from USAEC Technical Information Center, PO Box 62, Oak Ridge TN 37830.

58. Davidson, G.G. and Hunter, E.T., "Characterization of EMP Protection Devices," ECOM-4128, US Army Electronics Command, Fort Monmouth NJ, July 1973, AD 763886.

59. Demrow, R.I., "Protecting Data from the Ground Up," Electronics, Vol 41, No. 9, April 1968, pp 58-64.

60. Dimarzio, Alfred W., "Behavior of Conductive Epoxy for Shielding and Bonding," Frequency Technology, Aug/Sept 1970, pp 18-23.

61. Dixon, C.R. and Nelson, F. G., "The Effect of Elevated Temperature of Flash-Welded Aluminum Copper Joints," AIEE Trans, Vol 78, Pt II, 1959, pp 491-495.

62. Dorey, F. M., "System Grounding in Industrial Plants," Electrical Engineering, Vol 72, No. 2, December 1953, pp 1098-1103.

63. Drisko, R.W. and Hanna, A.E., "Field Testing of Electrical Grounding Rods," NCEL-TR-660, Naval Civil Engineering Laboratory, Port Hueneme CA, February 1970, AD 702 040.

64. Dwight, H.B., "The Calculation of Resistances to Ground and of Capacitance," Journal of Math Physics, Vol 10, 1931, pp 50-74.

65. Eaton, J. R., "Grounding Electric Circuits Effectively," General Electric Review, Vol 44, Nos. 6, 7, and 8, June 1941, pp 323-327, July 1941, pp 397-404, August 1941, pp 451-456.

66. Elek, A., "Proving the Adequacy of Station Grounds," AIEE Trans, Vol 44, June 1941, pp 323-327.

67. EMP (Electromagnetic Pulse) Preferred Test Procedures, DNA 3286H, Contract No. DNA 001-72-C-0089, IIT Research Institute, 10 West 35th Street, Chicago IL 60616, August 1974, AD 787 482.

68. "EMP Threat and Protective Measures," TR-61, Defense Civil Preparedness Agency, Washington DC 20301, August 1970.

69. Erickson, J., "Lightning and High Voltage Surge Protection for Balanced Digital Transmission Devices," ECOM-4027, US Army Electronics Command, Fort Monmouth NJ, September 1972, AD 752448.

70. Fagan, E.J. and Lee, R. H., "Use of Concrete-Enclosed Reinforcing Rods as Grounding Electrodes," IEEE Trans on Industry and General Applications, Vol IGA-6, No. 4, July/August 1970, pp 337-348.

71. Fawssett, E., et al., "Practical Aspects of Earthing," Journal of the IEE, Vol 87, No. 526, October 1940, pp 357-400.

72. Ficchi, Rocco F., "The Grounding of Electronic Equipment," Proceedings of the Eighth Tri-Service Conference on Electromagnetic Compatibility, Armour Research Foundation of Illinois Institute of Technology (now IITRI), Chicago IL, October 1962, pp 643-669, AD 298 763.

73. Fiegal, H. E., et al., "Development of Design Criteria Relating to NEMP Effects on Power Systems. Part I. Conductor Voltages Causes by Pulse Currents Flowing in a Steel Conduit," Contract No. DA-49-129-ENG-543, General Electric Company, Pittsfield MA, August 1965, AD 734 083.

74. Fiegal, H. E., "Development of Design Criteria Relating to NEMP Effects on Power Systems. Part II. Conductor Voltages Caused by Pulse Currents Flowing in a Conduit," Contract No. DA-49-129-ENG-543, General Electric Company, Pittsfield MA, January 1966, AD 734 084.

75. Fiorito, L. E., "Corrosion Aspects of HV DC on Buried Telephone Plant," IEEE Trans on Power Apparatus and Systems, Vol PAS-87, No. 1, January 1968, pp 35-40.

76. Flattau, W., "Radio Frequency Bonding Study," Report No. AO 1801, Contract NAS8-20055, Documentation Repository, Marshall Space Flight Center AL 35812.

77. Flippen, J. C., "Line Mock Up Aids Safe Grounding Sessions," Electrical World, Vol 170, No. 13, September 1968, p 31.

78. Follett, Roger C. and Beard, Lawrence, "Development of Extended Range Shielded Enclosures," Sprague Electric Company, North Adams MA, Technical Paper TP 69-9, 1969.

79. Foster, S. A., "A Lightning Protection Unit For Use with Industrial Process Control Equipment," IEE Conference Publication, No. 65, 1970, pp 43-45.

80. Golde, R. H., "A Plain Man's Guide To Lightning Protection," Electronics and Power, Vol 15, March 1969, pp 84-86.

81. Golde, R. H., "Protection of Structures Against Lightning," Proc. IEE, Vol 115, No. 10, October 1968, pp 1523-1529.

82. Good, T. M., "A Method of Evaluating The Effectiveness of Radio-Frequency Gasket Materials," Unclassified Proceedings of the Fifth Conference on Radio Interference Reduction and Electronic Compatibility, Armour Research Foundation of Illinois Institute of Technology (now IITRI), Chicago IL, October 1959, pp 601-621.

83. Gooding, J.H. and Glade, H.B., "Shielding of Communications Cables," AIEE Trans, Vol 74, July 1955, pp 378-387.

84. Griffith, David E., "Surface Transfer Impedance of Cable Shields Having a Longitudinal Seam," IEEE Trans on Communication Technology, Vol COM-19, No. 4, August 1971, pp 517-522.

85. Gross, Eric T. B., et al., "Grounding Grids for High-Voltage Stations," AIEE Trans, Vol 72, Pt III, August 1953, pp 799-809.

86. Gross, Eric T.B. and Hollitch, Robert S., "Grounding Grids for High-Voltage Stations - Resistance of Rectangular Grids," AIEE Trans, Vol 75, Pt III, 1947, October 1956, pp 926-935.

87. Gross, Eric T.B. and Wise, Richard B., "Grounding Grids for High-Voltage Stations - Resistance of Large Rectangular Plates," AIEE Trans., Vol 74, Pt III, October 1955, pp 801-809.

88. "Grounding of Instrument Transformer Secondary Circuits," AIEE Trans, Vol 66, 1947, pp 419-420.

89. Gupta, V. P. and Gary, R. L., "Earth Resistance of Various Forms of Electrodes," Proc. IEE, Vol 116, No. 8, August 1969, pp 1487-1492.

90. Haber, F. and Goldhirsh, J., "Studies of Electromagnetic Compatibility of Equipment and Systems," Rpt No. 61-11, Contract Nobsr-85170, Moore School of Electrical Engineering, U. of Pennsylvania, Philadelphia PA, 1961, AD 261 048.

91. Hamada, Yoshia, et al., "Welded Joint and Termination for Aluminum Power Cables," Hitachi Rev., Vol 20, No. 11, 1971, pp 465-471.

92. Harrison, L. H., "The Effect of Reactive Components in the Measurements of Grounding Circuits," AIEE Trans, Vol 72, Pt II, November 1953, pp 340-345.

93. Harrison, L. H., "The Search for Better Frame-Grounding Methods," Coal Age, February 1955, pp 84-87.

94. Headlee, J.E., "Cathodic Protection For Steel Mill Grounding Systems," Iron and Steel Engineer, Vol 31, No. 3, March 1954, pp 113-115.

95. Heddesheimer, H. E., "A Compendium of Grounding Techniques for Personnel and Equipment Protection," AIEE Trans, Vol 76, Pt III, February 1958, pp 1225-1230.

96. Heller, Fred, "Compression Wye Splicing to Insulated Aluminum," AIEE Trans, Vol 73, Pt IIIB, October 1954, pp 1218-1223.

97. Herring, T. H., "A Method for Controlling Airplane Wiring and Equipment Placement to Eliminate A-C Magnetic Field Interference," Proceedings of the Fourth Conference on Radio Interference Reduction and Electronic Compatibility, Armour Research Foundation of Illinois Institute of Technology (now IITRI), Chicago IL, October 1958, pp 412-430.

98. Herring, T. H., "The Electrical Role of Structure in Large Electronic Systems," 1963 Symposium Digest, Fifth National Symposium on Radio Frequency Interference, IEEE, New York NY, June 1963.

99. Herring, T. H., "Controlling Magnetic Field Interference In Wiring," Electrical Manufacturing, Vol 64, No. 4, October 1959, pp 127-129.

100. Hertzberg, Lee B., "The Water Utilities Look at Electrical Grounding," IEEE Trans on Industry and General Applications, Vol IGA-6, No. 3, May/June 1970, pp 278-281.

101. Higgs, P.J., "An Investigation of Earthing Resistances," Journal of the IEE, Vol 68, February 1930, pp 736-750.

102. "High Voltage Lightning Grounding Device," Brief 71-10136, Lewis Research Center, May 1971. Copies available from Technology Utilization Office, NASA, Code KT, Washington DC 20546.

103. Hill, E. L., "The Shielding of Radio Waves by Conductive Coatings," IEE Trans on Antennas and Propagation, Vol 3, No. 2, April 1955, pp 72-76.

104. Hopps, J. A., "Electrical Hazards in Hospital Instrumentation," Proceedings of the 1969 Symposium on Reliability, Chicago IL, January 1969, pp 303-307.

105. Hoopes, J. E., "Modernize Substation Grounding Practice," Electrical World, Vol 150, No. 8, August 1958, pp 66-67.

106. "How Good Are Your System Grounds?" Power, Vol 100, No. 10, October 1956, pp 120-121.

107. Humpheries, J. D., "Earth-Electrode Systems for Large Electric Stations," Proc. IEE, Vol 104, Pt A, October 1957, pp 383-399.

108. Husock, B., "The Effect of Electrical Grounding Systems on Under-Ground Corrosion and Cathodic Protection," AIEE Trans, Vol 79, Pt II, March 1960, pp 5-10.

109. Ida, Edward S., "Reducing Electrical Interference," Control Engineering, Vol 9, No. 2, February 1962, pp 107-111.

110. Jakubee, L.G., Jr, et al., "Preposed Specifications for Electromagnetic Shielding of Enclosures and Buildings," Contract NBY-32220, Genistron, Inc, Los Angeles CA, July 1963.

111. Jensen, Claude, "Grounding Principles and Practices II - Establishing Grounds," Electrical Engineering, Vol 64, No. 2, February 1945, pp 68-74.

112. Jorgenson, C. M., "Shielding in Modern Computer Design," Automatic Control, Vol 9, No. 6, December 1958, pp 46-50.

113. "Junctions in Aluminum Cable," Light Metals, Vol 5, No. 57, October 1942, pp 388-395.

114. Kalab, B., "Analysis of Failure of Electronic Circuits From EMP-Induced Signals," HDL-TR-1615, Harry Diamond Laboratories, Washington DC 20438, August 1973, AD 778 754.

115. Kanellakos, D. P., et al., "New Techniques for Evaluating the Performance of Shielded Enclosures," Unclassified Proceedings of the Fifth Conference on Radio Interference Reduction and Electronic Compatibility, Armour Research Foundation of Illinois Institute of Technology (now IITRI), Chicago IL, October 1959, pp 526-559.

116. Kaplit, M., "Electromagnetic Coupling Between Coaxial Single-Wire, Two-Wire, and Shielded Twisted Pair Cables," Proceedings of the Ninth Tri-Service Conference on Electromagnetic Compatibility, IIT Research Institute, Chicago IL, October 1963, pp 183-192, AD 434 850.

117. Kaufmann, R. H., "Equipment Grounding Is It Really Protecting Your Plant?" Power, Vol 99, No. 2, February 1955, pp 77-80.

118. Kaufmann, R. H., "Hazards In Industrial Electric Systems," Safety Maintenance and Production, Vol 108, No. 2, August 1954, p 26.

119. Kaufmann, R.H., "Now It's Equipment Grounding," Factory Management and Maintenance, Vol 115, No 12, December 1957, pp 150-153.

120. Keller, W. L., "Grounding and Bonding Requirements of Military C-E Facilities for Protection Against Lightning," International Aerospace and Ground Conference on Lightning and Static Electricity, June 1984, Orlando FL, pp 18-1 to 18-20.

121. Kline, R. L. and Friauf, J. B., "Electric Shock, Its Causes and Its Prevention," BuShips Journal, July 1954, pp 4-14.

122. Klingaman, G.W. and Williams, G.H., "Shielding of Dielectric Heating Installation," Electronics, Vol 18, May 1945, pp 106-109.

123. Krida, H. and McCurry, E.T., "A New Grounding and Testing Device for Metal-Clad Switchgear," AIEE Trans., Vol 69, Pt I, 1950, pp 401-415.

124. Kuhn, R.J., "Grounding and Corrosion Protection on Underground Electric Power Cable Sheaths and Oil- or Gas-Filled Pipe Lines," AIEE Trans, Vol 71, Pt III, December 1952, pp 990-993.

125. Lee, R. H., "Electrical Grounding: Safe or Hazardous?" Chemical Engineering, Vol 76, No 16 July 1969.

126. Loucks, W.W. and Lemire, W.A.R., "Transmission and Distribution Grounding in the Hydro-Electric Power Commission of Ontario," AIEE Trans, Vol 70, Pt II, 1951, pp 1493-1499.

127. Madden, Charles, "EMI Shielding with Electrically Conductive Pressure Sensitive Tapes," Proceedings of the Eighth Electrical Insulation Conference, IEEE 68C6-EI, IEEE, New York NY, December 1968, pp 25-27.

128. Marable, J. H., et al., "Effects of Electromagnetic Pulse (EMP) on a Power System," Interaction Note 173. Available through Air Force Weapons Laboratory, Kirtland AFB NM 87117.

129. Marx, C.T., "Some Problems of Aluminum Connection," Electrical Energy, Vol 1, No. 4, December 1956, pp 109-112.

130. McCann, G.D., Beck, E., and Finzi, L.A., "Lightning Protection For Rotation Machines," AIEE Trans, Vol 63, June 1944, pp 319-332.

131. McCrocklin, A.J., Jr and Wenlandt, C. W., "Determination of Resistance to Ground of Grounding Grids," AIEE Trans, Vol 71, Pt III, December 1952, pp 1062-1064.

132. McGreer, T. H., "Grounding of Power Station 4, 160-Volt Auxiliary Systems," AIEE Trans, Vol 76, Pt III, February 1958, pp 1459-1463.

133. Mendez, H.A., "Shielding Theory of Enclosures with Apertures," AFOSR-TR-0100, Contract AFOSR-70-1935, California Institute of Technology, Pasadena CA, December 1973, AD 773 770.

134. Merewether, David E., "Design of Shielded Cables Using Saturable Ferromagnetic Materials, " IEEE Trans on Electromagnetic Compatibility, Vol EMC-12, No. 3, August 1970.

135. Merrel, Edwin J., "Semiconducting Shielding for A-C Power Cable," AIEE Trans., Vol 65, August/September 1946, pp 605-608.

136. Morgan, J. H., Cathodic Protection, Leonard Hill (Books) Limited, London, 1959.

137. Morgan P.D. and Taylor, H. G., "Measurement of the Resistance of Earth Electrodes," World Power, Vol 32, No. 121, January 1934, pp 22-26.

138. Morgan, P.D. and Taylor, H.G., "The Resistance of Earth Electrodes," Proc IEE, Vol 72, June 1932, pp 515-518.

139. Nelson, D. B., "A Program to Counter the Effects of Nuclear Electromagnetic Pulse in Commercial Power Systems," Report No. ORNL-TM-3552 (Pt 1), Oak Ridge National Laboratory, Oak Ridge TN 37830, October 1972. Available from National Technical Information Service, Springfield VA 22151.

140. Nelson, D. B., "Effects of Nuclear EMP on AM Broadcast Stations in the Emergency Broadcast System," Report No. ORNL-TM-2830, Oak Ridge National Laboratory, Oak Ridge TN 37830, July 1971, AD 717 319.

141. "NEMP Protection Inspection Guide for Safeguard TSE Systems and Equipment," HNDDSP-71-42-SE, US Army Corps of Engineers, Huntsville Division, Huntsville AL 35807, May 1971.

142. Nueland, J.G., "Electrical Shock and Reliability Considerations in Clinical Instruments." Proceedings of the 1969 Symposium on Reliability, Chicago IL, January 1969, pp 308-313.

143. Nonken, G.C., et al., "Corrosion of URD Cables," Electrical World, Vol 171, No. 18, May 1969, pp 88-106.

144. Nonken, Gordon C., "Fundamentals of Corrosion and Corrosion Control for Residential Subsurface Transformers," IEEE Trans on Power Apparatus and Systems, Vol PAS-88, No. 3, March 1969, pp 207-218.

145. Nozhevnikov, V.Y., "Grounding Electrotechnical Assemblies Under Permafrost Conditions," Mezhduvedomstvennoe Soveshehanie Po Merzlotovedeniyu 7th, Moscow, 1956, Materialy Po Inzhenernomu Merzlotovedeniyu Nauka, 1959, pp 172-176. Translated by US Joint Publications Research Service for US Army Cold Regions Research and Engineering Laboratory, Hanover NH, 1971, AD 722 221.

146. Oakley, R.J., "Surface Transfer Impedance and Cable Shielding Design," Wire Journal, Vol 4, No. 3, March 1971, pp 44-47.

147. Ouyang, M., "Lightning Protection of Cable-Connected High-Voltage Distribution Substations by Surge Diverters," Proc IEE, Vol 117, No. 8, August 1970, pp 1693-1702.

148. Ouyang, M., "Measurement of the Resistance of an Earth Electrode System Covering a Large Area," Proc IEE, Vol 116, No. 11, November 1969, p 1984.

149. Paterson, H.A. and Hunter, E.M., "Lightning Arrestor Application and System Overvoltages," Electric Light and Power, Vol 19, November 1941, pp 60-64, 66.

150. Peabody, P. B., "Management Plan and Techniques for EMP Protection of Systems," Lockheed Missiles and Space Company Inc, PO Box 504, Sunnyvale CA 94088. Available as PEM-19, Lawrence Livermore Laboratory, Livermore CA 94550.

151. Peach, N., "Cable Shielding Innovations Promise Greater Reliability," Power, Vol 115, No. 9, September 1971, pp 94-95.

152. Pearlston, C. B., "Case and Cable Shielding, Bonding, and Grounding Considerations in Electromagnetic Interference," IRE Trans on Radio Frequency Interference, Vol RFI-4, No. 3, October 1960, pp 1-16.

153. Pfund, E.T., Jr, Russell, J.E., and Suverkrop, Capt Bard, "The Shielding Effectiveness of Concentric High Frequency Transmission Lines," Unclassified Proceedings of the Sixth Conference on Radio Interference Reduction and Electronic Compatibility, Armour Research Foundation of Illinois Institute of Technology (now IIITRI), Chicago IL, October 1960, pp 360-371.

154. Popp, E., "Lightning Protection of Line Repeaters," Record of IEEE International Conference on Communications, Vol 4, 1968, pp 169-174.

155. "Present-Day Grounding Practices on Power Systems," AIEE Trans, Vol 66, 1947, pp 1525-1551.

156. "Protection Instructions, EMP/RFI Protection Information, USAEDH Hardness Program-EMP," HNDDSP-72-145-ED-R, Black and Veatch, Consulting Engineers, Kansas City MO, August 1973.

157. "Providing Protection Against an Electromagnetic Pulse (EMP)," Defense Civil Preparedness Agency, Washington DC 20301.

158. Radford, E. R., "Research Investigations of the Radio Frequency Shielding Effectiveness of Screening Materials," Proceedings of the Second Conference on Radio Interference Reduction, Armour Research Foundation of Illinois Institute of Technology (now IITRI), Chicago IL, March 1956, pp 297-307.

159. Radford, E. R., "RF Interference-Free Design Techniques in Radar Systems," Proceedings of the Third Conference on Radio Interference Reduction, Armour Research Foundation of Illinois Institute of Technology (now IITRI), Chicago IL, February 1957, pp 35-46.

160. "Recommended Grounding Practices for Single-Polarity D-C Structures," AIEE Committee Report, AIEE Trans, Vol 76, Pt III, October 1957, pp 784-790.

161. Reisener, William C., Jr, et al., "Radio Frequency Bonding," AFAL-TR-199, Contract AF 33(615)-1975, Franklin Institute Research Labs, Philadelphia PA, November 1965, AD 474 924.

162. Ricker, E. A., "Automatic Grounding and Air-Break Switches for Protection of Transformer Stations," AIEE Trans, Vol 68, Pt II, 1949, pp 851-857.

163. Robb, J.D., "Coordination of Lightning and EMP Protection in Airborne Systems Design," PEM-29, Lightning and Transients Research Institute, 2531 West Summer Street, St. Paul MN 55113. Available from USAEC Technical Information Center, PO Box 62, Oak Ridge TN 37830.

164. Roberts, Capt. Palmer W., "Improper Welding Systems Cause Corrosion," BuShips Journal, Vol 7, August 1958, pp 7-8.

165. Roberts, Maj L.G.T., "Earthing of Low and Medium Voltage Distribution Systems In Regions of High Soil Resistivity," Royal Engineers Journal, Vol 67, March 1953, pp 16-35.

166. Ruoss, E, and Vorwerk, H.J., "Protecting Open Circuit-Breakers Against Lightning," Brown Boveri Rev., Vol 56, No. 9, September 1969, pp 424-433.

167. Ryabkoua, E. Ya and Annenkov, V. Z., "Study of Counterpoise in Poorly Conducting Soil," USSR Electric Technology, Vol 2, Pergamon Press, London, 1971, pp 133-143.

168. Schaefer, L. P., "Corrosion Can Conquer Your Grounding System," Industry and Power, Vol 71, No. 1, June 1956, pp 20-23.

169. Schaefer, L. P., "Electrical Grounding Systems and Corrosion," AIEE Trans, Vol 74, Pt II, May 1955, pp 75-81.

170. Schahfer, R.M. and Knutz, W. H., "Charts Show Ground Rod Depth For Any Resistance In Advance," Electrical World, Vol 114, No. 16, October 1940, pp 63-65.

171. Schirmer, A.H., "Protective Grounding of Electrical Installations on Customer's Premises," AIEE Trans, Vol 60, Pt I, 1950, pp 657-659.

172. Schreiber, O.P., "Designing and Applying RFI Shields and Gaskets," Electronic Design, Vol 10, No. 20, September 1962, p 62.

173. Schreiber, O.P., "RFI Casketing," Electronic Design, Vol 8, No. 4, February 1960, pp 46-49.

174. Schreiber, O.P., "RF Tightness Using Resilient Metallic Gaskets," Proceedings of the Second Conference on Radio Interference Reduction, Armour Research Foundation of Illinois Institute of Technology (now IITRI), Chicago IL, March 1956, pp 343-359.

175. Schulz, Richard B., Huang, George C., and Williams, Walter L., "RF Shielding Design," IEEE Trans on Electromagnetic Compatibility, Vol EMC-10, No. 1, March 1968, pp 168-176.

176. Schwarz, E.W. and Wainwright, R. M., "Cathodic Protection Circuits," AIEE Trans, Vol 74, Pt II, November 1955, pp 311-315.

177. Schwarz, S.J., "Analytical Expressions for the Resistance of Grounding Systems," AIEE Trans, Vol 73, Pt IIIB, August 1954, pp 1011-1016.

178. Schwarz, S.J., "Let's Look to Station Grounding," Electrical World, Vol 143, No. 18, May 1955, pp 55-58.

179. "Service Experience With Lightning Arresters Under Contaminated Conditions," IEEE Trans on Power Apparatus and Systems, Vol PAS-90, No. 1, January/February 1971, pp 369-382.

180. "Shielding High-Frequency Circuits Can Be Effectively Engineered," Electrical Manufacturing, Vol 38, No. 3, September 1946, pp 134-137.

181. Smith, B.H., "The Right Way to Ground Generator Neutrals," Power, Vol 99, No. 11, November 1955, pp 124-125.

182. Smith, M.N., "Practical Application and Effectiveness of Commercially Available Pulse Voltage Transient Suppressors," Technical Note N-1312, Contract YF53.534.005.01.001, Naval Civil Engineering Laboratory, December 1973, AD 773074.

183. Spring, W.S., "Magnetic Shielding," Electrical Manufacturing, Vol 61, No. 2, February 1958, pp 138-139, 158.

184. Sodaro, J.F., "Shielding, Nomograph," Electronics, Vol 27, No. 5, May 1954, p 190.

185. Sokolov, V. K., et al., "Protection of Communication Cables in Plastic Sheaths from Lightning Strikes," FTD-MT-24-0041-72, Foreign Technology Division, Air Force Systems Command, 1969, AD 750642.

186. Stevens, D.J., "Overall Design Practices, Testing Philosophy and Management Plan in the EMP Hardening Approach for the B-1 Aircraft," PEM-26, Los Angeles Aircraft Division, Rockwell International. Copies available from USAEC Technical Information Center, PO Box 62, Oak Ridge TN 37830.

187. Stratton, L.J., "Grounding Grids for High-Voltage Stations," AIEE Trans, Vol 72, Pt III, August 1953, pp 799-809.

188. Strong, W. F., "Neutral Grounding Methods for Industrial Power Systems," Industry and Power, Vol 58, No. 2, February 1950, pp 90-92.

189. "Study and Evaluation of Radio Frequency Grounding Systems," Contract NBY-17828, Interference Testing and Research Laboratory Inc, Boston MA, 1960, AD 620826.

190. Tagg, C. F., "Measurement of the Resistance of Physically Large Earth Electrode Systems," Proc IEE, Vol 117, No. 11, November 1970, pp 2185-2190.

191. Taussign, Helen B., "Death From Lightning and the Possibility of Living Again," American Scientist, Vol 57, No. 3, Autumn 1969, pp 306-316.

192. Thacker, H. B., "Grounded Versus Ungrounded Low-Voltage A-C Systems," Iron and Steel Engineering, Vol 31, No. 4, April 1954, pp 65-72.

193. Thomson, A. G., "Earthing Electrical Installations," The Chemical Age, Vol 71, No. 1847, December 1954, pp 1198-1200.

194. "Total Shields Solve System Problems," Electronic Design News, May 1963, p 90.

195. Towne, H. M., "Impulse Characteristics of Driven Grounds," General Electric Review, Vol 31, No. 11, November 1968, pp 605-609.

196. Ufer, H. G., "Investigation and Testing of Footing-Type Grounding Electrodes for Electrical Installations," IEEE Trans on Power Apparatus and Systems, Vol 83, No. 10, October 1964, pp 1042-1048.

197. "Unique Variable Resistor Bypasses High-Voltage Spikes," Product Engineering, Vol 43, No. 2, February 1972, p 40.

198. Varone, X. A., "One-Point Ground System with R-F Shielding and Filtering," Electrical Engineering, Vol 79, No. 12, December 1960, pp 1023-1033.

199. Verhiel, Adrian L., "Review of Bonding Practices of Ship-to-Shore Facilities Handling Petroleum Products," IEEE Trans on Industry and General Applications, Vol IGA-5, No. 5, September/October 1969, pp 624-632.

200. Wagner, C.F., McCann, G.D., and Lear, C.M., "Shielding of Substations," AIEE Trans, Vol 61, February 1942, pp 96-99.

201. Walter, B., "On Lightning Protection With a Remote Lightning Rod," NASA TT F-14, 065, National Aeronautics and Space Administration, Washington DC, December 1971, N72-12383.

202. Warner, G.L. and Doskocil, A. C., "EMP Hardening Approach for SAM-D," PEM-35, Raytheon Company, Missile Systems Division. Copies available from USAEC Technical Information Center, PO Box 62, Oak Ridge TN 37830.

203. Weinbaum, B., "ICBM Checkout Equipment Errors Due to Interference," Unclassified Proceedings of the Sixth Conference on Radio Interference Reduction and Electronic Compatibility, Armour Research Foundation of Illinois Institute of Technology (now IITRI), Chicago IL, October 1960, pp 237-255.

204. Weiss, Gerald, "Wiring Design to Avoid Pickup," Product Engineering, Vol 26, No. 11, Product Design Handbook Issue, October 1955, pp 16-19.

205. Weiner, Paul, "A Comparison of Concrete Encased Grounding Electrodes to Driven Ground Rods," IEEE Trans on Industry and General Applications, Vol lGA-6, No. 3, May-June 1970, pp 282-287.

206. Wilson, Paul B., Jr, "Practical Approach to Interference Prediction and Suppression," Electronics, Vol 33, No. 37, September 1960, pp 84-87.

207. Wilson, T. R., "Electric Bonding Requirements for Avoidance of Fuel-Air Explosions," Supplement to IEEE Trans Aerospace and Electronic Systems, Vol AES-3, No. 6, November 1967, pp 590-598.

208. Wilson, T. R., Turner, J. R., and Skene, E. M., "Low Resistance Electric Bonds," Supplement to IEEE Trans Aerospace and Electronic Systems, Vol AES-3, No. 6, November 1967, pp 599-606.

209. Wood, A. B., "Lightning and the Transmission Engineer," Electronics and Power, Vol 15, June 1969, pp 195-200.

210. Wynne, J. G., "The Purpose and Design of a Substation Ground Network," Pulp and Paper Magazine of Canada, Vol 57, No. 3, Convention Issue, 1956, pp 292-298.

211. Yamaguchi, T., "The Shielding Effect of a Pipe Cable," Electrical Engineering in Japan, Vol 88, No. 5, May 1968, pp 25-34.

212. Zaborszky, J., "Efficiency of Grounding Grids with Non-uniform Soil," AIEE Trans, Vol 74, Pt III, December 1955, pp 1230-1233.

213. Zaborszky, J. and Rittenhouse, J.W., "Design Charts for Determining Optimum Ground Rod Dimensions," AIEE Trans, Vol 72, Pt III, August 1953, pp 810-817.

214. Zastrow, O.W., "Direct Currents and Corrosion as Related to AC Electric System Grounding," Direct Current, Vol 2, No. 7, December 1955, pp 183-186.

APPENDIX C

TABLE OF CONTENTS FOR VOLUME II

CHAPTER 1 - NEW FACILITIES DESIGN CRITERIA

Paragraph		Page
1.1	INTRODUCTION	1-1
1.2	EARTH ELECTRODE SUBSYSTEM	1-2
1.2.1	Determination of Site Parameters	1-2
1.2.1.1	Soil Resistivity	1-2
1.2.1.2	Geological Effects	1-5
1.2.1.3	Physical Features	1-5
1.2.1.4	Local Climate	1-5
1.2.2	Design Procedure	1-6
1.2.2.1	Selection of Electrode Configuration	1-6
1.2.2.2	Calculation of Earth Resistance.	1-9
1.2.2.3	Alternate Configurations	1-9
1.2.3	Design Guidelines	1-14
1.2.4	Installation Practices	1-22
1.3	LIGHTNING PROTECTION FOR STRUCTURES	1-23
1.3.1	Principles of Protection	1-23
1.3.2	Integral Protection System	1-23
1.3.2.1	Air Terminals	1-24
1.3.2.1.1	Size and Materials	1-24
1.3.2.1.2	Location	1-24
1.3.2.2	Grounding Conductors	1-33
1.3.2.2.1	Roof Conductors	1-33
1.3.2.2.2	Down Conductors	1-37
1.3.2.3	Fasteners	1-39
1.3.3	Separately Mounted Protection Systems	1-40
1.3.3.1	Mast Type	1-40
1.3.3.2	Overhead Ground Wire Type	1-41
1.3.3.3	Waveguide Installation and Grounding	1-42
1.3.3.4	Cable Installation and Grounding	1-49
1.3.3.5	Lightning-Generated Transient Surge Protection	1-49
1.3.3.5.1	Transient Source and Equipment Damage	1-49
1.3.3.5.2	Minimizing Damage	1-50
1.3.3.5.3	Susceptible Components	1-50
1.3.3.5.4	Frequency of Transient Occurrence	1-51
1.3.3.5.5	Transient Definition, AC Service Conductors	1-51
1.3.3.5.6	Methods for Transient Protection on AC Service Conductors	1-56
1.3.3.5.7	Use of Ferrous Metal Conduit.	1-56
1.3.3.5.8	Use of Overhead Guard Wires.	1-56

TABLE OF CONTENTS (Continued)

CHAPTER 1- NEW FACILITIES DESIGN CRITERIA

Paragraph		Page
1.3.3.5.9	Protection of Underground Cables	1-57
1.3.3.5.10	Buried Guard Wire	1-57
1.3.3.5.11	Secondary AC Surge Arrester.	1-59
1.3.3.5.12	Surge Arrester Installation	1-59
1.3.3.5.13	Operating Characteristics of Surge Arresters	1-60
1.3.3.5.14	Desirable Operating Characteristics for Transient Suppressors	1-67
1.3.3.5.15	Characteristics of Different Types of Surge Arresters	1-67
1.3.3.5.16	Transient Protection for Externally Exposed Equipment Lines	1-73
1.3.3.5.17	Frequency of Transient Occurrence	1-73
1.3.3.5.18	Amplitudes and Waveforms of Occurring Transients	1-73
1.3.3.5.19	Equipment Withstand Levels	1-74
1.3.3.5.20	Protection Methods Against Transients.	1-74
1.3.3.5.21	Enclosing Cable Runs in Ferrous Metal Conduit	1-74
1.3.3.5.22	Transient Suppression	1-75
1.3.3.5.23	Types of Available Transient Suppression.	1-77
1.3.3.5.24	Operating Characteristics of Transient Suppressors	1-77
1.3.3.5.25	Transient Suppressor Packaging Design.	1-78
1.3.3.5.26	Coaxial Cable Shield Connection Through an Entrance Plate	1-78
1.3.3.5.27	Grounding of Unused Wires	1-78
1.3.3.5.28	Transient Suppression for RF Coaxial Lines	1-79
1.3.3.5.29	Equipment-Level Transient Suppression	1-79
1.3.3.6	Lightning Generated Transient Protection Evaluation	1-79
1.3.3.7	Transient Protection	1-80
1.3.3.7.1	Protection Requirement	1-80
1.3.3.7.2	Transient Definition	1-81
1.3.3.7.3	Determination of Equipment Damage (Withstand) Levels	1-82
1.3.3.7.4	Determination of Need for Transient Protection.	1-83
1.3.3.7.5	Minimizing Transient Damage	1-83
1.3.3.7.6	AC Power Input	1-84
1.3.3.7.7	Power Supply Transient Suppression	1-89
1.3.3.7.8	Landline Transient Suppression	1-89
1.3.3.8	Corrosion Control	1-98
1.3.3.9	Joints	1-99
1.3.3.10	Physical Protection	1-99
1.4	FAULT PROTECTIVE SUBSYSTEM	1-99
1.4.1	Purpose	1-99
1.4.2	Equipment Fault Protection Subsystem Composition	1-100

TABLE OF CONTENTS (Continued)

CHAPTER 1 - NEW FACILITIES DESIGN CRITERIA

Paragraph		Page
1.4.3	Configuration of the Equipment Fault Protection Subsystem	1-100
1.4.4	Pipes and Tubes	1-102
1.4.5	Electrical Supporting Structures	1-102
1.4.5.1	Metal Conduit	1-103
1.4.5.2	Cable Trays	1-103
1.4.5.3	Enclosures	1-103
1.4.5.4	Cable Armor	1-103
1.4.5.5	Rotating Machinery	1-103
1.4.6	Power Distribution Systems	1-104
1.4.7	Standby AC Generators	1-104
1.4.8	Equipment Fault Protection Subsystems for Transportable Equipment	1-104
1.4.9	MIL-STD-188-124A and NEC Compliance Evaluation	1-105
1.4.9.1	Measurements	1-105
1.4.9.2	MIL-STD-188-124A and NEC Compliance Inspection	1-105
1.4.9.3	Correction of Deficiencies	1-111
1.5	SIGNAL REFERENCE SUBSYSTEM FOR NEW FACILITIES	1-113
1.5.1	Higher Frequency Network	1-113
1.5.1.1	Multipoint Ground System	1-118
1.5.1.1.1	Types of Equipotential Planes	1-120
1.5.1.1.1.1	Copper Grid Embedded in Concrete	1-120
1.5.1.1.1.2	Equipotential Plane Under Floor Tile or Carpet	1-120
1.5.1.1.1.3	Overhead Equipotential Plane.	1-120
1.5.1.1.1.4	Raised (Computer) Flooring..	1-120
1.5.1.1.1.4.1	Bolted-Grid (Stringer) or Rigid Grid System.	1-125
1.5.1.1.1.4.2	Drop-In or Removable Grid System	1-131
1.5.1.1.1.4.3	Free-Standing, Pedestal-Only or Stringerless System	1-131
1.5.1.1.1.5	Ground Risers	1-131
1.5.1.1.1.6	Equipment Cabinet Grounding	1-131
1.5.2	Lower Frequency Signal Reference Network	1-131
1.6	GROUNDING PHILOSOPHY FOR EQUIPMENTS PROCESSING NATIONAL SECURITY RELATED INFORMATION (RED/BLACK EQUIPMENTS)	1-134
1.7	BONDING PRACTICES	1-140
1.7.1	Application Guidelines	1-140
1.7.2	Surface Preparation	1-142
1.7.3	Bond Protection Code	1-143
1.7.3.1	Jumper Fasteners	1-147
1.7.4	Typical Bonds	1-148

TABLE OF CONTENTS (Continued)

CHAPTER 1 - NEW FACILITIES DESIGN CRITERIA

Paragraph		Page
1.7.4.1	Cable Trays	1-148
1.7.4.2	Tubing and Conduit	1-149
1.7.4.3	Other Examples.	1-149
1.8	SHIELDING	1-154
1.8.1	Establishing Requirements	1-154
1.8.2	Design Guidelines	1-159
1.8.3	Selection of Materials	1-160
1.8.4	Construction Guidelines	1-162
1.9	COMMON-MODE NOISE AND INSTRUMENTATION	1-164
1.9.1	Design Practices	1-171
1.9.2	Instrumentation Considerations	1-172
1.10	EMP PROTECTION	1-172
1.10.1	Earth Connection	1-172
1.10.2	EMP Shield Applications	1-173
1.10.3	EMP Bonding Practices	1-173
1.10.4	Construction Guidelines	1-176
1.11	MILITARY MOBILE FACILITIES	1-177
1.11.1	General Tactical Grounding Requirements	1-177
1.11.l.1	Facility Ground System	1-177
1.11.1.1.1	Earth Ground	1-177
1.11.1.1.1.1	General Earth Electrode Subsystem Requirements	1-177
1.11.1.1.1.2	Earth Electrode Subsystem Types	1-177
1.11.1.1.1.3	Soil Resistance	1-178
1.11.1.1.1.4	Ground Rod Resistance	1-178
1.11.1.1.1.5	Ground Resistance Shells.	1-178
1.11.1.1.2	Power Ground	1-178
1.11.1.1.2.1	Three-Phase Power Distribution System	1-178
1.11.1.1.2.2	Single-Phase Power Distribution System	1-179
1.11.1.1.2.3	DC Power System (2-Wire)	1-179
1.11.1.1.3	Lightning/EMP Protection Subsystem	1-179
1.11.1.1.3.1	Air Terminals	1-179
1.11.1.1.3.2	Terminal Protection Devices	1-182
1.11.1.1.4	Signal Reference Subsystem	1-182
1.11.1.1.5	Fault Protection Subsystem	1-182
1.11.1.2	Measuring Ground Resistance in Tactical Environments	1-182
1.11.1.3	Reducing Ground Resistance in Tactical Environments	1-182
1.11.1.3.1	Existing Facilities	1-182

TABLE OF CONTENTS (Continued)

CHAPTER 1 - NEW FACILITIES DESIGN CRITERIA

Paragraph		Page
1.11.1.3.2	Multiple Electrode System	1-185
1.11.1.3.3	Earth Electrode Subsystem	1-185
1.11.1.3.4	Chemical Treatment	1-185
1.11.2	Detailed Tactical Grounding Requirements	1-185
1.11.2.1	Introduction	1-185
1.11.2.1.1	Training	1-186
1.11.2.1.2	Testing	1-186
1.11.2.2	Stand-Alone Equipment	1-186
1.11.2.2.1	General Description	1-186
1.11.2.2.2	Grounding Procedure	1-186
1.11.2 .2.2.1	Low Resistance Grounds	1-186
1.11.2.2.2.1.1	Existing Facilities	1-186
1.11.2.2.2.1.2	Earth Electrode Subsystem, Single Ground Rod	1-187
1.11.2.2.2.1.3	Earth Electrode Subsystem, Multiple Ground Rods	1-187
1.11.2.3	Stand-Alone Shelter	1-187
1.11.2.3.1	General Description	1-187
1.11.2.3.2	Interconnection of Subsystems	1-187
1.11.2.4	Collocated Military Mobile Equipments	1-187
1.11.2.4.1	General Description	1-187
1.11.2.4.2	Grounding Procedure	1-188
1.11.2.5	Collocated Shelters	1-188
1.11.2.5.1	General Description	1-188
1.11.2.5.2	Grounding Procedure	1-188
1.11.2.5.2.1	Power Ground	1-188
1.11.2.5.2.2	Signal Ground	1-188
1.11.2.5.2.3	Fault Protection Subsystem	1-188
1.11.2.5.2.4	Lightning/EMP Protection	1-189
1.11.2.5.2.5	Collocated Shelters Greater than 8 Meters Apart	1-189
1.11.2.5.2.5.1	Ground Resistance Difference of Less than 150 Ohms	1-189
1.11.2.5.2.5.2	Ground Resistance Difference of Greater than 150 Ohms	1-189
1.11.2.5.2.5.3	Earth Electrode Subsystem	1-190
1.11.2.5.2.5.3.1	Power Ground	1-190
1.11.2.5.2.5.3.2	Signal Ground	1-190
1.11.2.5.2.5.3.3	Safety/Equipment Ground (Greenwire)	1-190
1.11.2.5.2.5.3.4	Lightning/EMP Protection	1-190
1.11.2.6	Fixed Prefabricated Shelters.	1-190
1.11.2.6.1	General Description	1-190

TABLE OF CONTENTS (Continued)

CHAPTER 1 - NEW FACILITIES DESIGN CRITERIA

Paragraph		Page
1.11.2.6.2	Electrical Connection	1-190
1.12	FENCES	1-191
1.12.1	Introduction	1-191
1.12.2	Grounding	1-191
1.12.3	Installation	1-191
1.13	INSPECTION AND TEST PROCEDURES FOR A NEW FACILITY	1-193
1.13.1	Earth Electrode Subsystem	1-193
1.13.2	Lightning Protection Network	1-194
1.13.3	Signal Reference and Fault Protection Subsystems.	1-194
1.13.4	Bonds and Bonding	1-195
1.13.5	Facility Checkout Form	1-196
	Part I Earth Electrode Subsystem	1-196
	Part II Lightning Protection Network	1-197
	Part III Facility Ground System	1-198
	Part IV Bonding	1-199
1.14	REFERENCES	1-200

CHAPTER 2 - EXISTING FACILITIES

2.1	INTRODUCTION	2-1
2.2	UPGRADING	2-1
2.2.1	Drawings	2-4
2.2.2	Facility Survey	2-4
2.2.2.1	Survey Steps	2-4
2.2.2.2	Inspection Procedure	2-5
2.2.2.2.1	Earth Electrode Subsystem	2-5
2.2.2.2.2	Bonds and Bonding	2-10
2.2.2.2.3	Lightning Protection Network	2-13
2.2.2.2.4	Safety Grounding	2-16
2.2.2.2.5	Signal Grounding Practices	2-17
2.2.2.2.6	Ground System Noise Survey	2-17
2.2.2.2.7	Shielding.	2-19
2.2.2.3	Test Procedures	2-19
2.2.2.3.1	Bond Resistance	2-19
2.2.2.3.2	Ground System Noise Current.	2-20
2.2.2.3.3	Differential Noise Voltage	2-22
2.2.2.4	Survey Form.	2-24

TABLE OF CONTENTS (Continued)

CHAPTER 2 - EXISTING FACILITIES

Paragraph		Page
2.2.3	Guidelines for Upgrading	2-33
2.2.4	Expansion of Existing Facilities	2-35
2.2.5	Expansion of Existing Facilities for Higher-Frequency Grounds	2-35
2.3	MAINTENANCE	2-36
2.3.1	Schedules and Records	2-36
2.3.2	Maintenance Procedures	2-36
2.3.2.1	Earth Electrode Subsystem	2-39
2.3.2.2	Lightning Protection Subsystem	2-41
2.3.2.3	Bonding	2-42
2.3.2.4	Fault Protection Subsystem (Safety Ground)	2-43
2.3.2.5	Signal Reference Subsystem (Signal Grounding)	2-44
2.3.2.6	Shielding	2-45
2.3.3	Facility Maintenance Report	2-46
2.3.4	Performance Evaluation Program	2-54
2.4	GROUNDING CONSIDERATIONS FOR CLASSIFIED INFORMATION PROCESSORS (RED/BLACK EQUIPMENTS) INSTALLED PRIOR TO THIS HANDBOOK	2-59
2.4.1	Introduction	2-59
2.4.2	Existing Facilities	2-59
2.4.3	Protection Grounds	2-59
2.4.4	Signal Reference Subsystem	2-60
2.4.5	Signal Filter Ground	2-61
2.4.6	Grounding Precautions	2-61

CHAPTER 3 - EQUIPMENT DESIGN CRITERIA

3.1	INTRODUCTION	3-1
3.2	GROUNDING PROCEDURES	3-1
3.2.1	Signal Grounds	3-1
3.2.1.1	Lower Frequency Equipment..	3-2
3.2.1.1.1	Signal Ground Network Configuration	3-2
3.2.1.1.2	Signal Ground Terminals	3-2
3.2.1.1.3	Color Code	3-3
3.2.1.1.4	Cabinet Bus Bar	3-3
3.2.1.1.5	Isolation	3-4
3.2.1.1.6	Signal Interfacing	3-4
3.2.1.1.7	Signal Grounding	3-6
3.2.1.2	Higher Frequency Equipment	3-12

TABLE OF CONTENTS (Continued)

CHAPTER 3 - EQUIPMENT DESIGN CRITERIA

Paragraph		Page
3.2.1.2.1	Signal Interfaces	3-13
3.2.1.2.2	Cable Connectors	3-13
3.2.1.3	Equipments Containing Both Lower and Higher Frequency Circuits.	3-14
3.2.2	Fault Protection	3-14
3.2.3	Cabinet Grounding	3-16
3.3	BONDING PRACTICES	3-18
3.4	SHIELDING GUIDELINES	3-25
3.4.1	Parts Selection	3-25
3.4.2	Layout and Construction	3-25
3.4.3	Equipment Enclosures	3-27
3.4.3.1	Seams	3-27
3.4.3.2	Penetrations and Apertures	3-28
3.5	COMMON-MODE NOISE CONTROL AND INSTRUMENTATION GROUNDING	3-34
3.5.1	Common-Mode Noise Control.	3-34
3.5.2	Instrumentation Grounding.	3-34
3.5.2.1	Analog Systems	3-35
3.5.2.1.1	Grounded Transducers	3-35
3.5.2.1.2	Ungrounded Transducers	3-38
3.5.2.1.3	Amplifiers	3-38
3.5.2.2	Digital Data Systems	3-40
3.5.2.3	Recording Devices	3-40
3.5.2.3.1	Magnetic Tape Recorders	3-40
3.5.2.3.2	Strip Chart Recorders	3-42
3.5.2.3.3	X-Y Plotters	3-42
3.6	EMP CONSIDERATIONS	3-42
3.7	EQUIPMENT INSPECTION AND TEST PROCEDURES	3-43
3.7.1	Lower Frequency Equipments.	3-43
3.7.2	Higher Frequency Equipments	3-47
3.7.3	Hybrid Equipments	3-47
3.7.4	Installed Equipments	3-47
3.7.5	Fault Protection Subsystem	3-47
3.7.6	Bonding	3-49
3.7.7	Shielding	3-49
3.7.8	Instrumentation System	3-50
3.7.9	EMP Design	3-50
3.7.10	Other Observations	3-50
3.7.11	Inspection Form	3-50
3.8	REFERENCES	3-54

TABLE OF CONTENTS (Continued)

CHAPTER 4 - NOTES

Paragraph		Page
4.1	SUBJECT TERM (KEY WORD) LISTING	4-1

APPENDIX D

NOTE: This appendix is a subjective index of material contained in both volumes of MIL-HDBK-419A. The Roman numeral preceding the page number identifies the volume of interest.

INDEX A

Absorption loss, shield, I: 8-5, 8-8, 8-9, 8-27; II: 1-160, 1-162
- equations for, I: 8-6
- nomograph for, II: 1-161

AC resistance, I: 5-5

Air terminals, I: 3-13; II: 1-24, 1-27 to 1-33, 1-41, 1-179
- height, II: 1-27, 1-28
- location, II: 1-24 to 1-33
- materials, II: 1-24
- also see cone of protection

Amplifiers, grounding of, I: 6-19; II: 3-35 to 3-40

Analog devices, grounding of, II: 3-35

Antenna effects, I: 3-18, 6-14, 6-15
- of groundwires, I: 6-16
- and EMP pickup, I: 10-9
- and lightning induced surges, I: 3-17

Apertures, shield, I: 8-32, 8-41, 10-11, 10-12, 10-15; II: 3-28
- equations for, I: 8-34
- control of leakage through, I: 8-42; II: 3-28

Arctic grounding, I: 2-66
- electrode resistance, I: 2-71
- improve grounding, I: 2-70
- installation and measurements, I: 2-71
- soil resistivity, I: 2-66

Armored cable, I: 8-60; II: 1-103, 1-171, 1-173
- grounding of, II: 1-103
- relative shielding effectiveness of, I: 8-60; II: 1-171

Arrester, surge, I: 3-25, 10-17 to 10-19; II: 1-59 to 1-70

Attractive area, I: 3-10
- definition of, I: 3-10
- how to determine, I: 3-11
- also see effective height and cone of protection

APPENDIX D (Continued)

INDEX B

Balancing, use of, I: 6-23; II: 3-4, 3-7
amplifiers, I: 6-21
signal lines, I: 6-24; II: 3-4, 3-7
also see noise minimization

Body resistance, human, I: 9-1

Bolting, I: 7-14; II: 1-140, 2-10
also see bond, electrical

Bond (and bonding), electrical, I: 7-1 to 7-36; II: 1-78, 1-109, 1-140, 1-195, 1-199, 3-18
area, I: 7-8
assembly, I: 7-10 to 7-17
completion of, I: 7-29; II: 1-140
connectors of, II: 1-140, 3-20, 3-27
contaminants, I: 7-7
definition, I: 7-1
direct, I: 7-4
earth electrode system, in, II: 1-22, 2-5
equipment, II: 3-18
guidelines for, I: 7-36; II: 1-140, 3-18
indirect, I: 7-16
also see bond strap
inspection of, II: 1-195, 2-5, 2-13, 3-49
lightning protection system, in, II: 1-79, 2-13
protection of, I: 7-29; II: 1-143 to 1-146
purposes of, I: 7-1
resistance, I: 7-3, 7-6; II: 1-194, 1-195, 2-10, 2-17, 2-19
shields in, I: 8-33, 8-41; II: 1-162, 3-25
structured, II: 1-140, 2-10
techniques, I: 7-10; II: 1-140
comparison of, I: 7-16
testing of, II: 2-19
torque, I: 7-7; II: 1-141
table of, II: 1-141
washer, use of, I: 7-15
workmanship, I: 7-34

APPENDIX D (Continued)

INDEX B

Bond Protection Code, II: 1-143 to 1-147

Bond strap (or jumper), I: 7-21; II: 1-147 to 1-153, 2-10, 3-18
frequency, effects of, I: 7-19
guidelines for use of, II: l-148 to l-153, 2-10, 3-18
ℓ/b ratio, recommended, I: 7-21

Braided straps, I: 7-21

Brazing, I: 7-11; II: 1-140, 1-142

British Standard Code of Practice, I: 3-13

Buried metals, see incidental electrodes

Bus bar, use of, II: 3-3

APPENDIX D (Continued)

INDEX C

Cabinets, grounding of, II: 1-131, 3-16

Cable routing, II: 1-171
interference control, for, II: 1-171

Cable shields, I: 8-59 to 8-63; II: 1-104, 3-2, 3-4, 3-35, 3-38, 3-49
bonding of, II: 3-8
braid, I: 8-59
conduit as, I: 8-60
grounding of, I: 8-61; II: 1-104, 3-2, 3-35, 3-38, 3-49
installation practices, I: 8-61

Cable trays, II: 1-103, 1-148

Calcium chloride, I: 2-60
also see chemical enhancement

Capacitance coupling, I: 3-21, 6-11

Capacitance, stray, I: 7-23

Cathodic protection, I: 2-63

Chemical enhancement, I: 2-60; II: 1-14, 1-185

Classified Information Processors (RED/BLACK Equipments), II: 1-134, 2-58

Climate, effects of, I: 2-7; II: 1-5, 1-143, 1-144
on bonds, II: 1-143, 1-144
on earth electrode subsystem design, II: 1-5
on soil resistivity, I: 2-5

Common-mode noise, I: 6-17 to 6-23

Common-mode rejection ratio, I: 6-21

Component damage, I: 10-15 to 10-17

INDEX C

Compton electrons, I: 10-l to 10-3

Concrete enclosed electrodes, I: 2-62

Conductive coupling, I: 6-5, 6-19

Conductor length criteria, ground, II: 1-57

Conductor parameters, I: 3-17, 5-1
- ac resistance, I: 5-5
- dc resistance, I: 5-1
- proximity effects, I: 5-10
- reactance, I: 5-7
- also see inductance and skin effect

Conductor routing, see cable routing

Conductor selection, grounding, I: 5-l to 5-19; II: 1-107
- I-beams, I: 5-15
- rectangular bars, I: 5-13
- stranded cables, I: 5-13
- tubular (pipes), I: 5-13

Conduit, I: 8-60; II: 1-56, 1-74, 1-75, 1-103, 1-149, 1-159
- as a shield, I: 8-60; II: 1-159
- grounding of, II: 1-56, 1-75, 1-103

Cone of protection, I: 3-11; II: 1-27 to l-33
- definition of, I: 3-13
- example of, I: 3-13; II: 1-28
- means of determining, II: 1-28, 1-30 to 1-33

Connectors, I: 8-59; II: 1-173, 3-13, 3-20, 3-49
- bonding of, II: 1-173, 3-13, 3-20, 3-49
- shields, I: 8-59

Contaminants, bond, I: 7-7; II: 1-142
- removal of, I: 7-25; II: 1-142

APPENDIX D (Continued)

INDEX C

Convenience outlets, II: 1-104, 3-14, 3-49
grounding of, II: 1-104, 3-14
inspection of, II: 3-49

Copper sulfate, I: 2-60
also see chemical enhancement

Corrosion, I: 7-29 to 7-35; II: 1-98, 1-99, 1-145, 1-146
in bonds, I: 7-30
protection against, I: 7-34; II: 1-98, 1-99, 1-145, 1-146
theory, I: 7-30
also see dissimilar metals

Counterpoise, II: 1-15, 1-19

Coupling, I: 6-1
capacitive, I: 6-11
conductive, I: 6-5
far-field, I: 6-14 to 6-17
free-space, I: 6-6
inductive, I: 6-8
near-field, I: 6-6
radiated, I: 6-14

INDEX D

Remountable enclosures, I: 8-66

Digital data systems, grounding of, II: 3-40

Discrepancy report, major, II: 2-38

Dissimilar metals, I: 7-31; II: 1-143, 1-145, 1-146

Down conductor, lightning, I: 3-17; II: 1-34, 1-37 to 1-39
    location, II: 1-37, 1-39
    routing, I: 3-17; II: 1-37, 1-39
    size, II: 1-34

Drawings, requirements for, II: 2-4, 3-43

APPENDIX D (Continued)

INDEX E

Earth electrode, I: 1-2, 2-1, 2-15; II: l-2 to l-22, 1-193, 1-196, 2-5, 2-39, 2-40
current handling capacity, I: 2-57; II: 1-6
design, II: 1-2, l-6 to 1-14
effective size of, I: 2-58
encasement, I: 2-62
enhancement, I: 2-59
functions of, I: 2-1; II: 1-6
heating, I: 2-57
impulse impedance, I: 2-32; II: 1-6
inspection of, II: 1-193, 2-5
installation practices, II: 1-22, 1-193
measurement, I: 2-35
resistance, I: 2-17; II: 1-9, 1-193
subsystem, I: 1-2; II: 1-193, 1-196
types of, I: 2-15

Earth resistance testing, I: 2-23, 2-35, 2-46; II: 1-9, 1-193, 2-5
fall-of-potential method, I: 2-35
large electrode system for, I: 2-44
three-point method of, I: 2-46

Effective height, I: 3-11
also see cone of protection

Electric dipole, I: 6-15

Electric shock, I: 9-1

Electrical equipment, grounding of, II: 1-104, 1-133

Electrical noise in communication systems, I: 1-4

Electrical noise reduction, I: 1-2

Electrical supporting structures, grounding of, II: 102 to 104

Electrochemical series, I: 7-31

APPENDIX D (Continued)

INDEX E

Electromagnetic interference (EMI), I: 1-4, 8-74, 8-77; II: 1-113

Electromagnetic survey, I: 8-76; II: 1-154, 2-17

EMP (Electromagnetic Pulse), I: 10-l to 10-25; II: l-172 to l-177, 1-187, 1-190, 3-50
- comparison with lightning, I: 10-5
- current in long lines, I: 10-6 to 10-9
- description, I: 10-1 to 10-5
- equipment susceptibility to, I: 10-22
- high-altitude EMP (HEMP), I: 10-5 to 10-25
- protection, I: 10-13 to 10-25; II: 1-172 to 1-177, 1-187, 1-190, 3-50

Enclosures, electrical, II: 1-103, 3-27 to 3-33

Enclosures, shielded, I: 8-63

Epoxy, conductive, I: 7-16

Equipment grounding, II: 3-1 to 3-19
- cabinet, of, II: 3-16, 3-46
- fault protection, for, II: 3-14
- inspection of, II: 3-43
- signal network, II: 3-2

Equipment protection, I: 1-2

Equipment susceptibility, I: 10-15; II: 1-50

Equipotential plane, I: 5-26, 5-27; II: 1-120 to 1-133

Existing facilities, II: 2-1 to 2-54
- expansion or modification of, II: 2-35
- survey of, II: 2-4 to 2-32
- upgrading, guidelines for, II: 2-33

APPENDIX D (Continued)

INDEX F

Facility ground system, II: 1-113, l-l18 to 1-123, 1-199
combined elements, II: 1-121
description of, II: 1-113
structural steel as used in, II: 1-118, 1-120

Facility maintenance report, II: 2-46

Facility survey, II: 2-4, 2-24

Fall-of-potential method, I: 2-35 to 2-46; II: 1-182, 2-6
theory of, I: 2-35

Far-field coupling, I: 6-14 to 6-17

Fasteners, II: 1-39, 1-40, 1-147

Fault protection, I: 1-3, 2-2, 4-1

Faults, electrical, I: 2-2, 4-1; II: 1-6, 3-14
cause of, I: 4-1
protective measures against, I: 4-1; II: 1-6, 3-14

Feeder ground plate, II: 3-47

Field, high impedance, I: 8-15
low impedance, I: 8-10
plane wave, I: 8-13

Filters, I: 6-25, 10-18; II:3-26

Forms, II: 1-195 to 1-200, 2-24 to 2-32, 2-38, 2-46 to 2-53, 3-50 to 3-54
equipment inspection, II: 3-50 to 3-54
facility checkout, II: 1-195 to 1-200
facility maintenance report, II: 2-46 to 2-53
facility survey, II: 2-24 to 2-32
major discrepancy report, II: 2-38

Four-probe method, I: 2-15; II: 1-2 to 1-5
also see resistivity, soil

Frost line, II: 1-6

APPENDIX D (Continued)

INDEX G

Galvanic series, I: 7-31

Gaskets, RF, I: 8-45; II: 1-162, 3-20, 3-22, 3-27, 3-49

Geological factors, II: 1-5

Glass, conductive, I: 8-52; II: 1-164

Ground fault interrupter (GFI), I: 4-2

Ground, floating, I: 5-15

Ground grid (or mesh), I: 2-15, 2-27, 2-33, 2-55, 5-27; II: 1-8

Ground, multipoint, I: 5-24 to 5-28; II: 1-120

Ground network configuration, I: 5-18

Ground network isolation, I: 5-28; II: 3-4

Ground rods, I: 2-15, 2-23, 2-27, 2-33, 2-48; II: 1-8 to 1-22, 1-178
- arrays of, I: 2-27; II: 1-12
- parallel, I: 2-23; II: 1-12
- placement of, II: 1-14 to 1-19
- resistance, equations for, I: 2-17; II: 1-9, 1-178
- resistance, nomograph of, II: 1-11
- selection of, II: 1-9 to 1-15
- sizes of, I: 2-15
- spacing of, I: 2-15
- step voltage of, I: 2-48

Ground, single-point, I: 5-19 to 5-24; II: 3-43

Ground system, I: 1-2

Grounding, electrical power system, I: 1-3; II: 1-179, 2-16
- single-phase, I: 4-4; II: 1-179
- three-phase, I: 4-4; II: 1-178

INDEX G

Grounding safety, I: 1-5

Grounding, signal, I: 5-1 to 5-32; II: 1-113 to 1-133, 1-185 to 1-188, 2-17, 2-31, 3-1, 3-43
- equipment in, II: 3-1
- facilities, in, II: 1-113
- network configurations, I: 5-18 to 5-31; II: 1-113, 1-186, 1-187, 2-17, 2-31
- purposes of, I: 5-1

Guards (down conductor), II: 1-41, 2-13

Guidelines for
- bonding, I: 7-36; II: 1-148 to 1-151, 1-173, 1-188, 1-195
- earth electrode subsystem design, I: 1-14 to 1-22
- earth electrode subsystem installation, II: 1-22
- EMP protection, I: 10-13 to 10-25; II: 1-173, 1-188, 3-42
- equipment inspections, II: 3-43
- facility inspections, II: 1-195
- facility upgrading, II: 2-1, 2-33 to 2-37
- lightning protection, II: 1-23 to 1-46
- personnel safety, I: 9-2
- shielding, I: 8-54; II: 1-159

INDEX H

Hemispherical electrodes, I: 2-8 to 2-16

HEMP (High-Altitude EMP), I: 10-5 to 10-25
- protection against, I: 10-13 to 1-25

Higher frequency grounding, I: 5-30, 5-31; II: 1-113 to 1-132, 1-194, 3-12, 3-47
- equipment, in, II: 3-12, 3-47
- facilities, in, I: 5-31; II: 1-113
- network configurations, I: 5-30

Honeycomb, see waveguide-below-cutoff

Horizontal earth electrodes, I: 2-15, 2-23, 2-24; II: 1-8

Hybrid equipments, II: 3-47

INDEX I

Incidental electrodes, I: 2-53, 2-55; II: 1-8, 1-15

Inductance, I: 5-7, 7-17, 7-19 to 7-25

Inductive coupling, I: 6-8 to 6-10

Inspection procedures, II: l-193 to l-200, 2-l, 2-39 to 2-53, 3-43
- equipment, II: 3-43
- existing facilities, II: 2-1
- maintenance, II: 2-39 to 2-53
- new facilities, II: 1-193 to 1-200

Instrumentation, grounding of, II: 1-172, 3-34, 3-49

Instrumentation, test, II: 2-19 to 2-23

Interfacing, signal, II: 3-4,3-13

Interference coupling, I: 6-1

Interference reduction, see electromagnetic interference

Isolation, ground network, I: 5-28; II: 3-4

Isokeraunic, I: 3-4 to 3-11

INDEX J

Jumper, see bond strap

APPENDIX D (Continued)

INDEX L

Labels, ground network, II: 3-3, 3-47

Laser hazards, I: 9-5

Layered earth, I: 2-32 to 2-36

Let-go current, I: 9-2

Lightning, I: 1-2, 2-1, 3-1 to 3-27; II: 1-23 to 1-43, 1-49, 1-197, 2-13, 2-41
- cloud to cloud, I: 3-1
- cloud to ground, I: 3-1, 3-3
- cone protection, I: 3-11
- description of, I: 3-1, 3-13 to 3-15
- effects of, I: 3-13 to 3-25
- flash parameters, I: 3-13
- net work inspection procedures, II: 1-197, 2-13, 2-41
- personnel hazards, I: 2-5, 2-47, 3-25
- protective measures, I: 3-15, 3-25; II: 1-23 to 1-43, 1-49
- strike prediction, I: 3-4 to 3-11
- triggered, I: 3-4

Lightning discharge, I: 2-1

Lightning protection code, I: 3-13, 3-27

Lightning protection subsystem, I: 1-2

Lightning rods, see air terminals

Lower frequency grounding, I: 5-29; II: 3-2
- equipment in, II: 3-2
- facilities in, I: 5-29
- network configuration, I: 5-29

INDEX M

Magnesium sulfate, I: 2-60
also see chemical enhancement

Maintenance, II: 2-36 to 2-58
procedures, II: 2-36, 2-39 to 2-47
records, II: 2-36
report form, II: 2-46 to 2-53
schedules, II: 2-36

Master Labeled Protection System, I: 3-27, 7-14; II: 2-13

Masts (lightning) protective, II: 1-23, 1-40 to 1-43

Metal framework, earth electrode, I: 2-16

MIL-C-5541, II: 1-145, 1-146

MIL-E-45782B, I: 8-63

MIL-STD-285, I: 8-73

MIL-STD-462, I: 8-73

MIL-STD-1377, I: 8-73

MIL-STD-10727, II: 1-145, 1-146

Mobile facilities, grounding of, II: 1-177 to 1-190

APPENDIX D (Continued)

INDEX N

National Electric Code (NEC), I: 2-2, 2-5, 2-75, 3-21; II: 1-103, 1-104, 1-105, 2-10, 2-13, 3-14, 3-47

Near-field coupling, I: 6-6

Noise, I: 1-2, 2-6, 6-3, 6-7, 6-17 to 6-25
- circuit, I: 6-3, 6-7
- common-mode, I: 6-17 to 6-23
- minimization, I: 6-23 to 6-25
- also see electromagnetic interference

Noise reduction, I: 2-2

Noise survey, II: 2-17

Nomograph
- bolts, torque on, I: 7-15
- ground rod resistance, of, II: 1-11
- shield absorption loss, of, II: 1-161
- shield electric field reflection loss, of, II: 1-166
- shield magnetic field reflection loss, of, II: 1-165
- shield plane wave reflection loss, of, II: 1-167
- skin effect, for, I: 5-8

Nuclear EMP effects, I: 10-1 to 10-25

INDEX O

Oppositely induced fields, I: 8-2

Overhead ground wire, II: 1-41 to 1-43

APPENDIX D (Continued)

INDEX P

Perception current, I: 9-1

Personnel protection, I: 2-1, 2-5, 3-27, 7-1

Personnel safety, I: 1-2

Pilot streamer, I: 3-3

Pipes, utility, grounding of, I: 2-15; II: 1-102

Plates electrodes, I: 2-15, 2-23; II: 1-8

Protection, equipment, I: 1-2

Protective coatings, I: 7-34; II: 1-140, 1-145, 1-146
    bonds, for, I: 7-30; II: 1-145, 1-146
    bond washers, for, II: 1-140

Proximity effect, I: 5-10

APPENDIX D (Continued)

INDEX R

Radio frequency (RF) radiation hazards, I: 9-5

Reactance, I: 5-7

Reaction current, I: 9-2

Recording devices, grounding of, II: 3-40, 3-42

Rectangular conductor, I: 5-13

Reflection loss of electromagnetic shield, I: 8-6; II: 1-161, 1-165 to 1-168
- electric field, for, I: 8-13; II: 1-166
- equations for, I: 8-6
- magnetic field, for, I: 8-11; II: 1-165
- plane wave, for, I: 8-15; II: 1-161, 1-167
- theory of, I: 8-1

Reinforcing steel as shield, properties of, I: 8-56, II: 1-154, 1-156

Re-reflection correction factor, I: 8-19

Resistance requirements, I: 2-5

Resistive coupling, see conductive coupling

Resistivity mapping, soil, II: 1-4

Resistivity, soil, I: 2-5; II: 1-2 to 1-5,
- measurement of, I: 2-8; II: 1-2 to 1-5
- ranges, I: 2-7
- temperature, as a function of, I: 2-8

RF radiation hazards, I: 9-5

Rivets (as bonds), I: 7-15

Roof conductor, lightning, I: 3-26; II: 1-24, 1-33 to 1-37
- location, II: 1-24, 1-33 to 1-37
- routing, II: 1-33 to 1-37
- size, I: 1-24

APPENDIX D (Continued)

INDEX S

Sacrificial anodes, I: 2-63
also see cathodic protection

Safety grounding, I: 1-2, 1-5, 4-1; II: 2-13

Salting methods (for electrode enhancement), I: 2-63; II: 1-185

Saltpeter, I: 2-60
also see chemical enhancement

Screen room, see shielded enclosures

Selection criteria, I: 2-1, 3-1, 7-1, 8-1; II: 1-6 to 1-9
bonds, for, I: 7-1
earth electrode subsystem, for, I: 2-1; II: 1-6 to 1-9
lightning protection, for, I: 3-1
shielding, for, I: 8-1

Semiconductor surge arresters, I: 10-18
also see arresters, surge

Shielded enclosures, I: 8-63 to 8-72
custom built, I: 8-70
double walled, I: 8-71
modular, I: 8-66

Shielding angle, see cone of protection

Shielding effectiveness (SE), I: 8-4, 8-19, 8-31, 8-59; II: 1-155 to 1-160, 1-168
building materials, of, I: 8-59; II: 1-155 to 1-160, 1-168
definition of, I: :8-4
equations for, I: 8-31
layered shields, of, I: 8-31
single thickness shields, of, I: 8-4
tables of, I: 8-6 to 8-54
also see absorption loss, reflection loss, and shields

APPENDIX D (Continued)

INDEX S

Shielding, electromagnetic, I: 8-1
functions of, I: 8-1
theory of, I: 8-2

Shielding requirement, I: 8-14

Shields, I: 8-31; II: 1-154 to 1-165, 2-19, 3-25, 3-27, 3-35, 3-42, 3-53
components, II: 3-25
configuration of, I: 8-63; II: 1-162
design of, I: 8-74; II: 1-159
discontinuous, see apertures
equipment, guidelines for, II: 3-25
grounding of, I: 8-70; II: 1-162, 3-26, 3-35
inspection of, II: 2-19, 3-53
magnetic, I: 8-20, 8-41; II: 1-165, 3-42
material selections for, I: 8-53; II: 1-160, 1-162, 3-42
metal foils as, I: 8-71
personnel protection, I: 8-74; II: 1-159
seams in, I: 8-42; II: 1-162, 3-27, 3-49
testing of, I:8-72
thin film I: 8-31; II: 1-162

Shields, perforated, I: 8-33, 8-52; II: 1-162, 3-30
honeycomb, I: 8-52; II: 1-162, 3-30
screens, I: 8-33, 8-52; II: 3-30

Shock hazards, electric, I: 9-1 to 9-3
effects on human body, I: 9-1
prevention of, I: 9-3

Signal grounding terminals, II: 3-1, 3-44, 3-46

Signal reference, I: 1-3; II: 3-1, 3-35

Silver solder (for bonding), I: 7-14; II: 1-140

Site selection, II: 1-2 to 1-6

INDEX S

Site survey, I: 8-74; II: 1-2 to 1-6, 2-17

Skin effect, I: 5-3, 5-5, 5-8
formulas for, I: 5-5
nomograph of, I: 5-8

Sodium chloride, I: 2-60
also see chemical enhancement

Soft solder (for bonding), I: 7-14; II: 2-10

Soil enhancement, see chemical enhancement

Soil resistivity, I: 2-7; II: 1-2, 1-6

Solvents, use of, I: 7-26

Spark gaps, I: 10-17
also see arresters, surge

Standby generators, II: 1-104

Static electricity, I: 5-19, 9-3, 9-4

Step voltage, I: 2-49

Stepped-leader, I: 3-1

Stray current, I: 2-2, 6-5; II: 2-16, 2-17

Structural steel, I: 5-15; II: 1-39, 1-140, 1-153, 1-154
bonding of, II: 1-140, 1-153, 1-154
ground conductors, as, I: 5-15; II: 1-39

Structures, multiple, II: 1-15, 1-17, 1-18

Stuffing tube, I: 10-24

Surface hardness, see bonding, electrical

Surface preparation, I: 7-25

Surface transfer impedance, I: 8-59

APPENDIX D (Continued)

INDEX T

Terminal protection devices, I: 10-17 to 10-19

Test procedures, I: 8-72; II: l-2 to 1-4, 2-5, 2-16, 2-17, 2-19, 3-43 to 3-46
- bond resistance, II: 2-19,3-47
- earth electrode resistance, II: 2-5
- ground system noise, II: 2-20
- network isolation, II: 2-19, 3-4, 3-41, 3-44, 3-45
- shields, I: 8-72
- soil resistivity, II: 1-2 to 1-4
- stray current, II: 2-17, 2-20

Three-point method, I: 2-46

Thunderstorm day, see iokeraunic

Transducer grounding, II: 1-172, 3-35

Tubular conductor, I: 5-13

TT-C-490, II: 1-145, 1-146

Twisted wires, use of, I: 6-24; II: 1-171, 3-38, 3-40

INDEX U

Underground cables, protection of, II: 1-45, 1-57

Upgrading proceedings for facilities, II: 2-1, 2-33

INDEX V

Varistors, I: 10-18
also see arrester, surge

Ventilation ports, shielding, of, I: 8-53; II: 1-162

Vertical structures, I: 10-9

INDEX W

Water retention, I: 2-60; II: 1-6

Water system as earth electrodes, I: 2-16; II: 1-182

Waveguide-below-cutoff, I: 8-50; II: 1-162, 1-164

Waveguide penetration, facility shield of, I: 10-19 to 10-25

Welding, I: 7-10; II: 1-22, 1-140, 3-18

Well casings, I: 2-16

Wells, grounding, II: 1-20, 1-22

Workmanship, I: 7-34

INDEX X

X-rays, I: 9-5

Custodians:

Army - SC

Navy - EC

Air Force - 90

Other Interest:

DNA - DS

OST (M-35)

Activity, Assignee

Air Force -90

(Project SLHC-4191)

Preparing Activity:

Air Force -90

Review Activities:

Army-SC, CR, AR, AC

Navy - EC, NC, NV, OM

Air Force -02, 04, 11, 14, 15, 17, 50, 90

DMSSO-SD

DCA - DC

NSA - NS

Joint Tactical C^3 Agency -JT

ECAC

INSTRUCTIONS: In a continuing effort to make our standardization documents better, the DoD provides this form for use in submitting comments and suggestions for improvements. All users of military standardization documents are invited to provide suggestions. This form may be detached, folded along the lines indicated, taped along the loose edge *(DO NOT STAPLE)*, and mailed. In block 5, be as specific as possible about particular problem areas such as wording which required interpretation, was too rigid, restrictive, loose, ambiguous, or was incompatible, and give proposed wording changes which would alleviate the problems. Enter in block 6 any remarks not related to a specific paragraph of the document. If block 7 is filled out, an acknowledgement will be mailed to you within 30 days to let you know that your comments were received and are being considered.

NOTE: This form may not be used to request copies of documents, nor to request waivers, deviations, or clarification of specification requirements on current contracts. Comments submitted on this form do not constitute or imply authorization to waive any portion of the referenced document(s) or to amend contractual requirements.

☆ U.S. Government Printing Office: 1982—360-879/5804

(Fold along this line)

(Fold along this line)

NO POSTAGE NECESSARY IF MAILED IN THE UNITED STATES

OFFICIAL BUSINESS
PENALTY FOR PRIVATE USE $300

BUSINESS REPLY MAIL
FIRST CLASS PERMIT NO. 73236 WASH DC

POSTAGE WILL BE PAID BY HQ U.S. AIR FORCE

Commander 1842 EEC
Attn: EEITE
Scott AFB IL 62225-6348

STANDARDIZATION DOCUMENT IMPROVEMENT PROPOSAL

(See Instructions – Reverse Side)

1. DOCUMENT NUMBER	2. DOCUMENT TITLE
MIL-HDBK-419A	Grounding, Bonding, and Shielding for Electronic Equipments and Facilities

3a. NAME OF SUBMITTING ORGANIZATION	4. TYPE OF ORGANIZATION (Mark one)
	☐ VENDOR
b. ADDRESS (Street, City, State, ZIP Code)	☐ USER
	☐ MANUFACTURER
	☐ OTHER (Specify) _____

5. PROBLEM AREAS

a. Paragraph Number and Wording

b. Recommended Wording:

c. Reason/Rationale for Recommendation

6. REMARKS

7a. NAME OF SUBMITTER (Last, First, MI – Optional)	b. WORK TELEPHONE NUMBER (Include Area Code – Optional)
c. MAILING ADDRESS (Street, City, State, ZIP Code) – Optional	8. DATE OF SUBMISSION (YYMMDD)

DD FORM 82 MAR 1426 PREVIOUS EDITION IS OBSOLETE

MIL-HDBK-419A
29 DECEMBER 1987

SUPERSEDING
MIL-HDBK-419
21 JANUARY 1982

MILITARY HANDBOOK

GROUNDING, BONDING, AND SHIELDING FOR ELECTRONIC EQUIPMENTS AND FACILITIES

VOLUME II OF 2 VOLUMES
APPLICATIONS

AMSC N/A **EMCS/SLHC/TCTS**

DISTRIBUTION STATEMENT A. Approved for public release; distribution is unlimited

DEPARTMENT OF DEFENSE
WASHINGTON DC 20301

MIL-HDBK-419A

GROUNDING, BONDING, AND SHIELDING FOR ELECTRONIC EQUIPMENTS AND FACILITIES

1. This standardization handbook was developed by the Department of Defense in accordance with established procedure.

2. This publication was approved on 29 December 1987 for printing and inclusion in the military standardization handbook series. Vertical lines and asterisks are not used in this revision to identify changes with respect to the previous issue due to the extensiveness of the changes.

3. This document provides basic and application information on grounding, bonding, and shielding practices recommended for electronic equipment. It will provide valuable information and guidance to personnel concerned with the preparation of specifications and the procurement of electrical and electronic equipment for the Defense Communications System. The handbook is not intended to be referenced in purchase specifications except for informational purposes, nor shall it supersede any specification requirements.

4. Every effort has been made to reflect the latest information on the interrelation of considerations of electrochemistry, metallurgy, electromagnetic, and atmospheric physics. It is the intent to review this handbook periodically to insure its completeness and currency. Users of this document are encouraged to report any errors discovered and any recommendations for changes or inclusions to: Commander, 1842 EEG/EEITE, Scott AFB IL 62225-6348.

5. Copies of Federal and Military Standards, Specifications and associated documents (including this handbook) listed in the Department of Defense Index of Specifications and Standards (DODISS) should be obtained from the DOD Single Stock Point: Commanding Officer, Naval Publications and Forms Center, 5801 Tabor Avenue, Philadelphia PA 19120. Single copies may be obtained on an emergency basis by calling (AUTOVON) 442-3321 or Area Code (215)-697-3321. Copies of industry association documents should be obtained from the sponsor. Copies of all other listed documents should be obtained from the contracting activity or as directed by the contracting officer.

PREFACE

This volume is one of a two-volume series which sets forth the grounding, bonding, and shielding applications for communications electronics (C-E) equipments and facilities. Grounding, bonding, and shielding are complex subjects about which in the past there has existed a good deal of misunderstanding. The subjects themselves are interrelated and involve considerations of a wide range of topics from electrochemistry and metallurgy to electromagnetic field theory and atmospheric physics. These two volumes reduce these varied considerations into a usable set of principles and practices which can be used by all concerned with, and responsible for, the safety and effective operation of complex C-E systems. Where possible, the principles are reduced to specific steps. Because of the large number of interrelated factors, specific steps cannot be set forth for every possible situation. However, once the requirements and constraints of a given situation are defined, the appropriate steps for solution of the problem can be formulated utilizing the principles set forth.

Both volumes (Volume I, Basic Theory and Volume II, Applications) implement the Grounding, Bonding, and Shielding requirements of MIL-STD-188-124A which is mandatory for use within the Department of Defense. The purpose of this standard is to ensure the optimum performance of ground-based telecommunications equipment by reducing noise and providing adequate protection against power system faults and lightning strikes.

This handbook emphasizes the necessity for including considerations of grounding, bonding, and shielding in all phases of design, construction, operation, and maintenance of electronic equipment and facilities. Volume I, Basic Theory, develops the principles of personnel protection, fault protection, lightning protection, interference reduction, and EMP protection for C-E facilities. In addition, the basic theories of earth connections, signal grounding, electromagnetic shielding, and electrical bonding are presented. The subjects are not covered independently, rather they are considered from the standpoint of how they influence the design of the earth electrode subsystem of a facility, the selection of ground reference networks for equipments and structures, shielding requirements, facility and equipment bonding practices, etc. Volume I also provides the basic background of theory and principles that explain the technical basis for the recoin m ended practices and procedures, illustrates the necessity for care and thoroughness in implementation of grounding, bonding, and shielding; and provides supplemental information to assist in the solution of those problems and situations not specifically addressed.

In Volume II, Applications, the principles and theories, including RED/BLACK protection, are reduced to the practical steps and procedures which are to be followed in structural and facility development, electronic engineering, and in equipment development. These applications should assure personnel, equipment and structural safety, minimize electromagnetic interference (EMI) problems in the final operating system; and minimize susceptibility to and generation of undesirable emanations. The emphasis in Volume II goes beyond development to assembly and construction, to installation and checkout, and to maintenance for long term use.

Four appendices are provided as common elements in both volumes. Appendix A is a glossary of selected words and terms as they are used herein. If not defined in the glossary, usage is in accordance with Federal Standard 1037, Glossary of Telecommunication Terms. Appendix B is a supplemental bibliography containing selected references intended to supply the user with additional material. Appendix C contains the table of contents for the other volume. Appendix D contains the index for the two-volume set.

TABLE OF CONTENTS

CHAPTER 1- NEW FACILITIES DESIGN CRITERIA

Paragraph		Page
1.1	INTRODUCTION.	1-1
1.2	EARTH ELECTRODE SUBSYSTEM	1-2
1.2.1	Determination of Site Parameters.	1-2
1.2.1.1	Soil Resistivity	1-2
1.2.1.2	Geological Effects	1-5
1.2.1.3	Physical Features	1-5
1.2.1.4	Local Climate	1-5
1.2.2	Design Procedure	1-6
1.2.2.1	Selection of Electrode Configuration	1-6
1.2.2.2	Calculation of Earth Resistance.	1-9
1.2.2.3	Alternate Configurations	1-9
1.2.3	Design Guidelines	1-14
1.2.4	Installation Practices	1-22
1.3	LIGHTNING PROTECTION FOR STRUCTURES	1-23
1.3.1	Principles of Protection	1-23
1.3.2	Integral Protection System	1-23
1.3.2.1	Air Terminals	1-24
1.3.2.1.1	Size and Materials	1-24
1.3.2.1.2	Location	1-24
1.3.2.2	Grounding Conductors	1-33
1.3.2.2.1	Roof Conductors	1-33
1.3.2.2.2	Down Conductors	1-37
1.3.2.3	Fasteners	1-39
1.3.3	Separately Mounted Protection Systems	1-40
1.3.3.1	Mast Type	1-40
1.3.3.2	Overhead Ground Wire Type	1-41
1.3.3.3	Waveguide Installation and Grounding	1-42
1.3.3.4	Cable Installation and Grounding	1-49
1.3.3.5	Lightning-Generated Transient Surge Protection	1-49
1.3.3.5.1	Transient Source and Equipment Damage.	1-49
1.3.3.5.2	Minimizing Damage	1-50
1.3.3.5.3	Susceptible Components	1-50
1.3.3.5.4	Frequency of Transient Occurrence	1-51
1.3.3.5.5	Transient Definition, AC Service Conductors	1-51
1.3.3.5.6	Methods for Transient Protection on AC Service Conductors	1-56
1.3.3.5.7	Use of Ferrous Metal Conduit	1-56
1.3.3.5.8	Use of Overhead Guard Wires	1-56

TABLE OF CONTENTS (Continued)

CHAPTER 1- NEW FACILITIES DESIGN CRITERIA

Paragraph		Page
1.3.3.5.9	Protection of Underground Cables.	1-57
1.3.3.5.10	Buried Guard Wire	1-57
1.3.3.5.11	Secondary AC Surge Arrester	1-59
1.3.3.5.12	Surge Arrester Installation	1-59
1.3.3.5.13	Operating Characteristics of Surge Arresters	1-60
1.3.3.5.14	Desirable Operating Characteristics for Transient Suppressors	1-67
1.3.3.5.15	Characteristics of Different Types of Surge Arresters	1-67
1.3.3.5.16	Transient Protection for Externally Exposed Equipment Lines	1-73
1.3.3.5.17	Frequency of Transient Occurrence	1-73
1.3.3.5.18	Amplitudes and Waveforms of Occurring Transients	1-73
1.3.3.5.19	Equipment Withstand Levels	1-74
1.3.3.5.20	Protection Methods Against Transients	1-74
1.3.3.5.21	Enclosing Cable Runs in Ferrous Metal Conduit	1-74
1.3.3.5.22	Transient Suppression	1-75
1.3.3.5.23	Types of Available Transient Suppression.	1-77
1.3.3.5.24	Operating Characteristics of Transient Suppressors	1-77
1.3.3.5.25	Transient Suppressor Packaging Design	1-78
1.3.3.5.26	Coaxial Cable Shield Connection Through an Entrance Plate	1-78
1.3.3.5.27	Grounding of Unused Wires	1-78
1.3.3.5.28	Transient Suppression for RF Coaxial Lines	1-79
1.3.3.5.29	Equipment-Level Transient Suppression	1-79
1.3.3.6	Lightning Generated Transient Protection Evaluation	1-79
1.3.3.7	Transient Protection	1-80
1.3.3.7.1	Protection Requirement	1-80
1.3.3.7.2	Transient Definition	1-81
1.3.3.7.3	Determination of Equipment Damage (Withstand) Levels	1-82
1.3.3.7.4	Determination of Need for Transient Protection	1-83
1.3.3.7.5	Minimizing Transient Damage	1-83
1.3.3.7.6	AC Power Input	1-84
1.3.3.7.7	Power Supply Transient Suppression	1-89
1.3.3.7.8	Landline Transient Suppression	1-89
1.3.3.8	Corrosion Control	1-98
1.3.3.9	Joints	1-99
1.3.3.10	Physical Protection	1-99
1.4	FAULT PROTECTIVE SUBSYSTEM	1-99
1.4.1	Purpose	1-99
1.4.2	Equipment Fault Protection Subsystem Composition	1-100

TABLE OF CONTENTS (Continued)

CHAPTER 1- NEW FACILITIES DESIGN CRITERIA

Paragraph		Page
1.4.3	Configuration of the Equipment Fault Protection Subsystem	1-100
1.4.4	Pipes and Tubes	1-102
1.4.5	Electrical Supporting Structures	1-102
1.4.5.1	Metal Conduit	1-103
1.4.5.2	Cable Trays	1-103
1.4.5.3	Enclosures	1-103
1.4.5.4	Cable Armor	1-103
1.4.5.5	Rotating Machinery	1-103
1.4.6	Power Distribution Systems..	1-104
1.4.7	Standby AC Generators	1-104
1.4.8	Equipment Fault Protection Subsystems for Transportable Equipment	1-104
1.4.9	MIL-STD-188-124A and NEC Compliance Evaluation	1-105
1.4.9.1	Measurements	1-105
1.4.9.2	MIL-STD-188-124A and NEC Compliance Inspection	1-105
1.4.9.3	Correction of Deficiencies	1-111
1.5	SIGNAL REFERENCE SUBSYSTEM FOR NEW FACILITIES	1-113
1.5.1	Higher Frequency Network	1-113
1.5.1.1	Multipoint Ground System	1-118
1.5.1.1.1	Types of Equipotential Planes	1-120
1.5.1 .1.1.1	Copper Grid Embedded in Concrete	1-120
1.5.1.1.1.2	Equipotential Plane Under Floor Tile or Carpet	1-120
1.5.1.1.1.3	Overhead Equipotential Plane.	1-120
1.5.1.1.1.4	Raised (Computer) Flooring	1-120
1.5.1.1.1.4.1	Bolted-Grid (Stringer) or Rigid Grid System.	1-125
1.5.1.1.1.4.2	Drop-In or Removable Grid System	1-131
1.5.1.1.1.4.3	Free-Standing, Pedestal-Only or Stringerless System	1-131
1.5.1.1.1.5	Ground Risers	1-131
1.5.1.1.1.6	Equipment Cabinet Grounding	1-131
1.5.2	Lower Frequency Signal Reference Network	1-131
1.6	GROUNDING PHILOSOPHY FOR EQUIPMENTS PROCESSING NATIONAL SECURITY RELATED INFORMATION (RED/BLACK EQUIPMENTS)	1-134
1.7	BONDING PRACTICES	1-140
1.7.1	Application Guidelines	1-140
1.7.2	Surface Preparation	1-142
1.7.3	Bond Protection Code	1-143
1.7.3.1	Jumper Fasteners	1-147
1.7.4	Typical Bonds	1-148

TABLE OF CONTENTS (Continued)

CHAPTER 1- NEW FACILITIES DESIGN CRITERIA

Paragraph		Page
1.7.4.1	Cable Trays	1-148
1.7.4.2	Tubing and Conduit	1-149
1.7.4.3	Other Examples	1-149
1.8	SHIELDING	1-154
1.8.1	Establishing Requirements	1-154
1.8.2	Design Guidelines	1-159
1.83	Selection of Materials	1-160
1.8.4	Construction Guidelines	1-162
1.9	COMMON-MODE NOISE AND INSTRUMENTATION	1-164
1.9.1	Design Practices	1-171
1.9.2	Instrumentation Considerations.	1-172
1.10	EMP PROTECTION	1-172
1.10.1	Earth Connection	1-172
1.10.2	EMP Shield Applications	1-173
1.10.3	EMP Bonding Practices	1-173
1.10.4	Construction Guidelines	1-176
1.11	MILITARY MOBILE FACILITIES	1-177
l.11.1	General Tactical Grounding Requirements	1-177
1.11.l.l	Facility Ground System	1-177
1.11.1.1.1	Earth Ground	1-177
1.11.1.1.1.1	General Earth Electrode Subsystem Requirements	1-177
1.11.1.1.1.2	Earth Electrode Subsystem Types	1-177
1.11.1.1.1.3	Soil Resistance	1-178
1.11.1.1.1.4	Ground Rod Resistance	1-178
1.11.1.1.1.5	Ground Resistance She's	1-178
1.11.l.l.2	Power Ground	1-178
1.11.1.1.2.1	Three-Phase Power Distribution System	1-178
1.11.1.1.2.2	Single-Phase Power Distribution System	1-179
1.11.1.1.2.3	DC Power System (2-Wire)	1-179
1.11.1.1.3	Lightning/EMP Protection Subsystem	1-179
1.11.1.1.3.1	Air Terminals	1-179
1.11.1.1.3.2	Terminal Protection Devices	1-182
1.11.1.1.4	Signal Reference Subsystem.	1-182
1.11.1.1.5	Fault Protection Subsystem..	1-182
1.11.1.2	Measuring Ground Resistance in Tactical Environments	1-182
1.11.1.3	Reducing Ground Resistance in Tactical Environments	1-182
1.11.1.3.1	Existing Facilities	1-182

TABLE OF CONTENTS (Continued)

CHAPTER 1- NEW FACILITIES DESIGN CRITERIA

Paragraph		Page
1.11.1.3.2	Multiple Electrode System	1-185
1.11.1.3.3	Earth Electrode Subsystem	1-185
1.11.1.3.4	Chemical Treatment	1-185
1.11.2	Detailed Tactical Grounding Requirements	1-185
1.11.2.1	Introduction	1-185
1.11.2.1.1	Training	1-186
1.11.2.1.2	Testing	1-186
1.11.2.2	Stand-Alone Equipment	1-186
1.11.2.2.1	General Description	1-186
1.11.2.2.2	Grounding Procedure	1-186
1.11.2.2.2.1	Low Resistance Grounds	1-186
1.11.2.2.2.1.1	Existing Facilities	1-186
1.11.2.2.2.1.2	Earth Electrode Subsystem, Single Ground Rod	1-187
1.11.2.2.2.1.3	Earth Electrode Subsystem, Multiple Ground Rods	1-187
1.11.2.3	Stand-Alone Shelter	1-187
1.11.2.3.1	General Description	1-187
1.11.2.3.2	Interconnection of Subsystems	1-187
1.11.2.4	Collocated Military Mobile Equipments	1-187
1.11.2.4.1	General Description	1-187
1.11.2.4.2	Grounding Procedure	1-188
1.11.2.5	Collocated Shelters	1-188
1.11.2.5.1	General Description	1-188
1.11.2.5.2	Grounding Procedure	1-188
1.11.2.5.2.1	Power Ground	1-188
1.11.2.5.2.2	Signal Ground	1-188
1.11.2.5.2.3	Fault Protection Subsystem	1-188
1.11.2.5.2.4	Lightning/EMP Protection	1-189
1.11.2.5.2.5	Collocated Shelters Greater than 8 Meters Apart	1-189
1.11.2.5.2.5.1	Ground Resistance Difference of Less than 150 Ohms	1-189
1.11.2.5.2.5.2	Ground Resistance Difference of Greater than 150 Ohms	1-189
1.11.2.5.2.5.3	Earth Electrode Subsystem	1-190
1.11.2.5.2.5.3.1	Power Ground	1-190
1.11.2.5.2.5.3.2	Signal Ground	1-190
1.11.2.5.2.5.3.3	Safety/Equipment Ground (Green Wire)	1-190
1.11.2.5.2.5.3.4	Lightning/EMP Protection	1-190
1.11.2.6	Fixed Prefabricated Shelters..	1-190
1.11.2.6.1	General Description	1-190

TABLE OF CONTENTS (Continued)

CHAPTER 1- NEW FACILITIES DESIGN CRITERIA

Paragraph		Page
1.11.2.6.2	Electrical Connection	1-190
1.12	FENCES	1-191
1.12.1	Introduction	1-191
1.12.2	Grounding	1-191
1.12.3	Installation	1-191
1.13	INSPECTION AND TEST PROCEDURES FOR A NEW FACILITY	1-193
1.13.1	Earth Electrode Subsystem	1-193
1.13.2	Lightning Protection Network	1-194
1.13.3	Signal Reference and Fault Protection Subsystems	1-194
1.13.4	Bonds and Bonding	1-195
1.13.5	Facility Checkout Form	1-196
	Part I Earth Electrode Subsystem	1-196
	Part II Lightning Protection Network	1-197
	Part III Facility Ground System	1-198
	Part IV Bonding	1-199
1.14	REFERENCES	1-200

CHAPTER 2 - EXISTING FACILITIES

2.1	INTRODUCTION	2-1
2.2	UPGRADING	2-1
2.2.1	Drawings	2-4
2.2.2	Facility Survey	2-4
2.2.2.1	Survey Steps	2-4
2.2.2.2	Inspection Procedure	2-5
2.2.2.2.1	Earth Electrode Subsystem	2-5
2.2.2.2.2	Bonds and Bonding	2-10
2.2.2.2.3	Lightning Protection Network	2-13
2.2.2.2.4	Safety Grounding	2-16
2.2.2.2.5	Signal Grounding Practices	2-17
2.2.2.2.6	Ground System Noise Survey	2-17
2.2.2.2.7	Shielding	2-19
2.2.2.3	Test Procedures	2-19
2.2.2.3.1	Bond Resistance	2-19
2.2.2.3.2	Ground System Noise Current	2-20
2.2.2.3.3	Differential Noise Voltage	2-22
2.2.2.4	Survey Form	2-24

TABLE OF CONTENTS (Continued)

CHAPTER 2- EXISTING FACILITIES

Paragraph		Page
2.2.3	Guidelines for Upgrading	2-33
2.2.4	Expansion of Existing Facilities	2-35
2.2.5	Expansion of Existing Facilities for Higher-Frequency Grounds	2-35
2.3	MAINTENANCE	2-36
2.3.1	Schedules and Records	2-36
2.3.2	Maintenance Procedures	2-36
2.3.2.1	Earth Electrode Subsystem	2-39
2.3.2.2	Lightning Protection Subsystem.	2-41
2.3.2.3	Bonding	2-42
2.3.2.4	Fault Protection Subsystem (Safety Ground)	2-43
2.3.2.5	Signal Reference Subsystem (Signal Grounding)	2-44
2.3.2.6	Shielding	2-45
2.3.3	Facility Maintenance Report	2-46
2.3.4	Performance Evaluation Program	2-54
2.4	GROUNDING CONSIDERATIONS FOR CLASSIFIED INFORMATION PROCESSORS (RED/BLACK EQUIPMENTS) INSTALLED PRIOR TO THIS HANDBOOK	2-59
2.4.1	Introduction	2-59
2.4.2	Existing Facilities	2-59
2.4.3	Protection Grounds	2-59
2.4.4	Signal Reference Subsystem	2-60
2.4.5	Signal Filter Ground	2-61
2.4.6	Grounding Precautions	2-61

CHAPTER 3 - EQUIPMENT DESIGN CRITERIA

3.1	INTRODUCTION	3-1
3.2	GROUNDING PROCEDURES	3-1
3.2.1	Signal Grounds	3-1
3.2.1.1	Lower Frequency Equipment	3-2
3.2.1.1.1	Signal Ground Network Configuration	3-2
3.2.1.1.2	Signal Ground Terminals	3-2
3.2.1.1.3	Color Code	3-3
3.2.1.1.4	Cabinet Bus Bar	3-3
3.2.1.1.5	Isolation	3-4
3.2.1.1.6	Signal Interfacing	3-4
3.2.1.1.7	Signal Grounding	3-6
3.2.1.2	Higher Frequency Equipment	3-12

TABLE OF CONTENTS (Continued)

CHAPTER 3 - EQUIPMENT DESIGN CRITERIA

Paragraph		Page
3.2.1.2.1	Signal Interfaces	3-13
3.2.1.2.2	Cable Connectors	3-13
3.2.1.3	Equipments Containing Both Lower and Higher Frequency Circuits	3-14
3.2.2	Fault Protection	3-14
3.2.3	Cabinet Grounding	3-16
3.3	BONDING PRACTICES	3-18
3.4	SHIELDING GUIDELINES	3-25
3.4.1	Parts Selection	3-25
3.4.2	Layout and Construction	3-25
3.4.3	Equipment Enclosures	3-27
3.4.3.1	Seams	3-27
3.4.3.2	Penetrations and Apertures	3-28
3.5	COMMON-MODE NOISE CONTROL AND INSTRUMENTATION GROUNDING	3-34
3.5.1	Common-Mode Noise Control	3-34
3.5.2	Instrumentation Grounding	3-34
3.5.2.1	Analog Systems	3-35
3.5.2.1.1	Grounded Transducers	3-35
3.5.2.1.2	Ungrounded Transducers	3-38
3.5.2.1.3	Amplifiers	3-38
3.5.2.2	Digital Data Systems	3-40
3.5.2.3	Recording Devices	3-40
3.5.2.3.1	Magnetic Tape Recorders	3-40
3.5.2.3.2	Strip Chart Recorders	3-42
3.5.2.3.3	X-Y Plotters	3-42
3.6	EMP CONSIDERATIONS	3-42
3.7	EQUIPMENT INSPECTION AND TEST PROCEDURES	3-43
3.7.1	Lower Frequency Equipments	3-43
3.7.2	Higher Frequency Equipments	3-47
3.7.3	Hybrid Equipments	3-47
3.7.4	Installed Equipments	3-47
3.7.5	Fault Protection Subsystem	3-47
3.7.6	Bonding	3-49
3.7.7	Shielding	3-49
3.7.8	Instrumentation System	3-50
3.7.9	EMP Design	3-50
3.7.10	Other Observations	3-50
3.7.11	Inspection Form	3-50
3.8	REFERENCES	3-54

TABLE OF CONTENTS (Continued)

CHAPTER 4 - NOTES

Paragraph		Page
4.1	SUBJECT TERM (KEY WORD) LISTING	4-1

APPENDICES

A	GLOSSARY	A-1
B	SUPPLEMENTAL BIBLIOGRAPHY	B-1
BI	SUBJECT CROSS REFERENCE	B-1
BII	LISTINGS	B-2
C	TABLE OF CONTENTS FOR VOLUME I	C-1
D	INDEX	D-1

LIST OF FIGURES

Figure		Page
1-1	Measurement of Soil Resistivity.	1-3
1-2	Resistivity Determination of a Small Site	1-4
1-3	Minimum Earth Electrode Subsystem Configuration for Rectangular Shaped Facility	1-10
1-4	Nomograph for Determining the Resistance to Earth of a Single Ground Rod	1-11
1-5	Effective Resistance of Ground Rods When Arranged in a Straight Line or a Large Circle	1-12
1-6	Graph of Multiple-Rod Resistance Ratio	1-13
1-7	Electrode Configuration for Irregular Shaped Facility	1-16
1-8	Electrode Configuration for Adjacent Structures	1-17
1-9	Electrode Configuration for Closely Spaced Structures	1-17
1-10	Grounding System for Typical Radar Installation	1-18
1-11	Details of Ground Rod/Earth Electrode Subsystem Installation	1-19
1-12	Concrete Grounding Well	1-20
1-13	Typical Grounding Well Installation	1-20
1-14	Connections to Earth Electrode Subsystem	1-21
1-15	Grounding Practices for Lightning Protection	1-25
1-16	Location of Air Terminals for Common Roof Types	1-26
1-17	Location of Air Terminals on Gently Sloping Roofs	1-27
1-18	Air Terminal Placement on Flat-Roofed Structures	1-29
1-19	Graphical Method for Determining Need for Additional Air Terminals	1-30
1-20	Field Expedient Technique for Determining the Protection of Prominent Dormers	1-31
1-21	Illustration of Method for Determining the Protection of Flat Surfaces as Provided by Air Terminals	1-32
1-22	Criteria for Dead End Coverage	1-37
1-23	Recommended Construction Practices for Integral Lightning Protection Systems	1-38
1-24	The Protected Zone Provided by Two Vertical Masts	1-40
1-25	Overhead Ground Wire Lightning Protection System	1-41
1-26	Waveguide Entry Plate Detail	1-43
1-27	Grounding Detail for Elliptical Waveguide (Front View)	1-44
1-28A	Grounding Detail for Elliptical Waveguide (Side View)	1-45
1-28B	Heat Shrink Grounding	1-46
1-29	Ground Strap Detail for Elliptical Waveguide	1-46
1-30	Strap Cutting Detail for Elliptical Waveguide	1-46
1-31	Typical Communication Cable Entry Installation	1-47
1-32	Ground Strap Detail	1-48
1-33	Grounding Steps for Cables	1-48
1-34	Mean Number of Thunderstorm Days per Year for the United States	1-53
1-35	Lightning Protection for Underground Service.	1-58
1-36	Secondary AC Surge Arrester Installation, Grounded Service	1-61
1-37	Secondary AC Surge Arrester Installation, Ungrounded Service	1-62

LIST OF FIGURES (Continued)

Figure		Page
1-38	Typical Operating Curve for Two Series of Gas-filled Spark Gap Arresters With Nonlinear Series Resistor.	1-69
1-39	Typical Arrester Operating Curves, ZNR and SAS	1-72
1-40	Typical Transient Suppressor Installation, Facility and Equipment Level	1-76
1-41	Typical Configuration for Protection of Equipment from Conducted Powerline Surges and Transients (Neutral Grounded).	1-86
1-42	Typical Configuration for Protection of Equipment from Conducted Powerline Surges and Transients (Ungrounded).	1-87
1-43	Typical Configuration for Protection of Equipment from Conducted Landline Transients	1-92
1-44	Transient Suppression for Coaxial Lines (DC to 3 MHz).	1-95
1-45	Transient Suppression for Twinaxial Lines (DC to 3 MHz)	1-96
1-46	Typical Equipment Fault Protection Subsystem	1-101
1-47	Method for Determining the Existence of Improper Neutral Ground Connections	1-112
1-48	(Deleted)	
1-49	Typical Equipotential Ground Plane for Multi-Deck Building	1-115
1-50	Typical Building Floor Plan (Top View)	1-116
1-51	Typical Multi-Deck Building Plan (Side View)	1-117
1-52	Elements of the Facility Ground System (With Grid)	1-121
1-53	Typical Equipotential Ground Plane for New Construction Higher or Hybrid Frequencies Facilities Installation	1-122
1-54	Ground Connector for Equipotential Plane in Concrete	1-123
1-55	Typical Ground Connectors	1-123
1-56	Example of Cable to Bar Ground Connectors	1-124
1-57	(Deleted)	
1-58	Rigid Grid Floor System Details.	1-127
1-59	Example of Rigid Grid to Pedestal Bolted Connection	1-128
1-60	Example of Rigid-Grid to Pedestal Clamped Connection	1-129
1-61	Example of Unacceptable Grid to Pedestal Bonding	1-130
1-62	Example of Drop-In Grid Floor Construction	1-131
1-63	Example of Pedestal Only Floor Construction	1-132
1-64	Typical Equipment Cabinet Grounding Detail	1-133
1-65	Typical RED/BLACK Signal Reference Subsystem	1-135
1-66	Typical RED Signal, Shield Ground, Bus Distribution System	1-136
1-67	Typical Intermediate Distribution Frame (Shield Ground Bus in Distribution Frames)	1-137
1-68	Typical Intermediate Distribution Frame (Data Concentrator Frame Installation)	1-138
1-69	Facility Power and AC Ground Distribution	1-139
1-70	Order of Assembly for Bolted Connection	1-142
1-71	Bonding of Cable Trays	1-148

LIST OF FIGURES (Continued)

Figure		Page
5-12	Single-Point Signal Ground (for Lower Frequencies)	5-20
5-13	Single-Point Ground Bus System Using Separate Risers (Lower Frequency)	5-21
5-14	Single-Point Ground Bus System Using a Common Bus	5-22
5-15	Use of Single-Point Ground Configuration to Minimize Effect of Facility Ground Currents	5-23
5-16	Multipoint Ground Configuration	5-24
5-17	Use of Structural Steel in Multiple-Point Grounding	5-25
5-18	Recommended Signal Coupling Practice for Lower Frequency Equipment	5-29
5-19	Ground Network Used as Signal Return (Practice Not Generally Recommended)	5-30
6-1	Idealized Energy Transfer Loop	6-2
6-2	Energy Transfer Loop With Noise Sources in Ground System.	6-3
6-3	Equivalent Circuit of Non-Ideal Energy Transfer Loop	6-3
6-4	Practical Combinations of Source-Load Pairs	6-4
6-5	Coupling Between Circuits Caused by Common Return Path Impedance.	6-7
6-6	Conductive Coupling of Extraneous Noise into Equipment Interconnecting Cables	6-7
6-7	Magnetic Field Surrounding a Current-Carrying Conductor	6-8
6-8	Illustration of Inductive Coupling	6-9
6-9	Illustration of Capacitive Coupling	6-11
6-10	Equivalent Circuit of Network in Figure 6-9	6-13
6-11	Characteristic Voltage Transfer Curve for Capacitive Coupling	6-15
6-12	Electric Field Patterns in the Vicinity of a Radiating Dipole	6-16
6-13	Illustration of Conductively-Coupled Corn men-Mode Noise	6-18
6-14	Common-Mode Noise in Unbalanced Systems	6-20
6-15	Common-Mode Noise in Balanced Systems	6-22
7-1	Effects of Poor Bonding on the Performance of a Power Line Filter	7-2
7-2	Current Flow Through Direct Bonds	7-5
7-3	Nature of Contact Between Bond Members.	7-6
7-4	Resistance of a Test Bond as a Function of Fastener Torque	7-9
7-5	Typical Exothermic Connections	7-12
7-6	Typical Bond Configuration Which Can be Implemented With the Exothermic Process.	7-13
7-7	Nomograph for Torque on Bolts	7-15
7-8	Bonding Path Established by Rivets	7-17
7-9	An Improperly Riveted Seam	7-17
7-10	Inductive Reactance of Wire and Strap Bond Jumpers	7-22
7-11	Relative Inductive Reactance Versus Length-to-Width Ratio of Flat Straps	7-23
7-12	Frequency Variation of the Impedance of Simple Conductors	7-24
7-13	Equivalent Circuit for Bonding Strap	7-24

LIST OF FIGURES (Continued)

Figure		Page
2-6	Typical Bonding Deficiencies	2-11
2-7	Typical Bonding Deficiencies	2-12
2-8	Severely Damaged Down Conductor	2-14
2-9	Method for Determining the Existence of Improper Neutral Ground Connections	2-15
2-10	Measurement of Stray Current Level in Safety Ground Conductor	2-16
2-11	Typical Bond Resistance and Stray Current Measurement Locations in an Electronic Facility	2-18
2-12	Bond Resistance Measurement Technique	2-21
2-13	Test Setup for Stray Current Measurements	2-22
2-14	Oscilloscope Connections for Measuring Voltage Levels on Ground Systems	2-23
2-15	Example of Equipotential or Multipoint Grounding	2-37
2-16	Major Discrepancy Report Form	2-38
2-17	Typical Multiple Area Ground Distribution	2-62
2-18	Typical Signal, Shield Ground, Bus Distribution System for Single-Point Ground	2-63
2-19	Crypto Equipment Grounds	2-64
2-20	Typical Facility Ground System	2-65
3-1	Grounding in Lower Frequency Equipment	3-3
3-2	Lower Frequency Signal Ground Bus Bar Installation in Rack or Cabinet	3-5
3-3	Use of Balanced Lines to Avoid Ground Loops	3-7
3-4	Effect of an Unbalanced Cable on the Single-Point Ground	3-8
3-5	Effect of Arbitrarily Grounding the Source End of Unbalanced Equipment Interconnecting Cables	3-9
3-6	Method of Grounding the Individual Shields on Long Lower Frequency Shield Cables	3-10
3-7	Grounding of Overall Cable Shields to Connectors	3-11
3-8	Grounding of Overall Cable Shields to Penetrated Walls	3-12
3-9	Establishment of Shield Continuity Between Higher Frequency Equipments	3-13
3-10	Grounding Practices in Equipments Containing Both Higher Frequency and Lower Frequency Circuits	3-15
3-11	Typical Equipment Cabinet Grounding Detail	3-17
3-12	Acceptable and Unacceptable Uses of Bonding Jumpers	3-19
3-13	Bonding of Subassemblies to Equipment Chassis	3-21
3-14	Bonding of Equipment to Mounting Surface	3-21
3-15	Typical Method of Bonding Equipment Flanges to Frame or Rack	3-22
3-16	Bonding of Rack-Mounted Equipments Employing Dagger Pins.	3-22
3-17	Recommended Practices for Effective Bonding in Cabinets	3-23
3-18	Method of Bonding Across Hinges	3-24
3-19	Bonding of Connector to Mounting Surface	3-24
3-20	Method of Making Permanent Seam Using a Gasket	3-29

LIST OF FIGURES (Continued)

Figure		Page
3-21	Mounting of Gasket on Hinged Side of Equipment Doors and Panels	3-29
3-22	Illustration of Proper and Improper Shield Penetration	3-31
3-23	Use of Cylindrical Waveguide - Below-Cutoff for Control Shaft Shield Penetration	3-32
3-24	Method of Mounting Wire Screen Over a Large Aperture	3-33
3-25	Acceptable Methods of Shielding Panel - Mounted Meters	3-33
3-26	Grounding Practices for Single-Ended Amplifiers	3-36
3-27	Grounding Practices for Differential Amplifiers	3-36
3-28	Method of Grounding Bridge Transducers	3-37
3-29	Use of Isolated Differential Amplifier With Balanced Bridge Transducer	3-37
3-30	Recommended Grounding Practices for Floating Traducers	3-39
3-31	Grounding for Single Channel Strip Chart Recorder	3-41
3-32	Resistive Isolation of Data Channels	3-41
3-33	Single Ground Terminal Isolation Resistance Test for an Individual Equipment	3-45
3-34	Signal Ground Terminal Isolation Resistance Test for an Equipment Assembly	3-46
3-35	Measurement of Connector Bonding Resistance	3-48

LIST OF TABLES

Table		Page
1-1	Relative Advantages and Disadvantages of the Principal Types of Earth Electrodes	1-8
1-2	Minimum Requirements for Roof and Down Conductors on Structures Not Greater than 75 Feet (23 Meters) in Height	1-34
1-3	Minimum Requirements for Roof and Down Conductors on Structures Greater than 75 Feet (23 Meters) in Height	1-34
1-4	Solid Copper Wire - Weight, Breaking Strength, DC Resistance	1-35
1-5	Frequency of Transient Occurrences	1-51
1-6	Parameter for Direct Lightning Strike Current	1-54
1-7	Peak Currents from Direct Lightning Strikes	1-55
1-8	Transient Surge Amplitudes	1-55
1-9	Transient Occurrence, High-Incident Lightning Areas	1-63
1-10	Transient Occurrence, Low-Incident Lightning Areas	1-63
1-11	Generalized Characteristics for Surge Arresters by Type	1-65
1-12	Typical Maximum Clamp Voltage for Gap Arresters	1-68
1-13	ZNR Type Devices (Molded Case Type) Typical Characteristics	1-70
1-14	High Energy ZNR Surge Arrester Typical Characteristics	1-70
1-15	Test Results for Parallel-Connected ZNR	1-71
1-16	Transients Projected to Occur on Externally Exposed Line in High-Lightning Incident Area Over 10-Year Period	1-73
1-17	Transient Surges, Line-to-Ground	1-81
1-18	Transient Surges, Line-to-Line	1-82
1-19	Transient Surges Projected to Occur in 10-Year Period on Externally-Exposed Landlines	1-83
1-20	Grounding Electrode Conductor Size	1-107
1-21	Equipment Grounding Conductor Size Requirement	1-110
1-22	Size of Equipment Ground Cables	1-119
1-23	Minimum Torque Requirements for Bolted Bonds	1-141
1-24	Compatible Groups of Common Metals	1-143
1-25	Bond Protection Requirements	1-144
1-26	Protective Finishes for Bond Members	1-145
1-27	Metal Connections for Aluminum and Copper Jumpers	1-147
1-28	Attenuation Correction Factors for Reinforcing Steel	1-157
1-29	Relative Conductivity and Relative Permeability of Common Metals.	1-163
1-30	Soil Resisitivity (Ohm-m)	1-179
3-1	Frequency Properties of Standard Sizes of Honeycomb	3-30

CHAPTER 1

NEW FACILITIES DESIGN CRITERIA

1.1 INTRODUCTION.

This chapter presents the design, installation practices, test and acceptance procedures associated with the incorporation of effective grounding, bonding, and shielding for a new facility.* The major elements of the facility covered are the (1) earth electrode subsystem, (2) fault protection subsystem, (3) lightning protection subsystem, (4) signal reference subsystem, (5) bonding, and (6) shielding. Design and construction steps for these six elements are contained in the following sections:

1.2 Earth Electrode Subsystem
1.3 Lightning Protection for Structures
1.4 Fault Protection Subsystem
1.5 Signal Reference Subsystem for New Facilities
1.6 Grounding, Philosophy for Equipments Processing National Security Related Information
1.7 Bonding Practices
1.8 Shielding
1.9 Common-Mode Noise and Instrumentation
1.10 EMP Protection
1.11 Military Mobile Facilities
1.12 Fences
1.13 Inspection and Test Procedures for a New Facility

Secure transmission facility requirements are covered in Section 1.6. Supplemental measures which are needed to be incorporated in a facility to help reduce common-mode and instrumentation noise problems are presented in Section 1.9, Common-Mode Noise and Instrumentation. The special construction practices recommended to reduce facility vulnerability to the electromagnetic pulse (EMP) threat are contained in Section 1.10, EMP Protection. Tactical grounding requirements are presented in Section 1.11, Military Mobile Facilities. Inspection and Test Procedures for a New Facility, provided in Section 1.13, should be utilized in verifying that recommended practices and procedures are properly implemented and to help establish a perform ante baseline against which future measurements can be compared.

To obtain optimum performance of electronic equipment and personnel safety while providing adequate protection against power system faults, EMP, and lightning strikes, thorough consideration must be given to the grounding system for the building; to the bonds needed and the method of their implementation and to the shielding needed throughout the building for personnel safety and equipment interference control. For a new facility, the requirements in each of these areas are defined and appropriate design steps set forth to assure that the necessary measures are incorporated into the final structure and equipment installation.

---

*A new facility is considered to be one of new construction or an existing one that will undergo major renovation or major equipment reconfiguration. The project engineer shall determine the grounding requirements whenever minor equipment reconfigurations are accomplished in existing facilities. Refer to Chapter 2 for additional information.

1.2 EARTH ELECTRODE SUBSYSTEM. The earth electrode subsystem establishes the electrical connection between the facility and earth. This connection is necessary for lightning protection, useful in power fault protection, and and in the minimization of noise. The system should be tailored to reflect the characteristics of the site and the requirements of the facility.* It must be properly installed and steps must be taken to assure that it continues to provide a low resistance connection throughout the life of the structure. To achieve these objectives, first determine the electrical and physical properties of the site, design an earth electrode subsystem appropriate for the site, install the subsystem in accordance with the recommended procedures, and finally, measure the earth resistance of the subsystem to verify that it meets the recoin mended goals or design specifications.

1.2.1 Determination of Site Parameters (Site Survey). Before beginning the design, conduct a survey of the site where the earth electrode subsystem is to be installed. Through this survey, determine the resistivity of the soil, identify significant geological features, gather information on architectural and landscape features which may influence the design of the subsystem, and review local climate effects. (If possible, conduct this survey in advance of the final site selection in order to avoid particularly troublesome e locations.)

1.2.1.1 Soil Resistivity. As the first step of the site survey, measure the resistivity of the soil at several points over the area of the planned facility. For even the smallest facility, the effective facility area in so far as the electrode subsystem is concerned is assumed to be at least 15 meters by 15 meters (50 feet by 50 feet). For larger facilities, the facility areas are assumed to extend at least 6 meters (20 feet) beyond the basic building or structural outline, i.e., the ground floor plan, substation grid, tower footing, transformer housing, etc. It is necessary that the soil resistivity be known over the area encircled or covered by the earth electrode subsystem.

a. A single soil resistivity measurement is made using the four-probe method (see Volume I, Section 2.4) in the following manner:

(1) At a location near the center of the site, insert the four short probes supplied with the earth resistance test set into the soil in a straight line as illustrated in Figure 1-1. A convenient probe spacing of 6 to 9 meters (20 to 30 feet) is recommended as a start. If probes are not supplied with the test set or if they have been lost or misplaced, four metal (steel, copper, or aluminum) rods, 1/4 to 3/8 inch in diameter and 12 to 18 inches in length, may be used. Drill and tap No. 6-32, 8-32, or 10-24 screws, according to rod size and securely fasten the test set leads to the rods. Clamps may also be used for connecting the leads to the probes.

---

*The relationship between the performance of an electronic system and the resistance of the earth ground is unclear. The value of 10 ohms earth electrode resistance recommended in Section 1.2.2.la represents a carefully considered compromise between overall fault and lightning protection requirements and the estimated relative cost of achieving the resistance in typical situations. In locations characterized by high soil resistivities, to achieve 10 ohms could be very expensive. In such locations, examine all elements of the site, consider the requirements of the planned facility, and then choose the best compromise based on soil conditions, relative costs, etc.

(2) Following the manufacturer's instruction, obtain a resistance reading, R, with the test set.

(3) Convert the probe spacing, A, to centimeters. (See Page xvi for metric conversion factors.)

(4) Compute resistivity from

$$\rho = 6.28AR \qquad \text{(in ohm-cm)} \qquad (1\text{-}1)$$

EXAMPLE: Assume that a resistance of 2 ohms is measured with probe spacings of 20 feet.

Convert 20 feet to centimeters: 20 ft x 30.5 cm/ft = 610 cm

Calculate resistivity ρ = 6.28 x 610 x 2 = 7662 ohm -cm

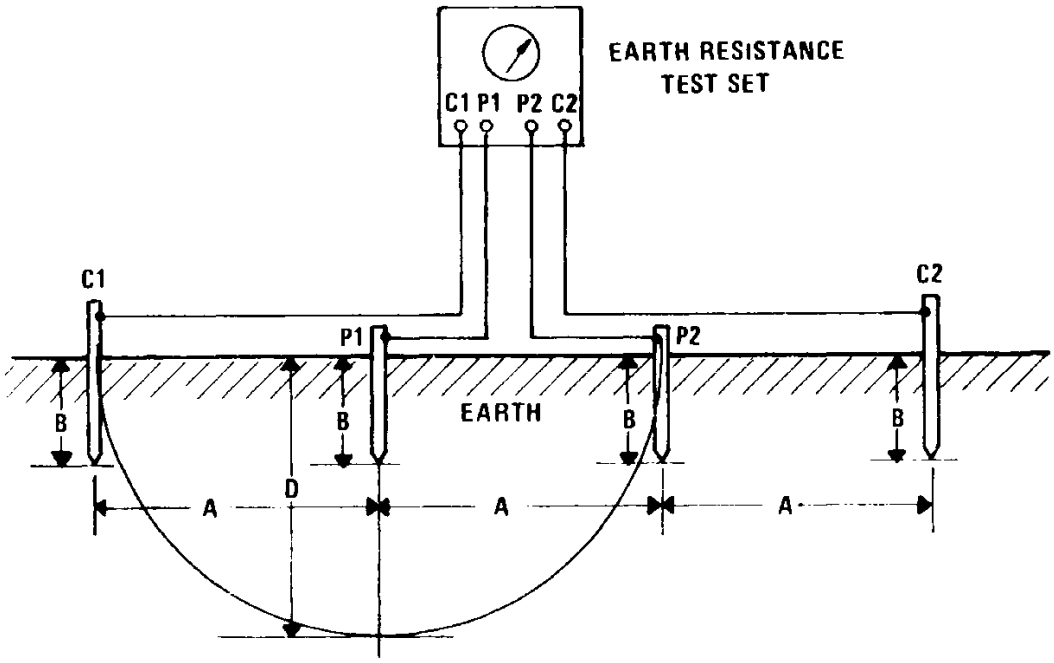

A = ELECTRODE SPACING
B = DEPTH OF PENETRATION < A/20
D = DEPTH AT WHICH RESISTIVITY IS DETERMINED = A

Figure 1-1. Measurement of Soil Resistivity

b. The reading obtained indicates the average resistivity of the soil in the immediate vicinity of the test area. A resistivity profile of the site requires that the above procedure be repeated at many sample locations over the region being mapped. For small sites up to 2500 square feet (232 square meters), make at least one measurement at the center of the site and at each of the four corners of a 50-foot square as shown in Figure 1-2. Drive a stake or marker at the locations shown. Position the potential and current probes in a straight line with the stake or marker centered between the probes. Make a resistance measurement at each location and calculate the resistivity as in step a-4 above. Take the average of the five readings as the resistivity for the soil at the site. If possible, soil measurements should be made during average/normal weather conditions. Measurements should never be made immediately after a rain or storm.

c. For larger sites, make measurements every 100 to 150 feet (30 to 45 meters) over the site area. Include in the site area the locations of support elements such as transformer banks, towers, engine-generator buildings, etc. Choose a sufficient number of test points to give an indication of the relative uniformity of the soil composition throughout the area. Be particularly alert for the presence of localized areas of very high or very low resistivity soils.

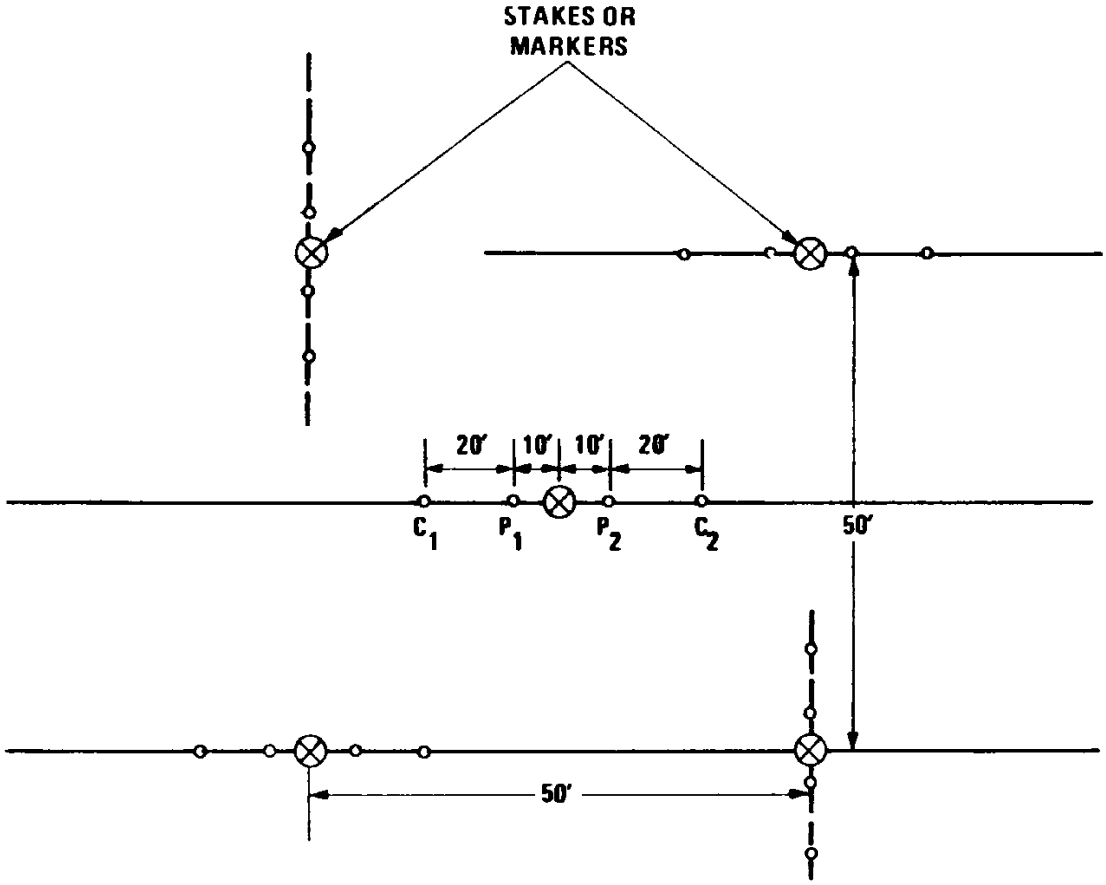

NOTE: NOT DRAWN TO SCALE.

Figure 1-2. Resistivity Determination of a Small Site

1.2.1.2 Geological Effects.

a. Identify the significant geological features of the site. Specifically, attempt to establish:

(1) the distribution of major soil types (see Volume l, Section 2.3.2) to include the locations of sand and gravel deposits,

(2) major rock formations,

(3) the presence of water sources to include underground streams, and

(4) the depth of the water table.

Utilize test borings, on site inspections, studies of local maps, and interviews with local construction companies, well drillers, and other local personnel to obtain the desired information.

b. Evaluate the information provided by these sources for indications of particularly troublesome (or particularly helpful) characteristics that may influence the design or installation of the earth electrode subsystem of the facility.

1.2.1.3 Physical Features. Locate and identify those other physical features that will influence the general placement of the earth electrode subsystem, the location of test and access points, physical protection requirements, and the cost of materials and installation. For example, indicate on the general site plan:

a. the planned physical layout of the building or structure,

b. locations of paved roads and parking lots,

c. drainage, both natural and man-made, and

d. the location of buried metal objects such as pipes and tanks.

1.2.1.4 Local Climate.

a. Review local climatic conditions and determine the annual amount and seasonal distribution of rainfall, the relative incidence of lightning, and the depth of freezing (frost line) typical of the area. Obtain the rainfall and frost line information from the local weather service; project the relative lightning incidence from the isokeraunic maps given in Volume I, Section 3.4, Figures 3-2 and 3-3.

b. Record the data and make it a part of the facility files for the site. Immediately, however, use this information to aid in the design of the earth electrode subsystem for the facility to be constructed at the site.

1.2.2 Design Procedure.

1.2.2.1 Selection of Electrode Configuration. Determine what type of earth electrode subsystem is most appropriate for the facility (complex, building, structure, transformer bank, substation, etc). The directed configuration is a ring ground outlined in paragraph 5.1.1.1.3 of MIL-STD-188-124A. If this configuration cannot be employed, alternate configurations meeting these requirements are described in Section 1.2.2.3 of this volume.

a. Establish the primary functional requirements to be met by the earth electrode subsystem. For example.

Lightning. For a facility located in an area of high lightning incidence or a high degree of exposure to lightning, or both, (see Volume 1, Section 3.4) the earth electrode subsystem must safely dissipate the lightning energy without melting conductors or overheating the soil (see Volume I, Section 2.8.2.2). Also, the subsystem must minimize step voltages in areas where personnel are present.

Impulse Properties and RF Impedance Characteristics. If the antenna counterpoise must serve as an earth electrode subsystem, it must have low rf impedance properties.

Mobility. Mobile facilities or temporary transportable facilities will generally not justify the installation of an extensive fixed electrode subsystem. For such facilities, install only a basic system capable of providing the minimum acceptable lightning and personnel fault protection (see Section 1.11).

Resistance. At fixed C-E facilities, the earth electrode subsystem should exhibit a resistance to earth of 10 ohms or less. If 10 ohms is not economically feasible by the ring ground, alternate methods should be considered. Paragraph 5.1.1.1.3.2 of MIL-STD-188-124A refers. Resistance measurements using the fall-of-potential method shall be accomplished in 3-month increments for 12 months following installation. Measurements shall be conducted in 21-month intervals after the first year.

b. Evaluate local conditions.

Soil resistivity. Is soil resistivity low (< 5000 ohm-cm), average (5000 to 20,000 ohm -cm), or high (> 20,000 ohm-cm)? The higher the soil resistivity, the more complex (and expensive) will be the electrode subsystem necessary to achieve 10 ohms resistance.

Moisture content. Is the water table near the surface or far below grade, and is it subject to large seasonal variations? Design the earth electrode subsystem so that it makes and maintains contact with soil that stays damp or moist year round if at all possible. Penetration of the permanent water table is highly desirable.

Frost line. How deeply does the frost line extend, even during coldest periods? The resistivity of soil rises greatly (see Volume I, Section 2.3.3) as the soil temperature drops below 32° F. Thus for maximum stability of electrode resistance, the subsystem should penetrate far enough into the soil so that contact is always maintained with unfrozen soil. The earthing techniques described in this chapter are not directly applicable to permafrost. In permafrost, fault protection must be provided through the use of metallic returns accompanying the power conductors to insure the existence of a return path to the transformer or generator.

Personnel protection in permafrost requires an even greater emphasis on the bonding of all metal objects subject to human contact and to the power system neutral and is described in Volume I, Chapter 2. Because of the high resistance of permafrost, stray earth currents can be expected to be minimal with consequently reduced concern with inter-facility power frequency noise problems (see Volume I, Section 2.1.3). In the event that earth-current related noise problems exist, the common-mode rejection techniques described in Volume I, Section 6.4 should be applied.

Rock Formations. Are major rock formations near the surface and are they large enough to influence the design and layout of the earth electrode subsystem? In regions of shallow bedrock, vertical ground rods may not be usable and horizontal grids, wires, or plates must be used. Large rock outcropping or subsurface boulders may force the alternate routing of conductors or the placement of rods. There is no need to incur the expense of drilling holes in rock to insert rods or lay wires because the resistivity of rock is so high that generally the rods or wires would be ineffective.

Architectural layout. Design the earth electrode subsystem so that it will not be materially influenced by the weather shielding effects of parapets and overhangs. Lightning down conductor placement and routing will frequently be influenced by architectural considerations. Design the earth electrode subsystem to accommodate such considerations by providing convenient connection points near the down conductors. Route the interconnecting cable of the earth electrode subsystem near down conductors to avoid long extensions between the down conductor and the effective grounding point. Configure the earth electrode subsystem such that convenient connections are possible between the earth electrode subsystem and grounding conductors of the power and signal ground systems inside the facility.

Landscape features. Preferably locate ground subsystem conductors under sodded areas or those otherwise covered with vegetation. Locate conductors to take maximum advantage of the wetting effects of runoff or drainage water from the roof, parking lots, etc. Try to avoid placing major portions of this earth electrode subsystem under extensive paved areas such as roads and parking lots.

c. Considering the relative advantages and disadvantages given in Table 1-1, choose a basic type of electrode most appropriate for meeting the functional requirements of the facility at the site under construction.

d. Estimate the relative costs to meet the objectives with the different types of configurations. Include the cost of materials, installation costs, and relative maintenance and upgrading costs.

Table 1-1

Relative Advantages and Disadvantages of the Principal Types of Earth Electrodes

Type	Advantages	Disadvantages
Ring Ground	Straightforward design. Easy to install (particularly around an existing facility). Hardware readily available. Can be extended to reach water table.	Not useful where large rock formations are near surface.
Horizontal Bare Wires (Radials)	Can achieve low resistance where rock formations prevent use of vertical rods. Low impulse impedance. Good rf counterpoise when laid in star pattern.	Subject to resistance fluctuations with soil drying.
Horizontal Grid (Bare Wire)	Minimum surface potential gradient. Straight for ward installation if done before construction. Can achieve low resistance contact in areas where rock formations prevent use of vertical rods. Can be combined with vertical rods to stabilize resistance fluctuations.	Subject to resistance fluctuations with soil drying if vertical rods not used.
Vertical Rods	Straightforward design. Easiest to install (particularly around an existing facility). Hardware readily available. Can be extended to reach water table.	High impulse impedance. Not useful where large rock formations are near surface. Step voltage on earth surface can be excessive under high fault currents or during direct lightning strike.
Plates	Can achieve low resistance contact in limited area.	Most difficult to install.
Incidental Electrodes (Utility pipes, building foundations, buried tanks)	Can exhibit very low resistance.	Little or no control over future alterations. Must be employed with other made electrodes.

1.2.2.2 Calculation of Earth Resistance.

Once the most appropriate configuration is chosen for the facility, calculate the resistance to earth for the configuration. If the calculated resistance meets the design goal (or requirement), complete the design to include all necessary interconnections. To illustrate this design procedure, assume that a 100 ft x 160 ft rectangular configuration like that shown in Figure 1-3 is initially chosen. Further, assume that the soil resistivity measurements made during the site survey showed an average resistivity of 10,000 ohm-cm for the area. In addition, the site survey indicated that all rock formations are at depths greater than 10 feet; the water table never drops more than 5 feet below grade; and the frost line extends only to 1 foot below grade. Therefore, 10-foot ground rods are initially selected for evaluation. (The minimum rod diameter required in MIL-STD-188-124A, para 5.1.1.1.4 is 3/4 inch.)

a. Determine the resistance of one of the ground rods from Figure 1-4. First, place a straight edge between the point marked 3/4 on line “d” and the point marked 10 on line "ℓ". Indicate on line “q” where the straightedge crosses. Next, place the straightedge between the point just marked on “q” and the 10,000 ohm-cm point on the vertical line labeled “Resistivity.” Read the resistance as 32 ohms at the point where the straightedge crosses the vertical line labeled “Resistance.”

b. Assume an initial spacing of 20 feet or twice the rod length (see Volume I, Section 2.6.2) between rods. Figure 1-3 shows that 26 rods are required to encircle the structure. Use Figure 1-5 to determine the relative lowering of the resistance of one rod that is produced by 26 rods in parallel. (The answer is about 5.5 percent.) Thus the resistance of the 26 rods in 10,000 ohm-cm soil is

$$R = 32 \times 0.055 = 1.76 \text{ ohms.}$$

Figure 1-5 primarily applies to ground rods laid out in a straight line or around the perimeter of a site whose dimensions are large with respect to the rod spacing. If the rods are distributed in a grid pattern, as will frequently be done for substations, use Figure 1-6 to estimate the net resistance. In many instances, the answers provided by Figures 1-5 and 1-6 will agree. For this example, the resistance multiplier given by Figure 1-6 for 26 rods over an estimated area of 16,000 square feet (100' x 160') is 0.056 for a net resistance of 1.9 ohms.

1.2.2.3 Alternate Configurations. Nonideal sites will frequently be encountered. For example, large rock formations may be present which prevent the uniform placement of ground rods around the site; bed rock may be relatively near the surface; the water level may drop to several feet below grade; the soil resistivity may be very high; or architectural and landscape requirements may preclude locating ground rods at particular points. In such cases, modify the electrode configuration to conform to the constraints while achieving the desired resistance. Typical suggested alternatives are:

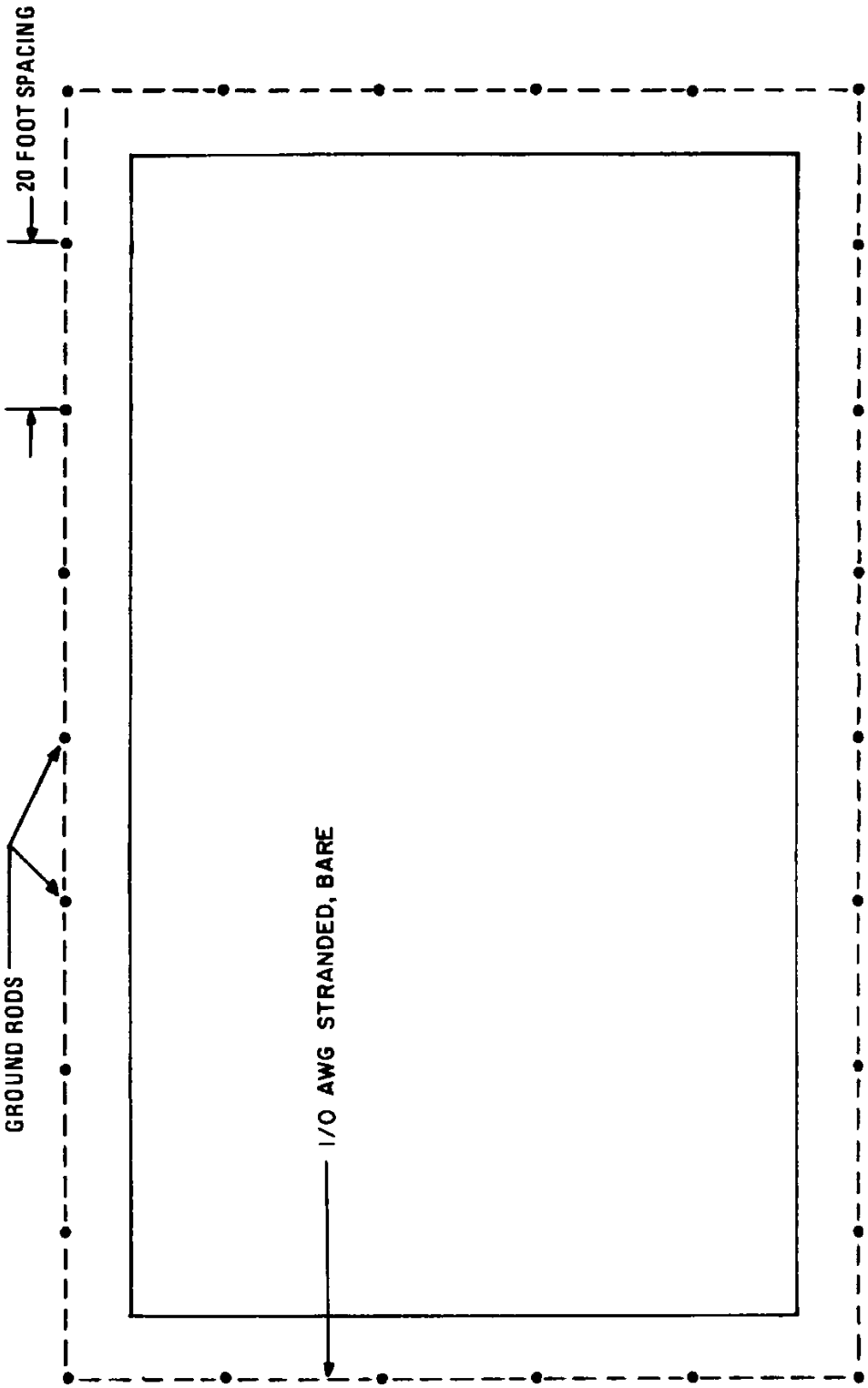

Figure 1-3. Minimum Earth Electrode Subsystem Configuration for Rectangular Shaped Facility

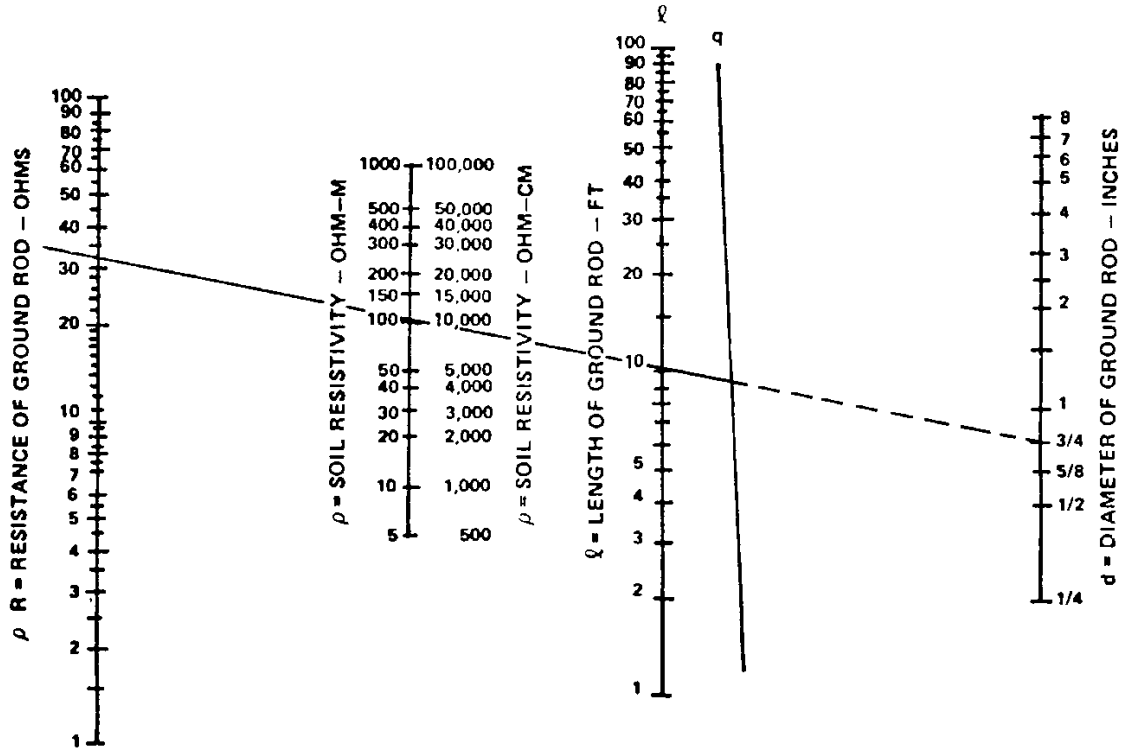

Figure 1-4. Nomograph for Determining the Resistance to Earth of a Single Ground Rod (l-1)

a. Change number of ground rods. The above example shows that fewer rods could be used and still meet the 10-ohm goal. Thus, if rock outcropping were present at certain points around the perimeter, it would be permissible to omit some of the rods. Since 10 ohms (the net effective resistance desired) is 31 percent of 32 ohms (the resistance of one 10-foot rod in soil of 10,000 ohm-cm), Figure 1-5 shows that as few as 3 rods would be acceptable. On the other hand, if the soil resistivity is very high more rods will be necessary.

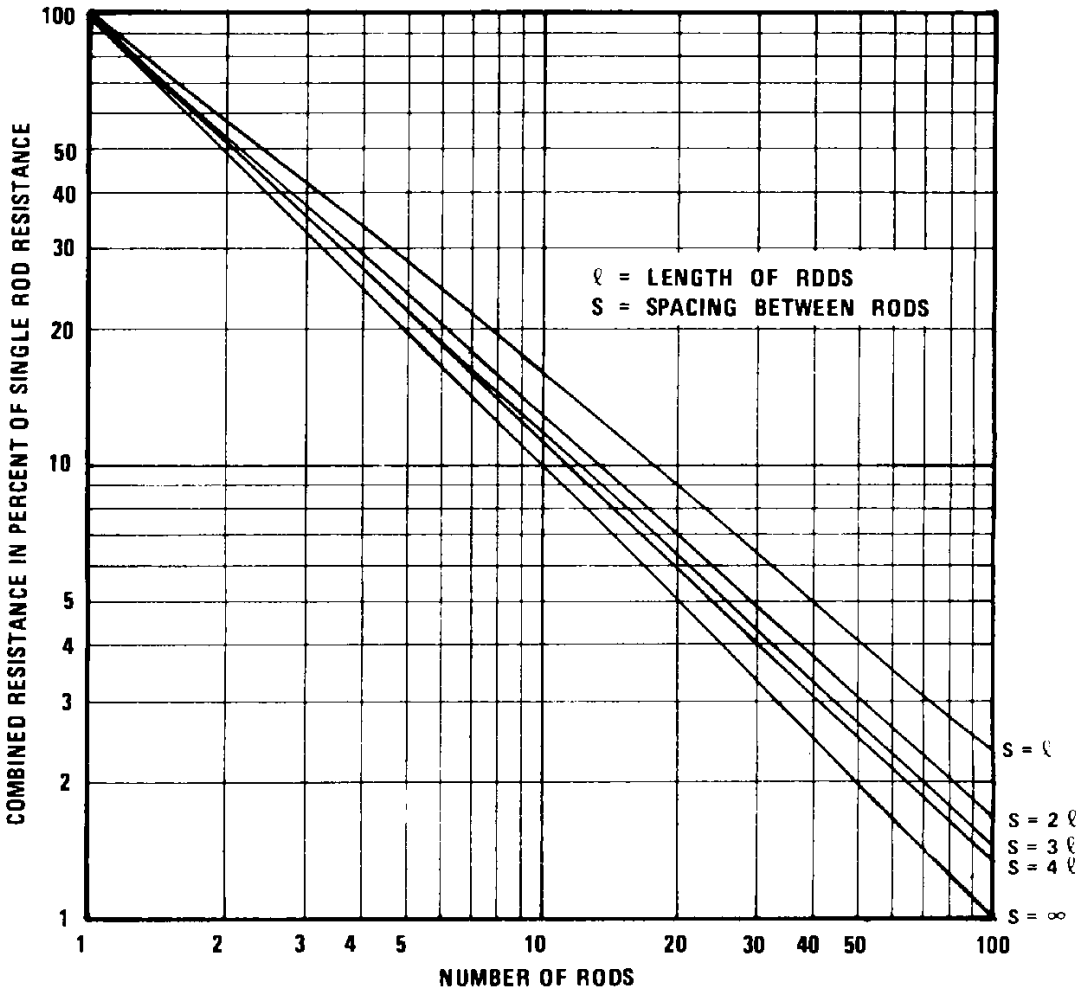

Figure 1-5. Effective Resistance of Ground Rods When Arranged in a Straight Line or a Large Circle

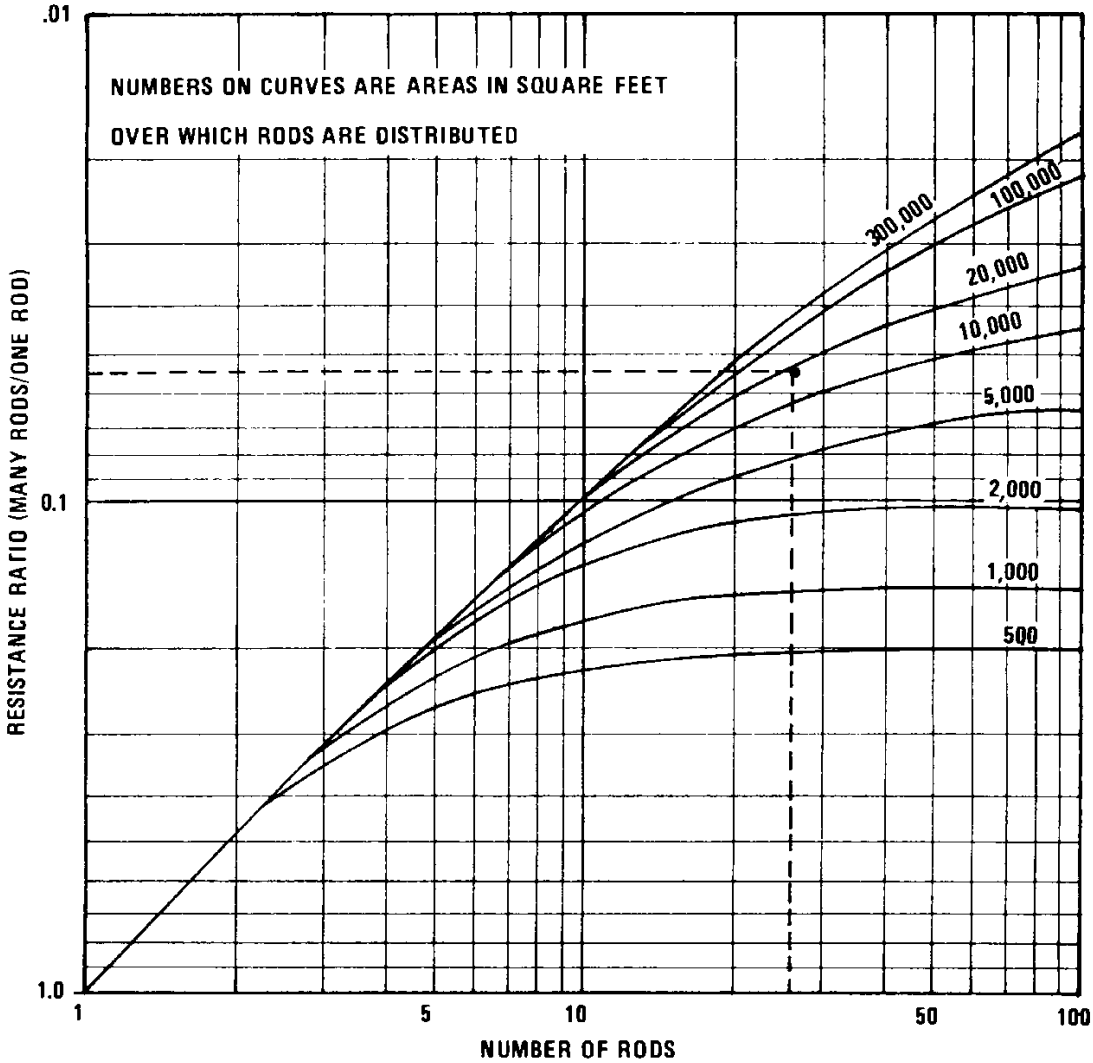

Figure l-6. Graph of Multiple-Rod Resistance Ratio (l-2)

b. Use longer ground rods. Rods longer than 10 feet (can be realized by assembling 10-foot sections) may be used in high resistivity soil in place of a larger number of 10-foot rods. Where the ground water table is greater than 10 feet below the surface at any season of the year or where the frost line is greater than 10 feet, use the longer rods to maintain contact with the permanently moist, unfrozen soil. Use Figure 1-4 to estimate the length needed, given the soil resistivity.

c. Use horizontal wires or grids instead of vertical rods. Where bedrock or other obstacles prevent the effective use of vertical rods, horizontal wires, grids, or radials should be used. (See Volume I, Section 2.6.1.2 for design data and equations.)

d. Lower the soil resistivity through chemical enhancement (salting). Where the above alternatives are not possible or are not cost effective, chemical enhancement is frequently the only choice left. Consult Volume I, Section 2.9 before deciding what to do in this regard.

1.2.3 Design Guidelines.

a. At each facility supplied by electric power, at least one ground rod should be installed near the service disconnecting means and bonded to the earth electrode subsystem. If the transformer is located on the site, a bare 1/0 AWG wire or cable should interconnect the ground rod at the transformer with the earth electrode subsystem at the first service disconnect for lightning protection purposes.

b. For lightning protection purposes, all facilities large or small or located in areas of low or high lightning incidence will require an earth electrode subsystem, described in the previous section. Facilities having structural extensions or equipment protrusions (such as antenna elements or towers) extending above the surrounding terrain should have a continuous earth electrode subsystem enclosing each facility or should have individual earth electrode subsystems connected together. See paragraph 5.1.1.3.8.1 of MIL-STD-188-124A.

c. Most installations will require many interconnected ground rods. The configuration shown in Figure 1-3 is adequate for most facilities. (The number of ground rods actually required at a given location will be determined by the resistivity of the soil and the configuration of the installation.) Three-meter (ten-foot) ground rods installed at 20-foot intervals around the perimeter of the structure provide good utilization of the effective radius of the rod while providing several points of contact with the earth. If longer rods are required to reach the water level, to make contact with lower resistivity soils, or to penetrate below the frost line, greater spacings may be employed. The nominal spacing between rods should be between one and two times the length of the rod however, it is necessary for a ground rod to be placed near each lightning down conductor, so spacings should be limited to not more than 50 feet in order to conform to lightning protection requirements (see Section 1.3.2.2.2).

d. The rods and interconnecting cable comprising the earth electrode subsystem should be positioned 0.6 to 1.8 meters (2 to 6 feet) outside the drip line of the building or structure to insure that rain, snow, and other precipitation wets the earth around the rods.

e. For facilities which do not conform to a rectangular or square configuration, lay out the rod field to generally follow the perimeter of the structure as illustrated in Figure 1-7.

f. Where two or more structures or facilities are located in the same general area (less than 200 feet) and are electrically interconnected with signal, control, and monitor circuits, either provide a common earth electrode subsystem, or interconnect the separate earth electrode subsystems with two buried bare cables. A common example of an installation where two separate structures are involved is a radar or communications site where the equipment shelter is adjacent to the antenna tower. Signal cables (both coaxial and waveguide), control cables, and power lines typically run between the tower and the shelter. The tower, being taller than the shelter, is more susceptible to lightning strikes. To minimize voltage differentials between the two structures, the facilities should effectively share a common earth electrode subsystem. Separate structures spaced closer than 6 meters (20 feet) should have a common earth electrode subsystem installed that encircles both facilities as shown by Figure 1-8. Figure 1-9 shows the recoin mended arrangement when separations equal to or greater than 6 meters (20 feet) but less than 60 meters (200 feet) are encountered. One of the interconnecting buried bare cables may also serve as a guard for buried signal or power cables. A typical site installation involving three structures separated less than 200 feet is illustrated in Figure 1-10. Structures or facilities having no interconnecting cables and separated by a distance greater than 60 meters (200 feet) generally do not require their earth electrode subsystems be interconnected.

g. There may be a number of incidental, buried, metallic structures in the vicinity of the earth electrode subsystem. These structures should be connected to the subsystem to reduce the danger of potential differences during lightning or fault protection; their connection will also reduce the resistance to the earth of the electrode subsystem. Such additions to the earth electrode subsystem should include the rebar in concrete footings, and buried tanks and pipes.

h. To minimize resistance variations caused by surface drying of the soil and by the freezing of the soil during winter and to minimize the possibility of mechanical damage to ground rods, connections, and interconnecting cables, the tops of ground rods should be at least 0.3 meters (1.0 foot) below grade level. Bury the bare 1/0 AWG interconnecting cable at least 0.45 meters (1.5 feet) below grade level. The recommended practices are illustrated in Figure 1-11.

i. If the subsystem is installed after foundations are poured, cables are installed, utility pipes installed, etc., make proper provisions for performing the needed interconnections between the water system, lightning down conductors, structural steel, buried lines and cables, and the electrodes.

j. Access to the earth electrode subsystem should be provided through the installation of one or more grounding wells at each site. Two acceptable types of grounding wells are illustrated in Figures 1-12 and 1-13. Either clay pipe or poured concrete may be used. Removable access covers must be provided. In very large structures, particularly those in which grounding grids are installed underneath, the grounding well or wells may be located inside the building in an accessible location. More than one grounding well may be necessary depending upon the size of the facility, the extent of the electrode subsystem, and the degree of accessibility to the electrodes deemed desirable. Locate at least one of the ground wells in an area with access to open soil so that resistance checks of the earth electrode subsystem can be made once the building is in use. The top view of a representative ground rod installation shown in Figure 1-14 illustrates the required connections to the signal reference subsystem, the lightning protection subsystem, and the facility ground network.

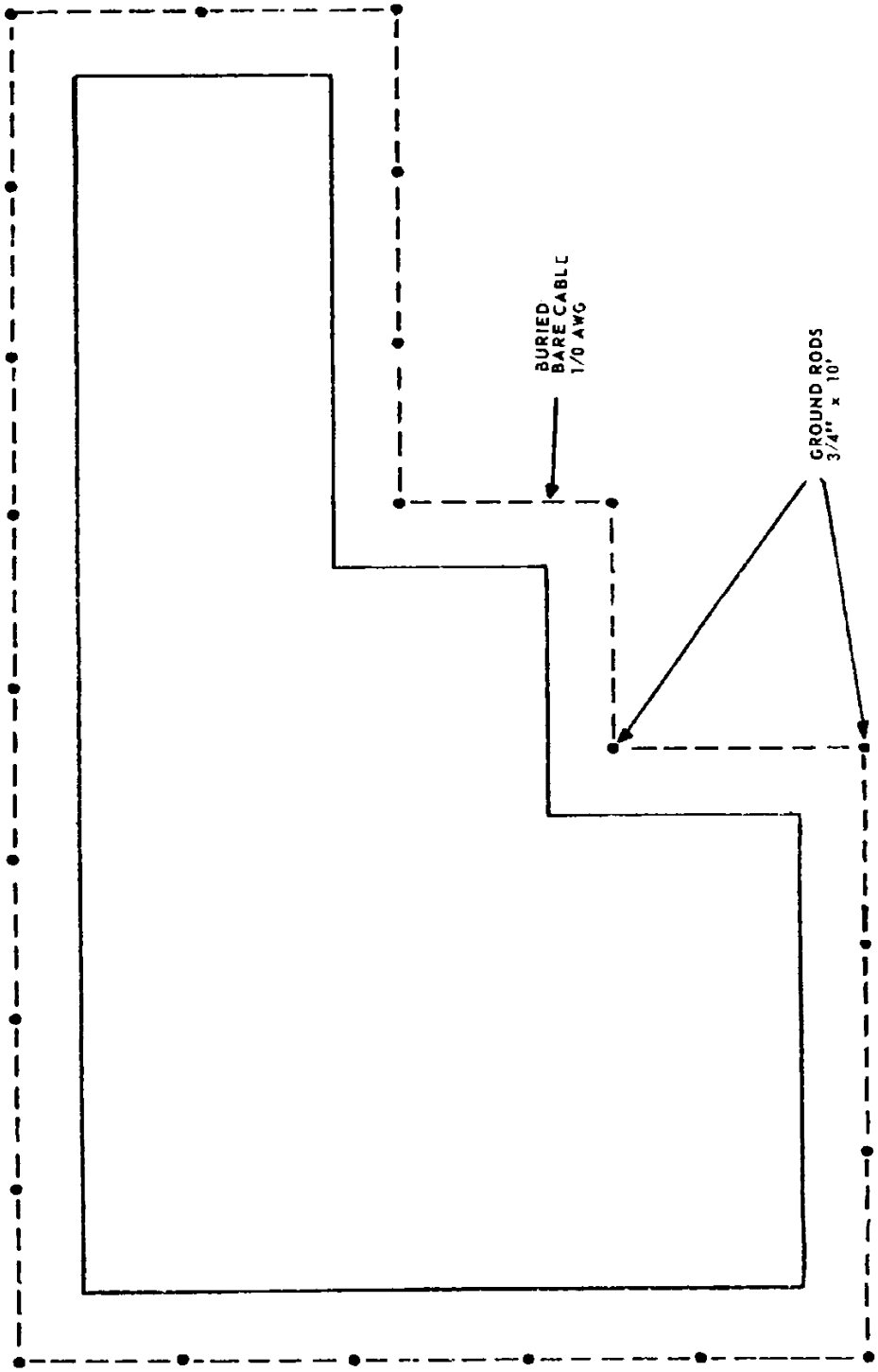

Figure 1-7. Electrode Configuration for Irregular Shaped Facility

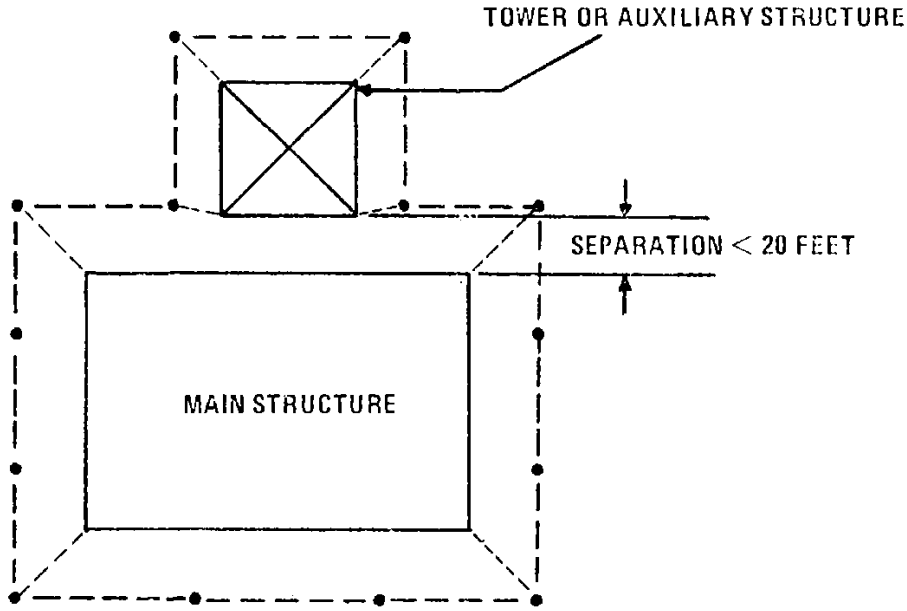

Figure 1-8. Electrode Configuration for Adjacent Structures

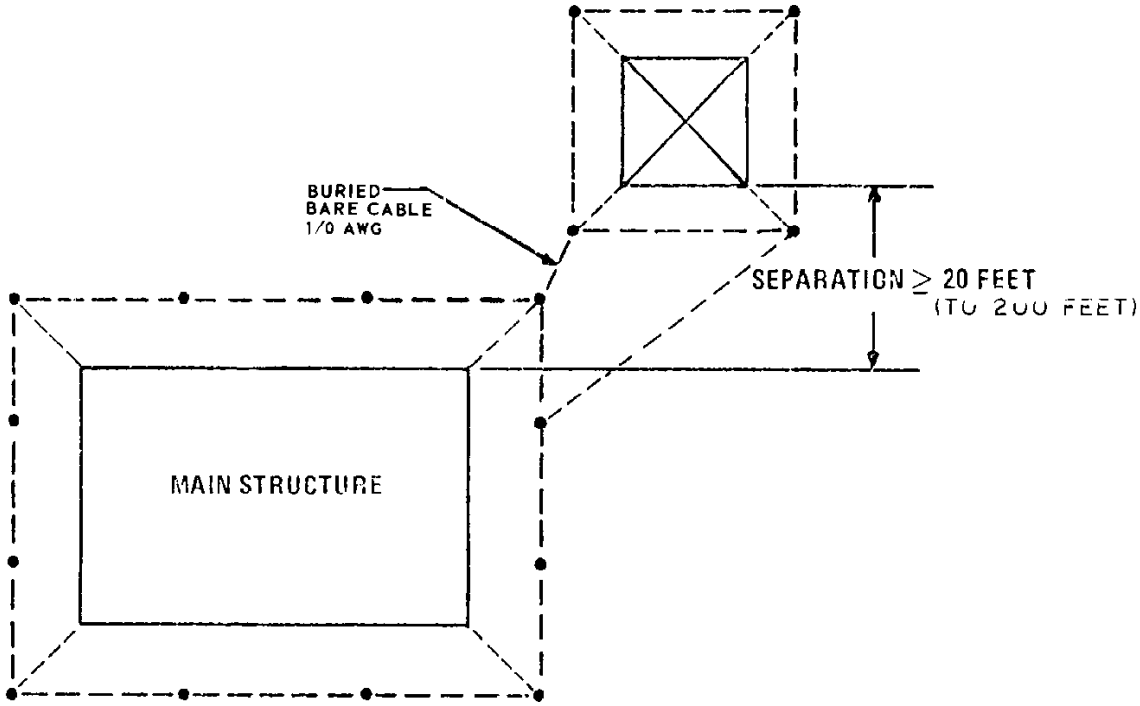

Figure 1-9. Electrode Configuration for Closely Spaced Structures

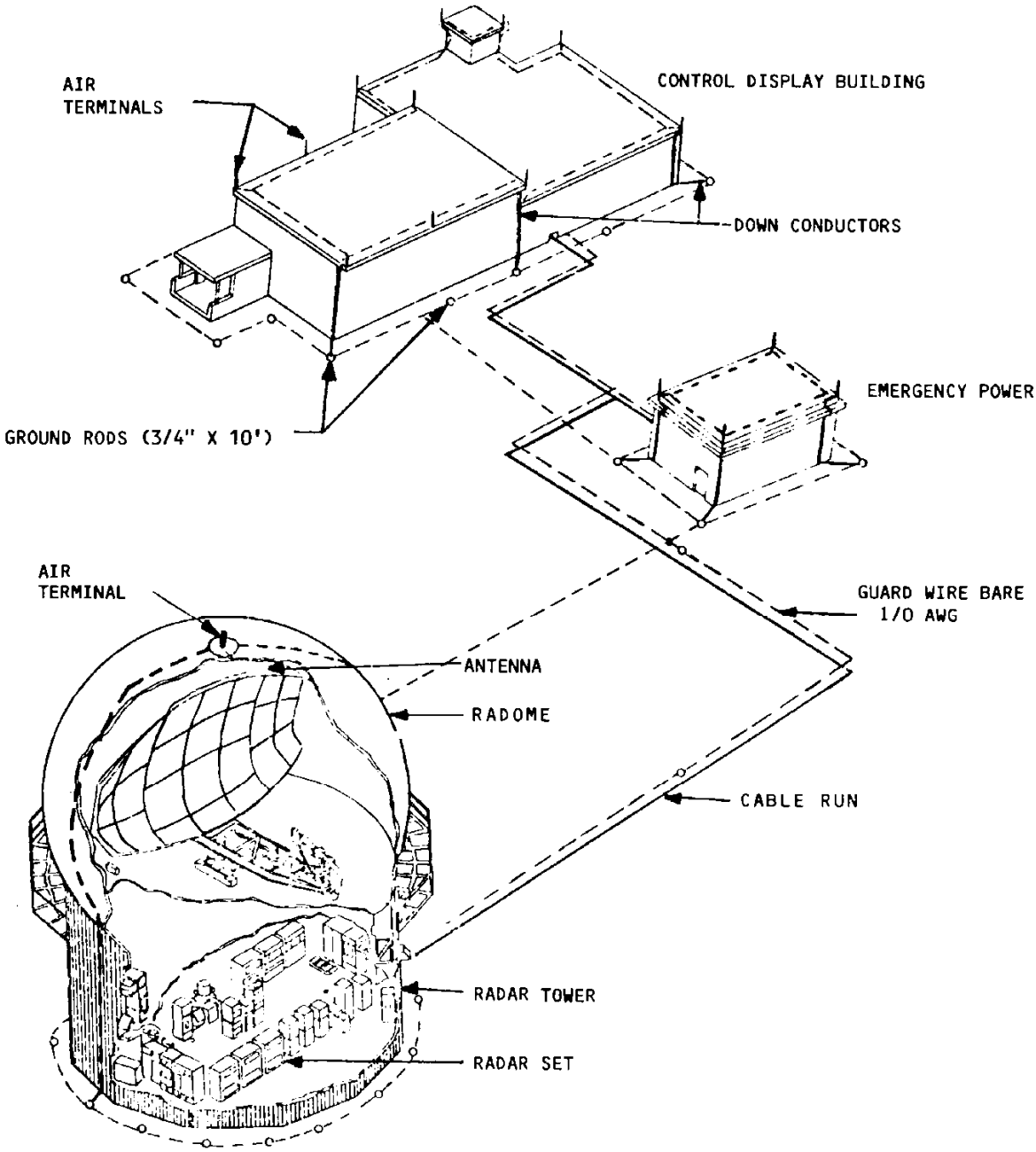

Figure 1-10. Grounding System for Typical Radar Installation

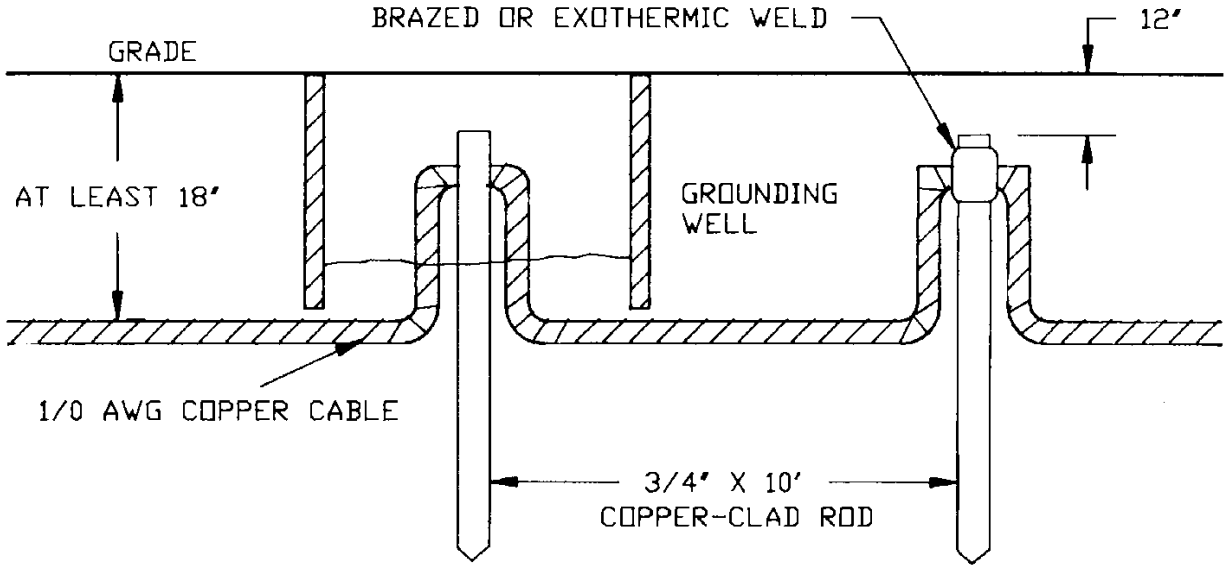

Figure 1-11. Details of Ground Rod/Earth Electrode Subsystem Installation

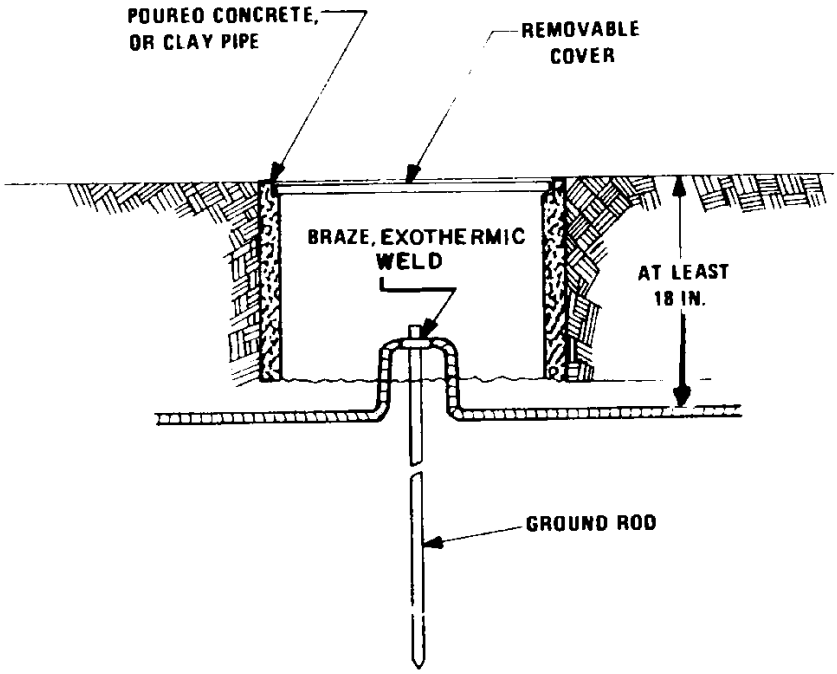

Figure l-12. Concrete Grounding Well

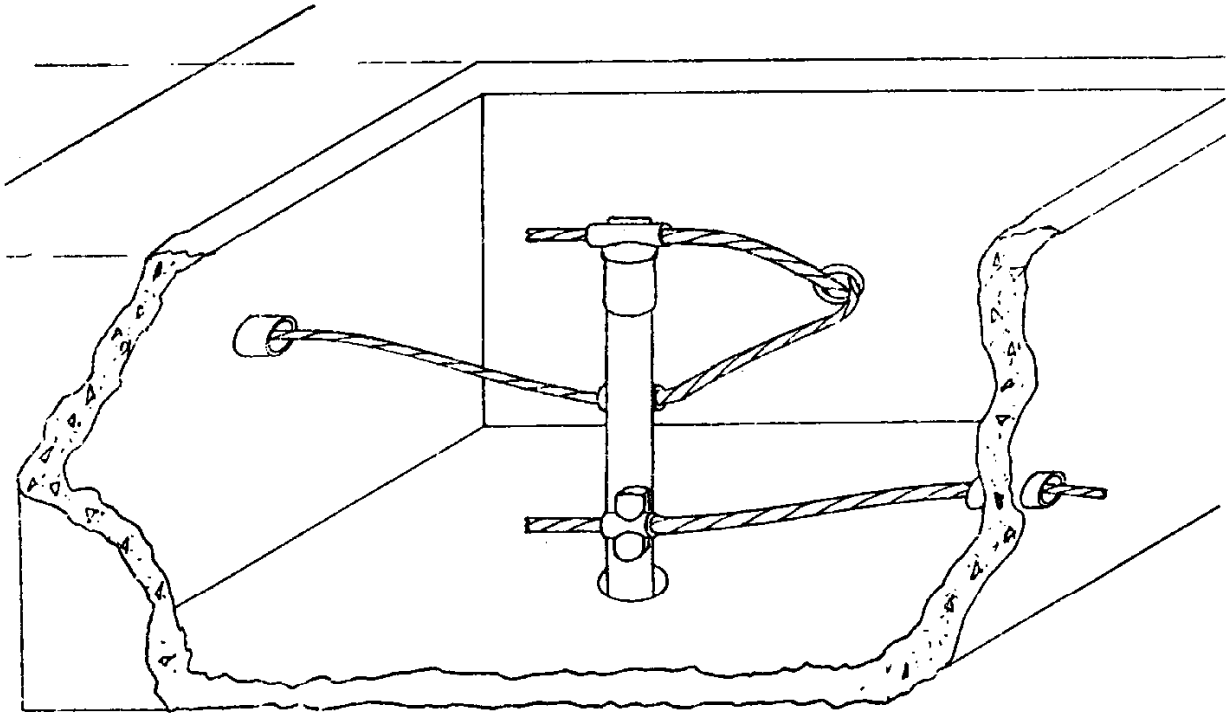

Figure 1-13. Typical Grounding Well Installation

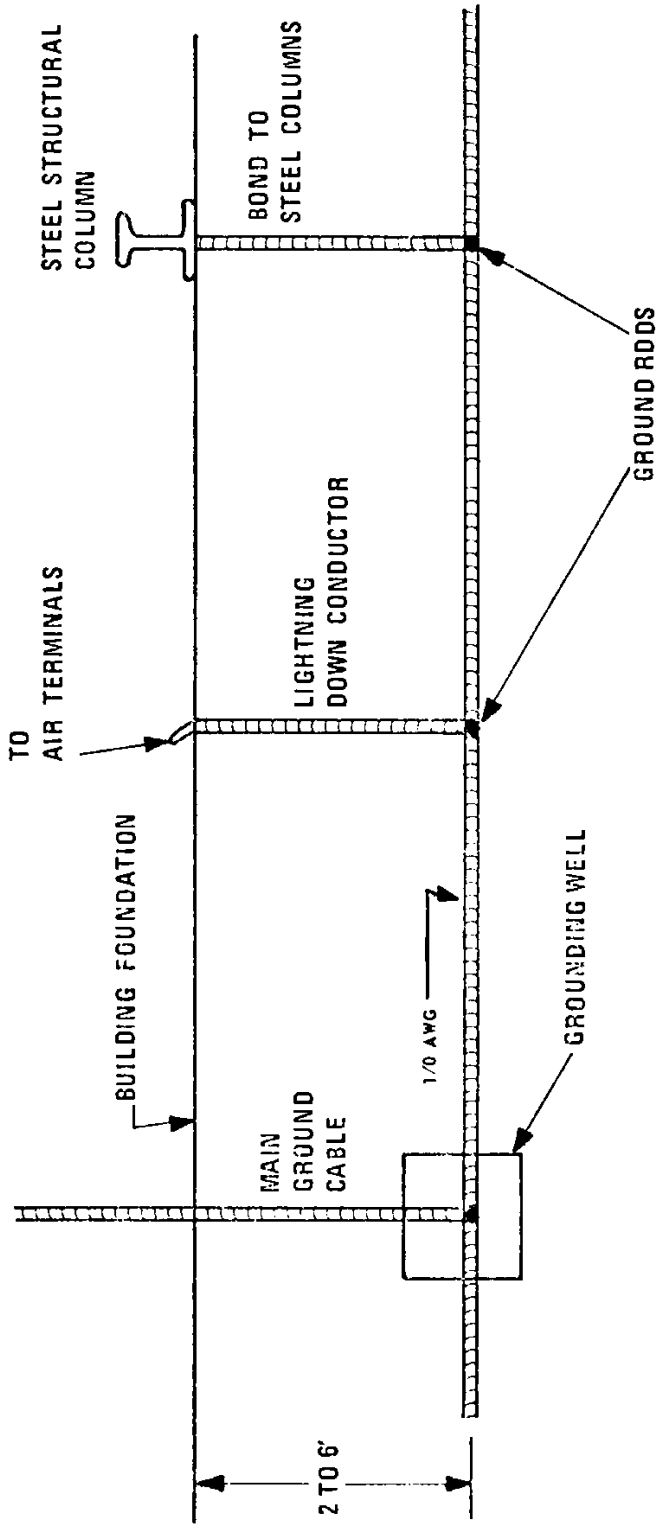

Figure 1-14. Connections to Earth Electrode Subsystem

1.2.4 Installation Practices.

a. Schedule the installation of the earth electrode subsystem so that any needed excavation, such as hole and trench digging, can be performed while other excavating, clearing, and earth moving operations associated with construction of the facility are in progress. If the subsystem is installed prior to completion of other earth moving operations, take the precautions necessary to assure that the components are not damaged or broken.

b. Take special care to ensure that all metallic lines, such as water lines, sewer lines (if metal), armored cable, etc., are carefully bonded to the earth electrode subsystem. Bonding jumpers of 1/0 AWG, or larger, bare copper wire are to be used for this purpose.

c. Before covering the earth electrode subsystem with backfill dirt or otherwise rendering it inaccessible, make visual checks of all joints and connections to check mechanical integrity, to verify the absence of voids or other indications of poor bonding, and to see that all required interconnections are made.

d. All bonds in concealed locations must be brazed or welded. Any bonds between dissimilar metals, such as between a copper wire and cast iron or steel pipe, must be thoroughly sealed against moisture to minimize corrosion. Bolted clamp connections are to be made only in manholes or in grounding wells and are to be readily accessible for verification of integrity.

e. Drive rods only into undisturbed earth or into thoroughly tamped or compacted filled areas. Rods and cables should be placed in the backfill around foundations only after the soil has been compacted or has had adequate time to settle. Do not drive or lay rods in gravel beds which have been installed for drainage purposes unless the rods extend through such beds far enough to provide at least 1.8 to 2.4 meters (6 to 8 feet) of contact with the undisturbed earth underneath. Do not lay horizontal cables in such beds under any circumstances.

f. Rods may be driven either by hand sledging, slide hammer, or with the use of power drivers. Use driving nuts to prevent damage to the driven end, particularly, if two or more sections are to be joined. Deep driven rods or those driven into hard or rocky soil generally require the use of power drivers with special driving collars to prevent damage to the rod.

g. Attach the interconnecting cable to the rods by brazing, welding, or clamping. Use bolted, clamped-type connections only if the tops of the rods are accessible through grounding wells and a periodic maintenance program is established to verify the integrity of the connection on a regular basis.

h. As rods are installed, make a one-time resistance check of each rod once it reaches its intended depth. After fulfilling the requirement of paragraph 5.1.1.1.7 of MIL STD 188-124A, resistance measurements shall be conducted on the earth electrode subsystem (as a system) at 3-month intervals for 12 months after installation and every 21 months thereafter. Use the measurement procedure outlined in Section 2.2.2.2.l.f. In this way a continuous check is made of the electrode design. If the measured resistance of the rods is less than the calculated resistance, the use of fewer rods may be acceptable as long as the minimum number required for terminating lightning down conductors is installed. On the other hand, if the measured resistance of the rods is greater than calculated, additional rods or longer rods should be installed during the construction stage rather than waiting until the facility is completed to add additional rods.

1.3 LIGHTNING PROTECTION FOR STRUCTURES.

1.3.1 Principles of Protection.

A structure, for lightning protection purposes, is defined as a building mast, tower, or similar self-supporting object other than power lines, power stations, and substations. To provide minimum protection for structures against direct lightning strikes, four requirements must be fulfilled:

a. an air terminal must be provided to intentionally attract the leader stroke,

b. a path must be established that connects this terminal to earth with such a low impedance that the discharge follows it in preference to any other,

c. a low resistance connection must be made with the earth electrode subsystem, and

d. a low impedance interface must be established between the earth electrode subsystem and earth.

These conditions are met when a lightning discharge is permitted to enter or leave the earth while passing through only conducting parts of a structure. The conditions can be satisfied by one of two methods, each having specific applications. These methods are:

a. the installation of an integral protection system consisting of air terminals interconnected with roof and down conductors to form the shortest practicable distance to ground, or

b. the installation of a separately mounted protection system of one of two types:

(1) a mast type consisting of a metal pole which acts as both air terminal and down conductor (a nonconductive pole may be used if provided with metal air terminals and down conductors connected to an earth ground), or

(2) two or more poles supporting overhead guard wires connected to an earth electrode subsystem with down leads.

1.3.2 Integral Protection System. When designing and installing an integral system of protection, perform the following steps:

a. Erect air terminals on the points of highest elevation and on other exposed areas to intercept the stroke before it has an opportunity to damage the structure or equipments or components mounted thereon. The terminal points must be placed high enough above the structure to eliminate the danger of fire from the arc.

b. Install roof and down conductors so that they offer the least possible impedance to the passage of stroke currents between the air terminals and the earth. The most direct path is the best. The radius of conductor bends shall not be less than 8 inches nor shall the angle of such bends be less than 90 degrees. Additional information may be found in para 3-12.5 of NFPA 78.

c. Distribute ground connections symmetrically about the circumference of the structure rather than grouping to one side.

d. Interconnect all metal objects close to the discharge path to prevent side flashes. (Representative interconnections are shown in Figure 1-15.)

e. Make certain that the mechanical construction of the air terminal system is strong and that the materials used offer high resistance to corrosion.

1.3.2.1 Air Terminals. Air terminals (lightning rods) must intercept, or divert to themselves, any lightning stroke that might otherwise strike the building or structure being protected. Antennas and their associated transmission lines/supporting structures shall be protected by air terminals meeting the requirements of 1.3.2.1.l.a rather than be dependent upon transient protection/suppression devices described in 1.3.3.5.22.

1.3.2.1.1 Size and Materials. To keep from exploding, igniting, or otherwise being destroyed, air terminals should be made of copper, aluminum, brass, or bronze. The minimum sizes are 1.27 cm (1/2 inch) in diameter for solid copper, brass, or bronze rods and 1.6 cm (5/8 inch) in diameter for solid aluminum rods.

a. Air terminals must extend at least 25.4 cm (10 inches) directly above the object being protected and be of sufficient height so as to provide a 1:1 zone of protection for adjacent objects (antennas and associated support/control towers, etc). Rather than choosing the shortest terminal which will provide this minimum height, all parts of the structure must be checked graphically or analytically in the manner described in the next section to determine if the zone of protection provided by the terminal is adequate. Where taller terminals are required to provide complete protection, adequate support and bracing as specified by ANSI-C5.1 (2.1.15) must be provided.

b. Where air terminals are mounted on or very near (less than 1.5 meters (5 feet)) to vents or stacks which emit potentially explosive or ignitable dusts, vapors, or gases, provide additional clearance.

(1) Over hooded vents emitting explosive substances under natural draft, the air terminals should extend at least 1.5 meters (5 feet) above the opening.

(2) Above open stacks emitting explosive substances under forced drafts, air terminals should extend at least 4.5 meters (15 feet) above the opening.

1.3.2.1.2 Location.

a. Locate air terminals along the ridges of gable, gambrel, and hip roofs in the manner illustrated in Figure 1-16.

b. Place them on the corners and along the edges of gently sloping roofs as shown in Figure 1-17. Gently sloping roofs are defined as (1) having a span of 40 feet or less with a rise-to-run ratio, i.e., pitch, of one-eighth or less or (2) having a span greater than 40 feet and a rise-to-run ratio of one-quarter or less.

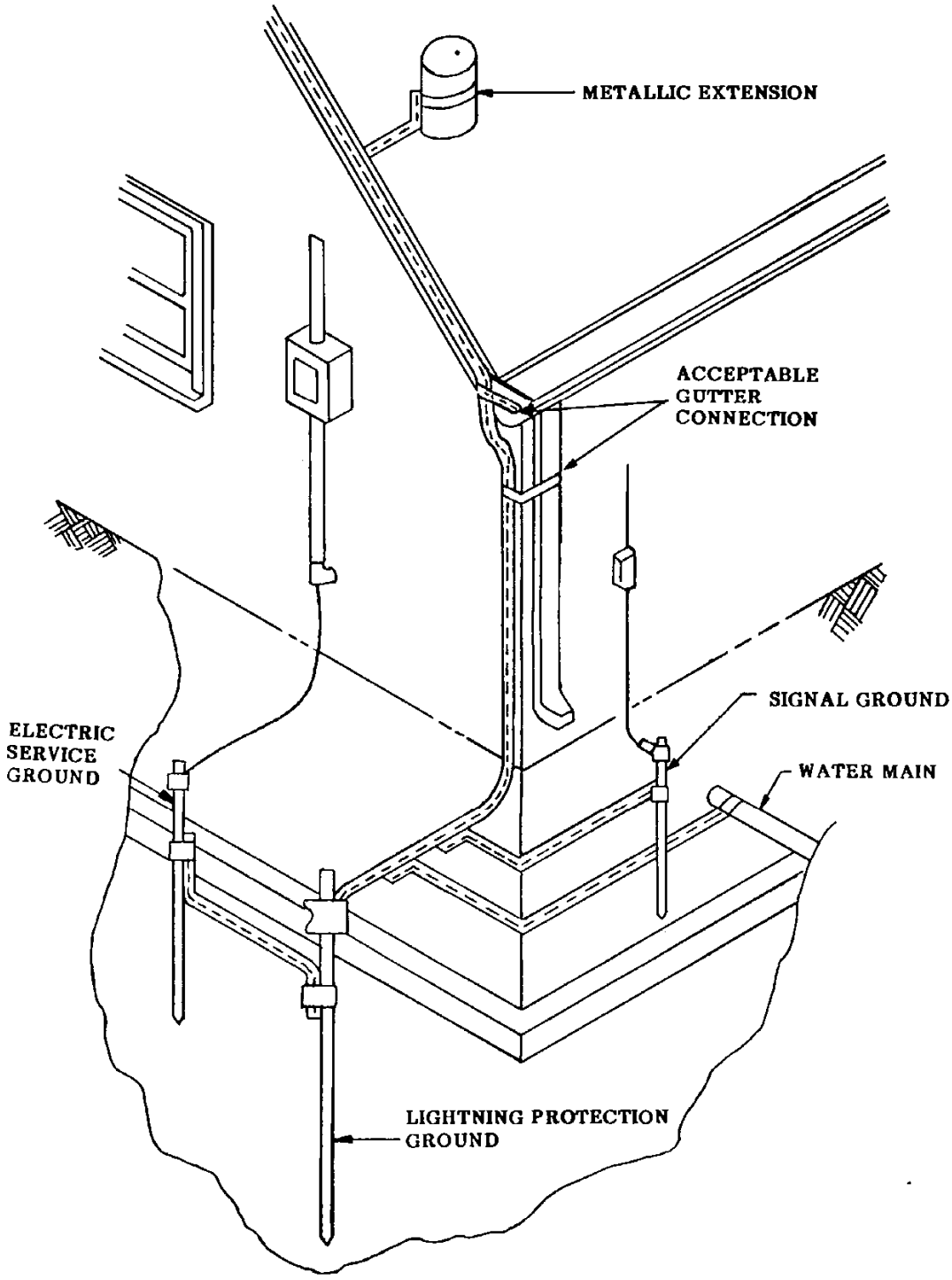

NOTE: CONNECTION TO WATER PIPE AS SHOWN

Figure 1-15. Grounding Practices for Lightning Protection

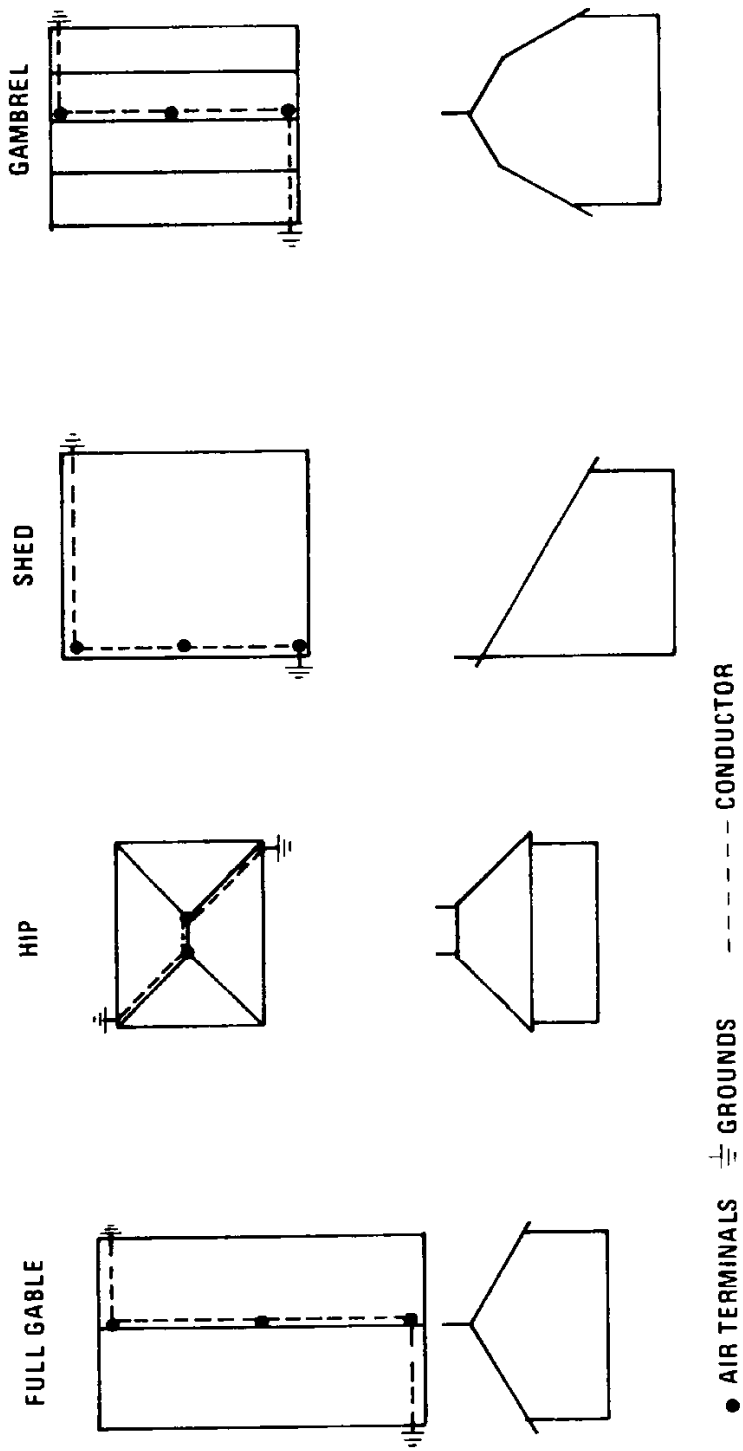

Figure 1-16. Location of Air Terminals for Common Roof Types

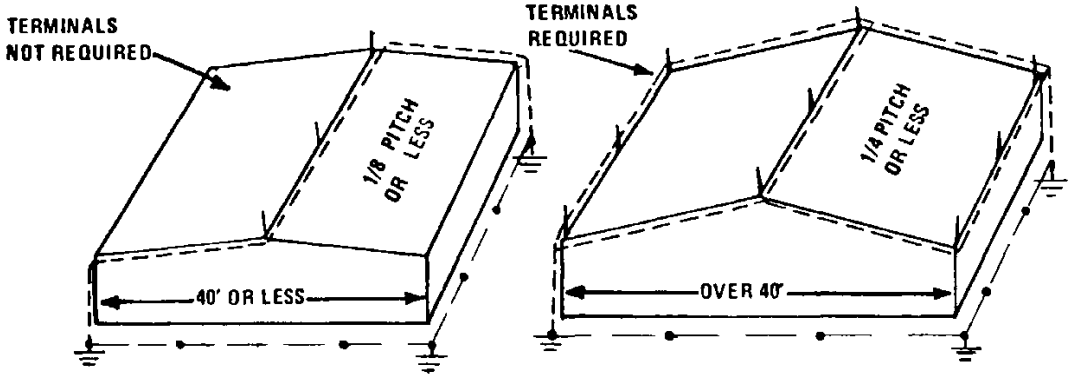

Figure 1-17. Location of Air Terminals on Gently Sloping Roofs

c. On flat roofs position the air terminals around the perimeter in the manner shown in Figure 1-18. Provide additional air terminals placed at 50-foot intervals over the interior of flat and gently sloping roofs which exceed 50 feet in width.

d. Terminals are to be provided within 2 feet of corners, the end of ridges, or edges of main roofs.

e. Terminals less than 24 inches in height are to be spaced 20 feet or less. Terminals 24 inches or taller may be placed at intervals not exceeding 25 feet.

f. Ensure that no part of the structure extends outside the cone of protection established by the air terminals. Determine the cone of protection by preparing a simple scaled profile drawing of the structure and then superimposing a 45-degree (a 1:1 cone of protection) triangle on the profile. The apex of the triangle should coincide with the tip of the air terminal whose protected zone is being verified, as illustrated in Figure 1-19. Alternatively for existing structures, the field expedient method illustrated in Figure 1-20 showing a 2:1 cone of protection can be used to determine the coverage of prominent projections. This method is particularly useful for small structures.

To determine if all parts of a flat roofed structure such as vents, pipes, cabling, or raised extensions are protected, use the method illustrated in Figure 1-21 to calculate the zone protected by two vertical terminals. This method can also be used to determine the coverage provided by vertical masts or horizontal wires. In Figure 1-21 point P represents the point of discrimination. That is, the point of departure of the final stepped leader of the downward traveling stroke (see Volume I, Section 3.2). To determine if the air terminals are

actually the nearest objects to point P, use P as a center and swing an arc of radius X through the tips of the terminals. Let the value of this radius X be 100 feet, since 100 feet represents the shortest length usually associated with a stepped leader (see Volume I, Section 3.2). Because of the large differences between the height of typical terminals and the striking distance X, graphical determination of the protected zone will usually be awkward. For greater accuracy, calculate the critical distances through the use of the following equation:

$$G = H - X + \sqrt{X^2 - \left(\frac{S}{2}\right)^2} \qquad (1\text{-}2)$$

which is valid for $S \leq 2X$. In this equation, G is the minimum height between the terminals that is completely protected; H is the height of the terminals, S is the spacing between terminals, and X is the radius of the arc.

Sample calculation. To illustrate the application of this method, suppose it is necessary to determine the minimum spacing between 3-foot air terminals that will guarantee that all parts of a flat roof remain in the protected zone. In other words, what value of S corresponds to G = 0 in Equation 1-2? To perform the calculation, first set G = 0:

$$0 = H - X + \sqrt{X^2 - \left(\frac{S}{2}\right)^2}$$

Rearranging to be

$$X - H = \sqrt{X^2 - \left(\frac{S}{2}\right)^2}$$

and squaring both sides produces

$$X^2 - 2HX + H^2 = X^2 - \left(\frac{S}{2}\right)^2$$

Eliminating X^2 and changing signs on both sides of the equation yields

$$\left(\frac{S}{2}\right)^2 = 2HX - H^2$$

or

$$\frac{S^2}{4} = H(2X - H)$$

$$S = 2\sqrt{H(2X - H)}$$

Substituting H = 3 feet and X = 100 feet in this last equation shows that S must equal 48.6 feet or less to guarantee that all parts of the roof remain within the protected zone.

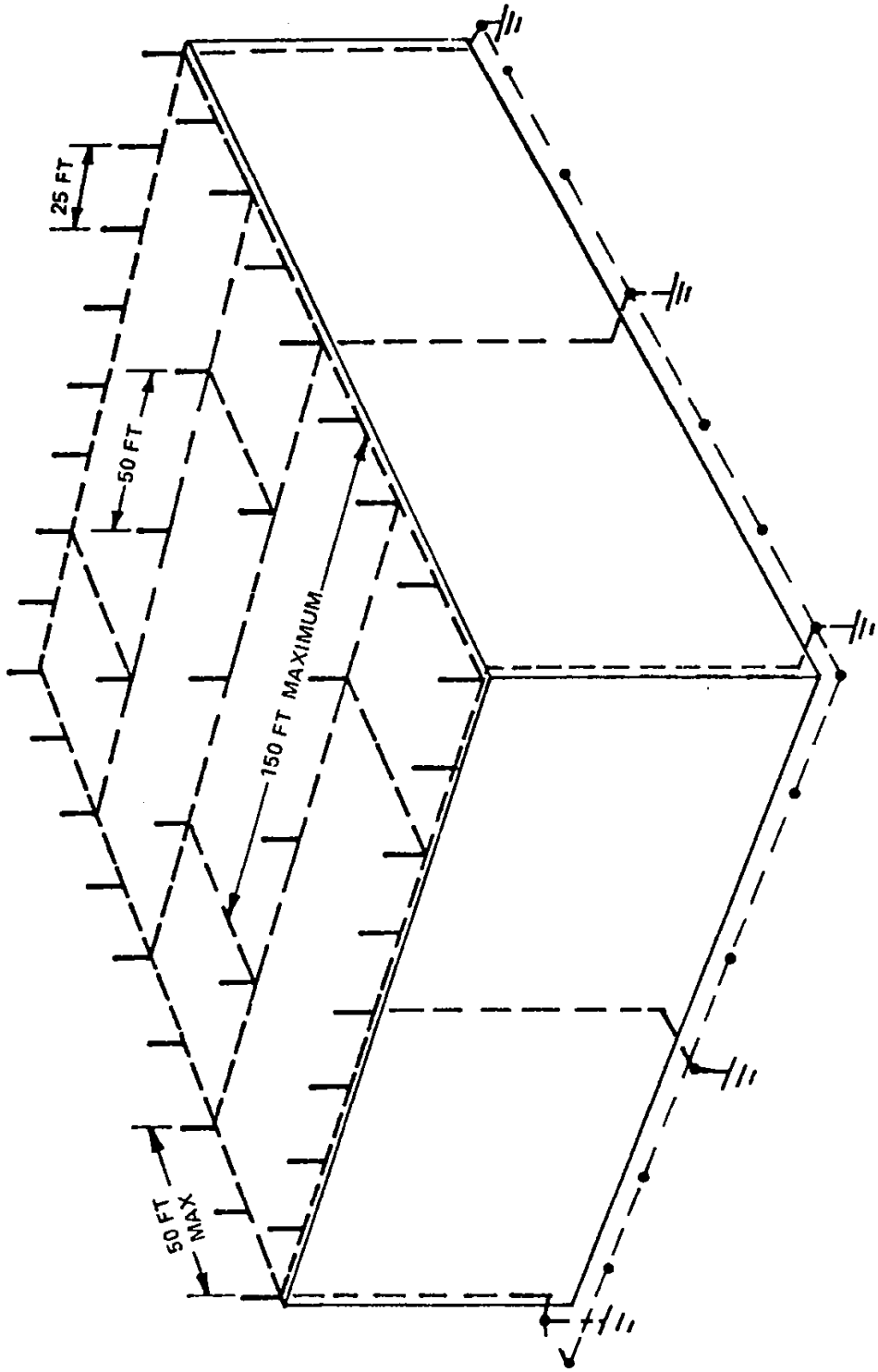

Figure 1-18. Air Terminal Placement on Flat-Roofed Structures

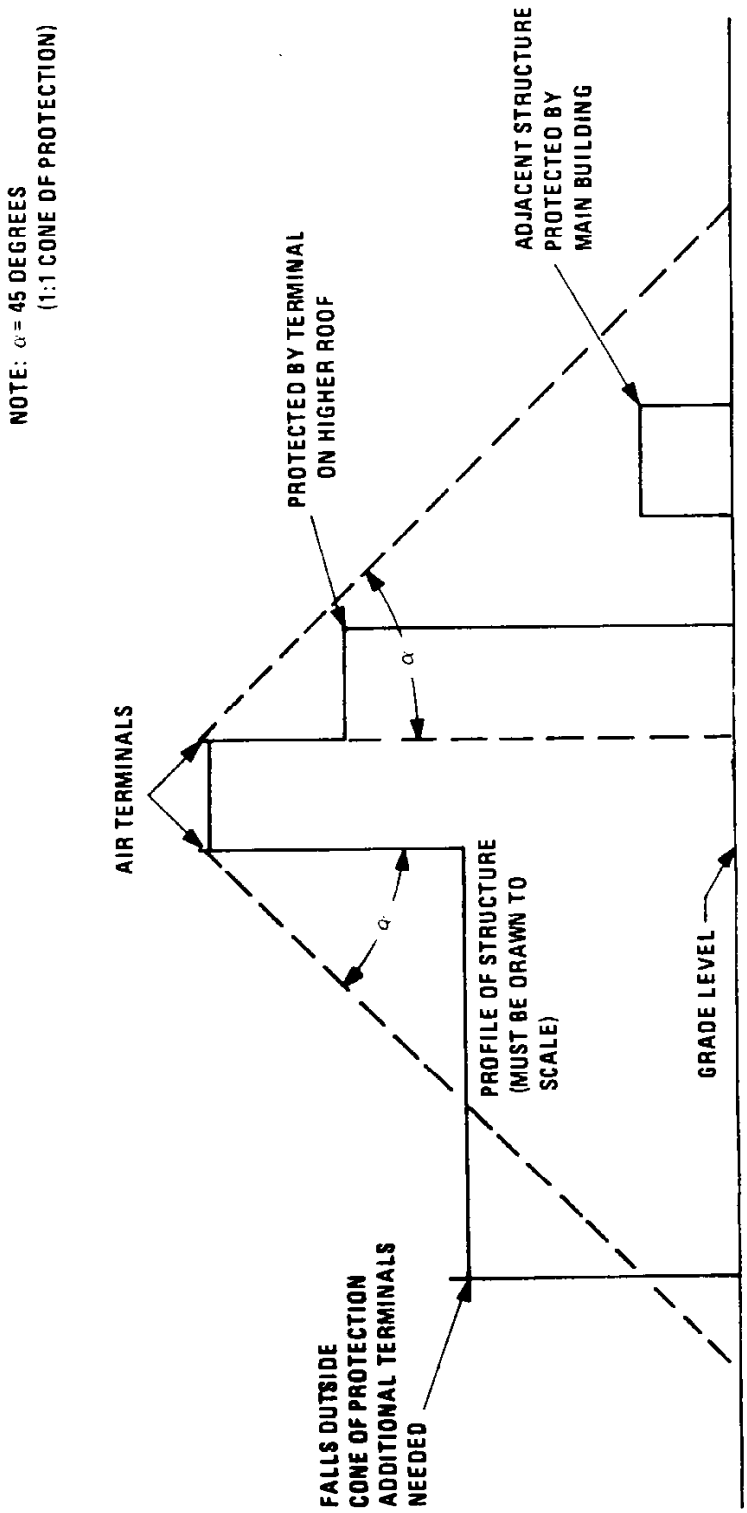

Figure 1-19. Graphical Method for Determining Need for Additional Air Terminals

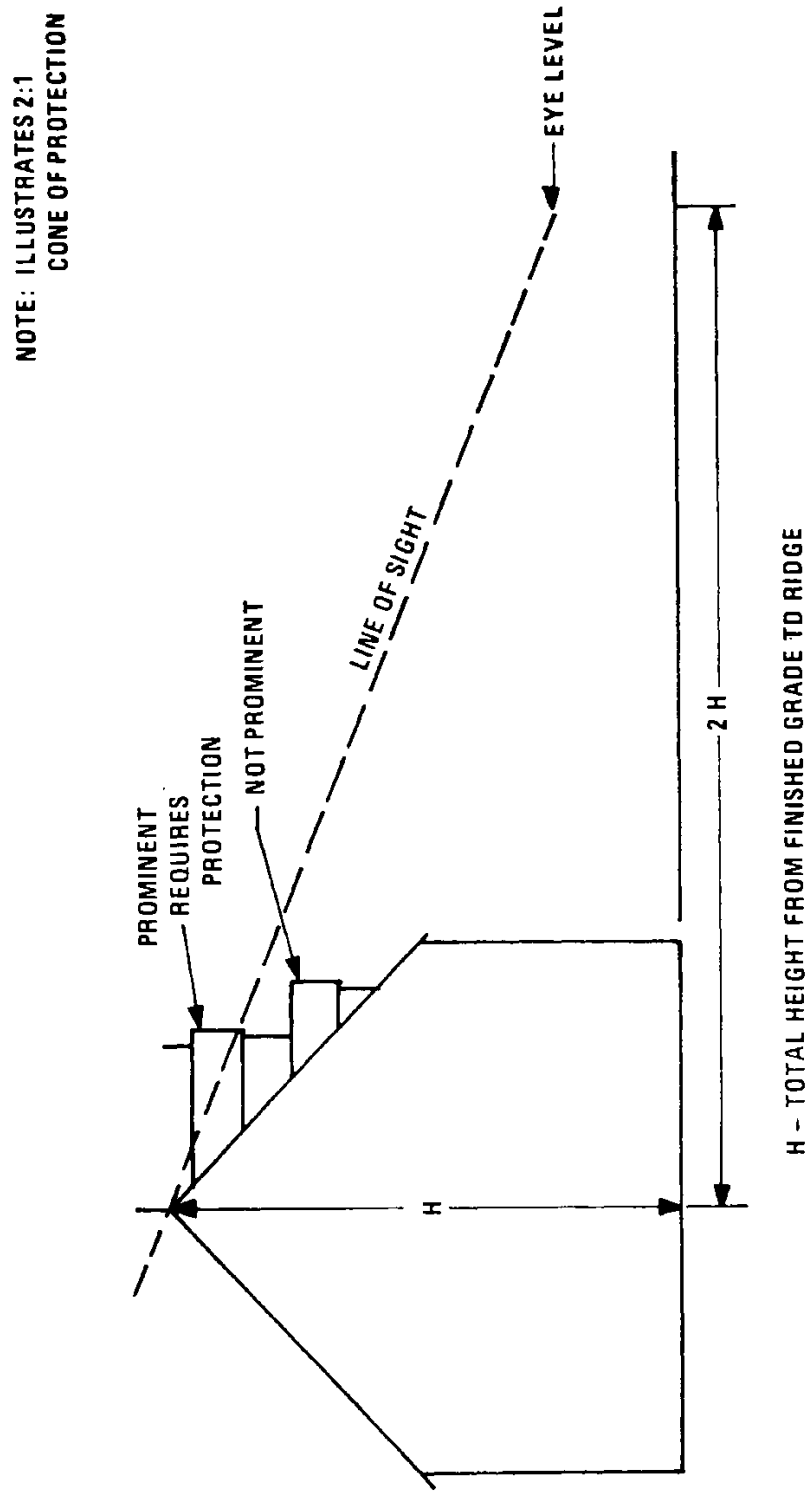

Figure 1-20. Field Expedient Technique for Determining the Protection of Prominent Dormers

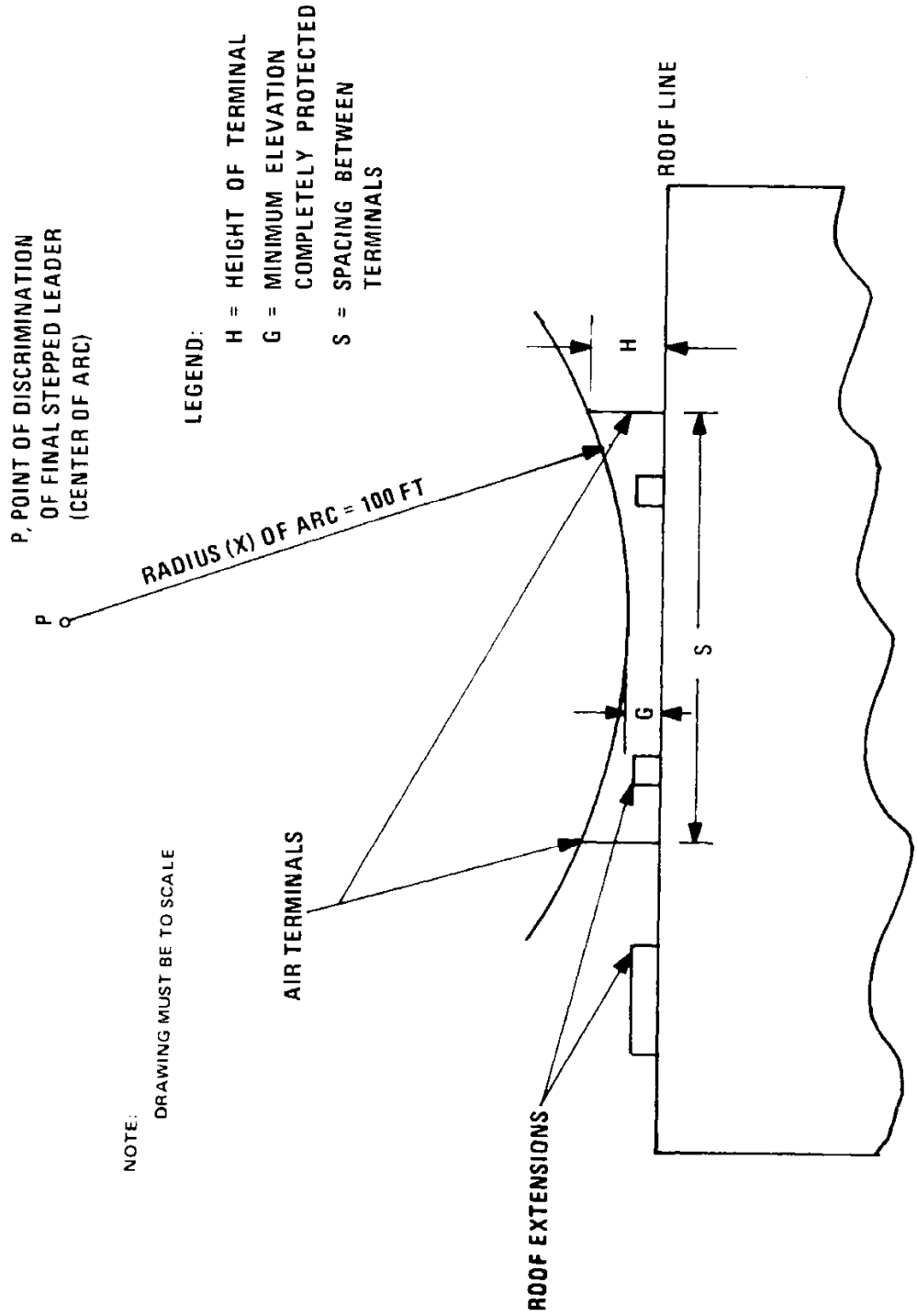

Figure 1-21. Illustration of Method for Determining the Protection of Flat Surfaces as Provided by Air Terminals (1-4)

1.3.2.2 Grounding Conductors. Provide each air terminal with a two-way path to earth through the installation of roof and down conductors conforming to Table 1-2 for structures not greater than 75 feet in height and conforming to Table 1-3 for structures greater than 75 feet in height. An exception is that air terminals located on prominent dormers extending less than 16 feet from the main structure need have only one connecting path from the terminal to the main down conductor as shown in Figure 1-22. Additional information on copper wires is contained in Table 1-4.

1.3.2.2.1 Roof Conductors.

a. Roof conductors should be routed along ridges of gable, gambrel, and hip roofs, and around the perimeter of flat and gently sloping roofs.

b. Roof grounding conductors routed throughout decks, flat surfaces, and flat roofs should be interconnected to form closed loops to insure that all air terminals have at least two paths to earth.

c. Ridge conductors may drop from a higher to a lower roof level without installing an extra down lead at the point of intersection of the two roof levels if there are not more than two air terminals on the lower roof level.

d. On roofs that exceed 50 feet in width, additional conductors are to be provided to interconnect the air terminals required to protect large flat areas (see Figure 1-18). One additional conductor for each 50 feet in width is necessary. For example, on roofs 50 to 100 feet wide, add one additional run; on roofs 100 to 150 feet wide, add two additional runs; etc. These additional runs must be interconnected together and to the perimeter conductor at 150-foot intervals with cross conductors as illustrated in Figure 1-18.

Table 1-2

Minimum Requirements for Roof and Down Conductors on Structures Not Greater than 75 Feet (23 Meters) in Height (l-3)

Type of Conductor		Material	
		Copper	Aluminum
Cable	Strand Size	14 AWG	12 AWG
	Weight per 1000 feet*	187-1/2 pounds	95 pounds
	Area*	59,500 Cir roils	98,500 Cir roils
	DC Resistance	0.176 ohms/1000 ft	0.176 ohms/1000 ft
Solid Strip	Thickness	14 AWG	12 AWG
	Width	1 inch**	1 inch**
	DC Resistance	0.176 ohms/1000 ft	0.176 ohms/1000 ft
Solid Rod	Weight Per 1000 feet	186-1/2 pounds	95 pounds
	DC Resistance	0.176 ohms/1000 ft	0.176 ohms/1000 ft
Tubular Rod	Weight per 1000 feet	187-1/2 pounds	95 pounds
	Wall Thickness	0.032 inch	0.064 inch
	DC Resistance	0.176 ohms/1000 ft	0.176 ohms/1000 ft

* Acceptable substitutes are No. 2 AWG copper cables and 1/0 AWG aluminum cables.

**This is the minimum width for a strip void of perforations. If perforated, the width shall be increased equal to the diameter of the perforations.

Table 1-3

Minimum Requirements for Roof and Down Conductors on Structures Greater than 75 Feet (23 Meters) in Height (1-3)

Material	Minimum Wire Strand Size*	Weight Per Foot	Weight Per 1000 Feet	DC Resistance Per 1000 Feet
	AWG	Ounces	Pounds	Ohms
Copper	14	6	375	0.088
Aluminum	12	3	190	0.088

*Equivalent standard AWG cable: Copper - 2/0, Aluminum - 4/0

Table 1-4. Solid Copper Wire — Weight, Breaking Strength, DC Resistance
(Based on ASTM Specifications B1-56, B2-52, and B3-63)

		Area		Weight		Hard		Medium		Soft	
Size, AWG	Diameter, in.	Cir mils	Sq in.	Lb per 1,000 ft	Lb per mile	Breaking strength, minimum lb	DC resistance at 20° C (68° F) maximum, ohms per 1,000 ft	Breaking strength, minimum lb	DC resistance at 20° C (68° F) maximum, ohms per 1,000 ft	Breaking strength, maximum lb	DC resistance at 20° C (68° F) maximum, ohms per 1,000 ft
4/0	0.4600	211,600	0.1662	640.5	3382	8143	0.05045	6980	0.05019	5983	0.04901
3/0	0.4096	167,800	0.1318	507.8	2681	6720	0.06362	5666	0.06330	4744	0.06182
2/0	0.3648	133,100	0.1045	402.8	2127	5519	0.08021	4599	0.07980	3763	0.07793
1/0	0.3249	105,600	0.08291	319.5	1687	4518	0.1022	3731	0.1016	2985	0.09825
1	0.2893	83,690	0.06573	253.3	1338	3688	0.1289	3024	0.1282	2432	0.1239
2	0.2576	66,360	0.05212	200.9	1061	3002	0.1625	2450	0.1617	1928	0.1563
3	0.2294	52,620	0.04133	159.3	841.1	2439	0.2050	1984	0.2039	1529	0.1971
4	0.2043	41,740	0.03278	126.3	667.1	1970	0.2584	1584	0.2571	1213	0.2485
5	0.1819	33,090	0.02599	100.2	528.8	1590	0.3260	1265	0.3243	961.5	0.3135
6	0.1620	26,240	0.02061	79.44	419.4	1280	0.4110	1010	0.4088	762.6	0.3952
7	0.1443	20,820	0.01635	63.03	332.8	1030	0.5180	806.7	0.5153	605.1	0.4981
8	0.1285	16,510	0.01297	49.98	263.9	826.1	0.6532	644.0	0.6498	479.8	0.6281
9	0.1144	13,090	0.01028	39.61	209.2	660.9	0.8241	513.9	0.8199	380.3	0.7925
10	0.1019	10,380	0.008155	31.43	166.0	529.3	1.039	410.5	1.033	314.0	0.9988
11	0.0907	8,230	0.00646	24.9	131	423	1.31	327	1.30	249	1.26

Table 1-4. Solid Copper Wire — Weight, Breaking Strength, DC Resistance
(Based on ASTM Specifications B1-56, B2-52, and B3-63) (Continued)

		Area		Weight		Hard		Medium		Soft	
Size, AWG	Diameter, in.	Cir mils	Sq in.	Lb per 1,000 ft	Lb per mile	Breaking strength, minimum lb	DC resistance at 20° C (68° F) maximum, ohms per 1,000 ft	Breaking strength, minimum lb	DC resistance at 20° C (68° F) maximum, ohms per 1,000 ft	Breaking strength, maximum lb	DC resistance at 20° C (68° F) maximum, ohms per 1,000 ft
12	0.0808	6,530	0.00513	19.8	104	337	1.65	262	1.64	197	1.59
13	0.0720	5,180	0.00407	15.7	82.9	268	2.08	209	2.07	157	2.00
14	0.0641	4,110	0.00323	12.4	65.7	214	2.63	167	2.61	124	2.52
15	0.0571	3,260	0.00256	9.87	52.1	170	3.31	133	3.29	98.6	3.18
16	0.0508	2,580	0.00203	7.81	41.2	135	4.18	106	4.16	78.0	4.02
17	0.0453	2,050	0.00161	6.21	32.8	108	5.26	84.9	5.23	62.1	5.05
18	0.0403	1,620	0.00128	4.92	26.0	85.5	6.64	67.6	6.61	49.1	6.39
19	0.0359	1,290	0.00101	3.90	20.6	68.0	8.37	54.0	8.33	39.0	8.05
20	0.0320	1,020	0.000804	3.10	16.4	54.2	10.5	43.2	10.5	31.0	10.1
21	0.0285	812	0.000638	2.46	13.0	43.2	13.3	34.4	13.2	24.6	12.8
22	0.0253	640	0.000503	1.94	10.2	34.1	16.9	27.3	16.8	19.4	16.2
23	0.0226	511	0.000401	1.55	8.16	27.3	21.1	21.9	21.0	15.4	20.3
24	0.0201	404	0.000317	1.22	6.46	21.7	26.7	17.5	26.6	12.7	25.7
25	0.0179	320	0.000252	0.970	5.12	17.3	33.7	13.9	33.5	10.1	32.4
26	0.0159	253	0.000199	0.765	4.04	13.7	42.7	11.1	42.4	7.94	41.0

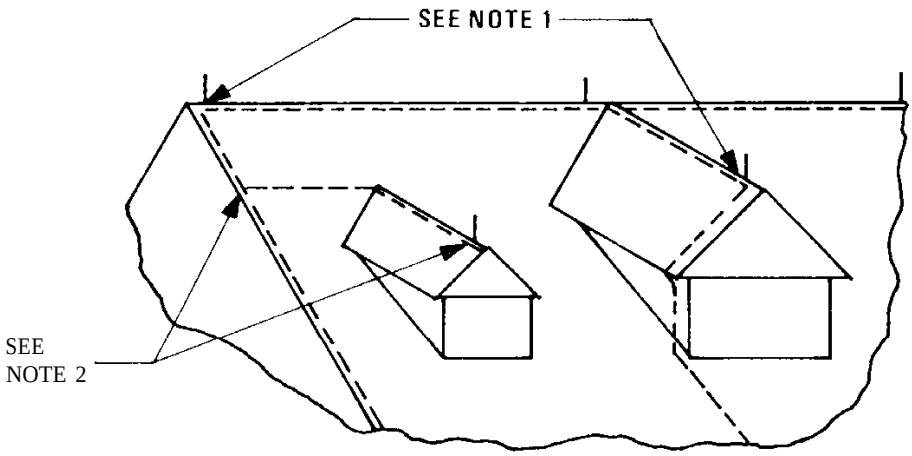

NOTES:

1 – DEAD ENDS ARE NOT ACCEPTABLE ON MAIN RIDGES OR ON RIDGES OF DORMERS OR SIDE WINGS AS HIGH OR HIGHER THAN THE MAIN RIDGE,

2- TOTAL CONDUCTOR LENGTH NOT TO EXCEED 16 FEET.

Figure 1-22. Criteria for Dead End Coverage

e. Maintain a horizontal or downward course with roof conductors. Provide "U" or "V" (up and down) pockets with a down conductor from the base of the pocket (see Figure 1-23(a)) to ground or to a convenient lead of the main down conductor.

f. Route conductors through or around obstructions which lie in a horizontal plane with the conductor (Figure 1-23(b) and (c)). Bends in the conductor should not include an angle of less than 90 degrees and should maintain a radius of 8 inches or greeter (Figure 1-23(d)). In particular, re-entrant loops should be avoided (1-5). When routing around obstructions, wide gradual bends are preferred. Other recommended practices are illustrated in Figures 1-23(e) thru (h).

g. Securely attach the conductors directly to the ridge roll or roof with UL-approved fasteners every 3 feet.

h. Conductors may be coursed through air up to 0.9 meters (3 feet) without support. With an acceptable support such as a 1.9 cm (3/4-inch) copper-clad ground rod or its equivalent, securely fastened at each end, a conductor may be coursed up to 1.8 meters (6 feet) through air.

1.3.2.2.2 Down Conductors.

a. Course down conductors over the extreme outer portions of the structure and separate them as far apart as possible. Preferred locations are at diagonally opposite corners on square or rectangular structures and symmetrically distributed around cylindrical structures.

b. Locate down conductors as close as practical to air terminals and to the most convenient places for attaching the conductors to the earth electrode subsystem of the structure. The down conductors should be equally and symmetrically spaced about the perimeter of the structure.

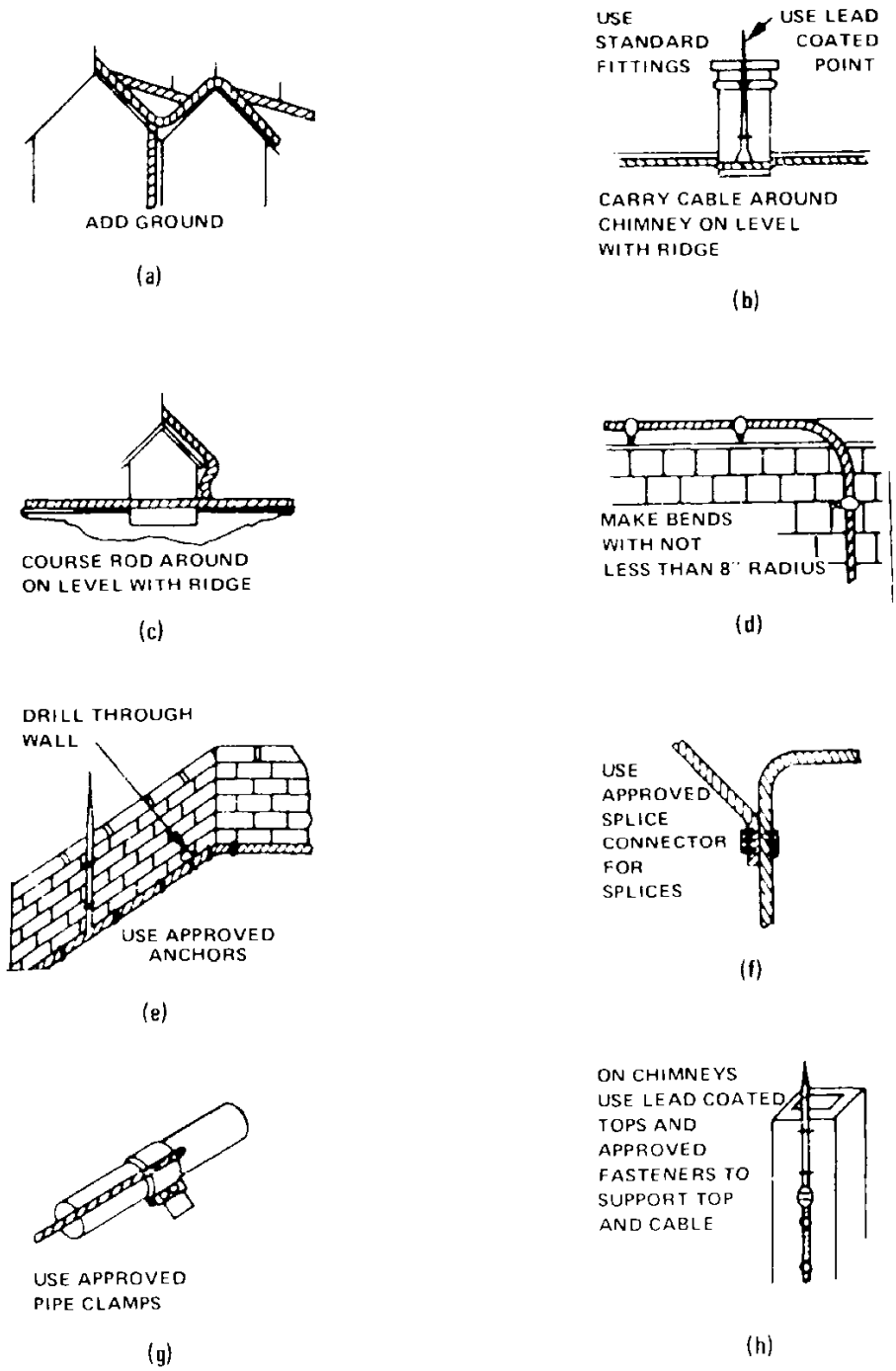

Figure 1-23. Recommended Construction Practices for Integral Lightning Protection Systems

c. At least two down conductors are required on all structures except on slender objects like flag poles, antenna masts (not substantial towers), light poles, and the like.

d. Provide one additional down conductor for each additional 30 meters (100 feet) or fraction thereof on structures having a perimeter exceeding 75 meters (250 feet). On structures having flat or gently sloping roofs and on irregular-shaped structures, the number of down conductors should be such that the length of the average roof conductor joining them does not exceed 30 meters (100 feet). On structures higher than 18 meters (60 feet) where down conductors are required, install at least one additional down conductor for each 18 meters (60 feet) of height or fraction thereof; however, the spacing between down conductors need not be less than 15 meters (50 feet).

e. Down conductors are to be provided or located appropriately to avoid dead ends in excess of 4.8 meters (16 feet) in length. See Figure 1-22, Note 1.

f. Maintain down conductors in a downward course with routing around or through any obstruction which may lie in the path. Sharp bends or turns are to be avoided with necessary turns limited to not less than 90 degrees and not less than 20 cm (8 inches) in radius.

g. Where large re-entrant loops (i.e., those with greater than 90-degree turns) cannot be avoided, e.g., around cornices or over parapets, the conductor should be routed to ensure that the open side of the loop is greater than one-eighth the length of the remaining sides of the loop. It is advised, however, to course the conductor through holes or troughs through the obstacles and avoid the loop completely (as shown in Figure 1-23(e)) whenever possible.

h. On structures with overhangs such as antenna towers with extended platforms or buildings utilizing cantilevered construction, run the down conductors vertically through the interior of the structure (l-5). Internally routed conductors must be enclosed in nonmetallic, noncombustible ducts.

i. Substantial metal structural elements of buildings may be substituted for regular lightning conductors where, inherently or by suitable electrical bonding, they are electrically continuous from the air terminal to the earth electrode connection. The structural elements must have a conducting cross-sectional area, including that in joints, at least twice that of the lightning conductor that would otherwise be used. There need be no difference whether such conductors are on the interior or exterior of the structure when used for down conductors. Steel frame buildings encased in bricks or other masonry products must have external air terminals and roof conductors installed and bonded directly to the structural members to keep the lightning discharge from having to penetrate the masonry shell to reach the frame members.

1.3.2.3 Fasteners.

a. Securely attach air terminals and roof and down conductors to the building or other object upon which they are placed.

b. Fasteners (including nails, screws, or other means by which they are attached) should be substantial in construction, not subject to breakage, and should be of the same material as the conductor or of a material that will preclude serious tendency towards electrolytic corrosion in the presence of moisture because of contact between the different metals. (For further information on corrosion, see Volume I, Section 7.8.)

c. Keep all hardware, component parts, and joints that are not welded or brazed and that require inspection for maintenance and repair readily accessible.

d. Any special fixtures required for access should be permanently attached to prevent loss. However, appropriate locks or other devices essential to safety, security, and physical protection of the hardware or of the area in which it is located may be used.

1.3.3 Separately Mounted Protection Systems.

1.3.3.1 Mast Type.

a. No part of the structure being protected should extend outside the protected zone as calculated by the procedure illustrated by Figure 1-19 (a conservative estimate for two masts can be made with the aid of Figure 1-24).

b. Where it is impractical to provide a common mast to provide protection for an entire structure, additional masts should be provided.

c. If the pole is made of a nonconducting material, provide an air terminal extending not less than 0.6 meters (2 feet) nor more than 0.9 meters (3 feet) above the top of the poIe.

d. Connect the base of the mast (if metal) or the down conductors to the earth electrode subsystem of the protected structure with at least a No. 6 AWG copper conductor or equivalent.

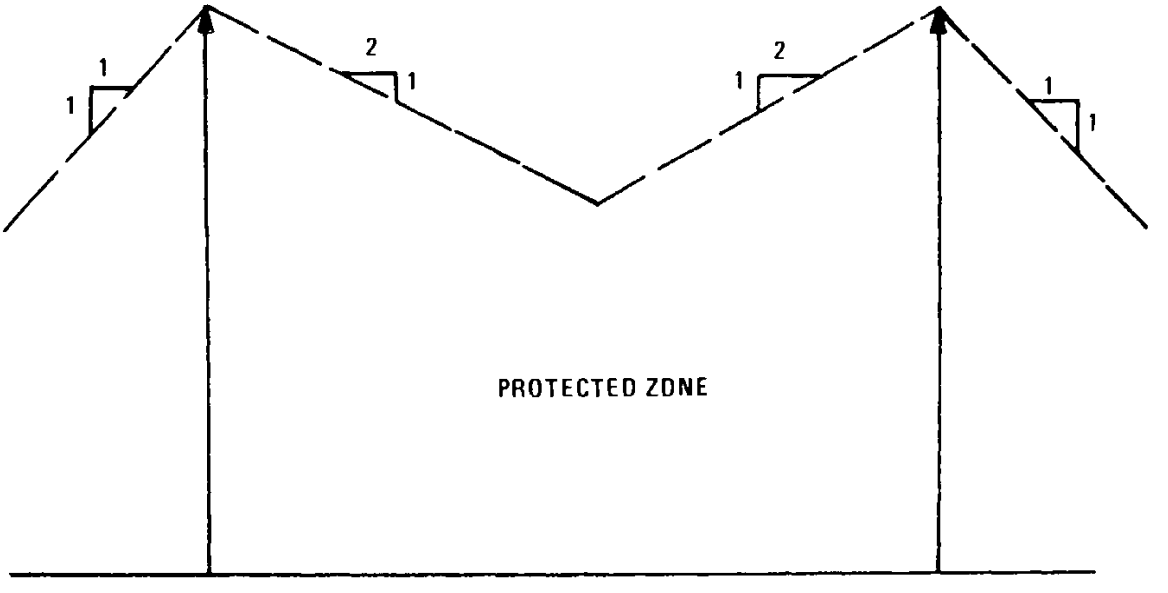

Figure 1-24. The Protected Zone Provided by Two Vertical Masts

1.3.3.2 Overhead Ground Wire Type.

a. If the poles are of a nonconducting material, an air terminal shall be securely mounted on the top of each pole, extending not less than 0.45 meters (1.5 feet) above the top of the pole. Down conductors are run down the side of the pole or the guy wire may be employed as the conductor as shown in Figure 1-25. If the guy wire is used, it shall meet the requirements of paragraph 1.3.2.2 and both this wire and the overhead ground wire are dead-ended at the pole. The overhead ground wire and the guy wire shall be interconnected with a separate cable. Down conductors and guy wires used as down conductors are to be connected to the earth electrode subsystem of the structure being protected. Guy wires not located near existing earth electrode subsystems shall be grounded either to their respective ground anchor (by use of an interconnecting cable) or to a separate ground rod.

b. The height of the poles should be sufficient to provide a clearance of not less than 1.8 meters (6 feet) between the overhead ground wire and the highest projection on the building. When the overhead ground wire system is used to protect stacks or vents which emit explosive dusts, vapors, or gases under forced draft, the cable is installed so that it has a clearance of at least 4.5 meters (15 feet) above the object receiving protection.

c. With either the mast type or the overhead ground wire type of system, the pole is placed at a distance from the structure that is at least one-third the height of the structure, but in no instance less than 1.8 meters (6 feet). Figure 1-25 refers.

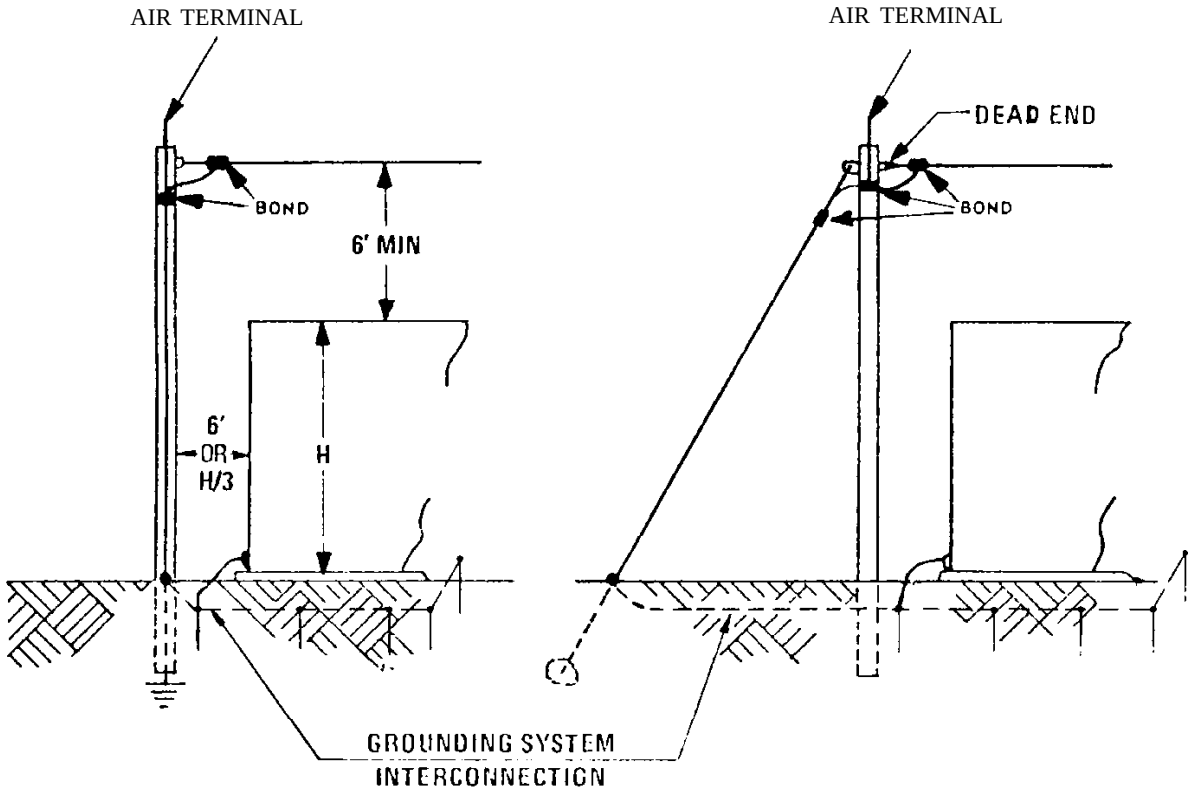

Figure 1-25. Overhead Ground Wire Lightning Protection System

1.3.3.3 Waveguide Installation and Grounding. Waveguide between the antenna and the associated transmit/receive equipment should be grounded in the following manner.

a. Each waveguide shall be bonded to the down conductor of the air terminal at the top near the antenna and also at the bottom near the vertical to horizontal transition point. The waveguide shall also be bonded to the antenna tower at the same points as well as at an intermediate point if the tower exceeds 60 meters (200 feet).

b. All waveguide support structures shall be bonded to the tower. The waveguides and supporting structure shall be bonded together at the waveguide entry plate and connected to the earth electrode subsystem.

c. All waveguides, conduit or piping entering a building shall be bonded to the waveguide entry plate, then to the earth electrode subsystem (see Figures 1-26 thru 1-31). For waveguide penetrations of a shielded enclosure or entry plate see Volume 1, Section 10.4.2.4.

d. Rigid waveguides within 1.8 meters (6 feet) of each other should be bonded together through the entry plate or by means of a crimp type lug fastened under the waveguide flange bolts and No. 6 AWG wire. The bond shall be extended to the bus at the waveguide entry point and connected to the earth electrode subsystem.

e. Determine location of ground strap position as shown in Figure 1-28A and remove waveguide jacket. The ground strap is made from a piece of waveguide as detailed in Figures 1-29 and 1-30. Clean mating surfaces (waveguide and strap) with solvent or cleaning fluid.

f. Wrap the strap with No. 14 AWG copper wire (for 8 GHz waveguide as shown Figure I-28A). For 4 GHz waveguide, use No. 10 AWG solid copper wire. Use adjustable stainless steel clamps as required to secure the strap. Tighten screw until the clamp grips firmly. Excessive tightening could damage the waveguide and impair the electrical characteristics. Weatherproof with Scotch Guard or equivalent and tape.

g. An alternate method of securing the strap to the waveguide is to use wrap-around heat shrink to cover the bond and to maintain weatherproofing. Solder one end of a solid copper wire (#10 for 4 GHz and #14 for 8 GHz waveguide) to one end of corrugated portion of the ground strap. Align the corrugated section of the ground strap with the exposed section of the waveguide (see Figure 1-28 B). Tightly wrap the wire around the ground strap and waveguide and solder the end of the wire to the ground strap for securing purposes. Apply the wrap-around heat shrink around the waveguide and heat according to the manufacturer's instructions.

h. Remove all sharp and rough edges on ground strap.

i. An alternate method for grounding waveguide is also shown on Figure 1-26.

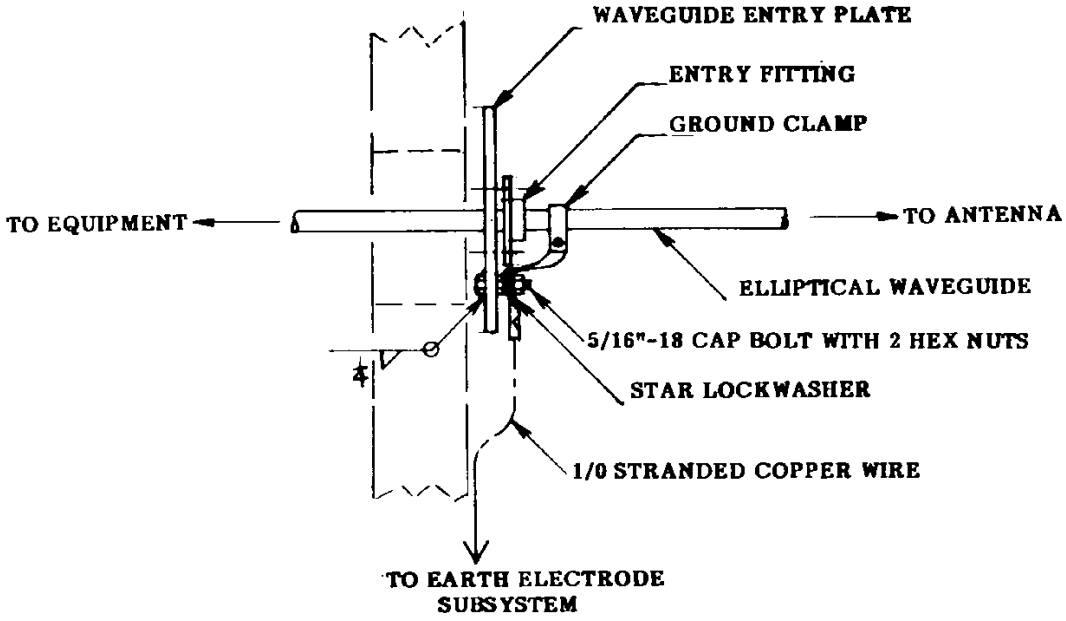

NOTE: To satisfy HEMP requirements, peripherally bond waveguide to waveguide entry plate.

Figure 1-26. Waveguide Entry Plate Detail

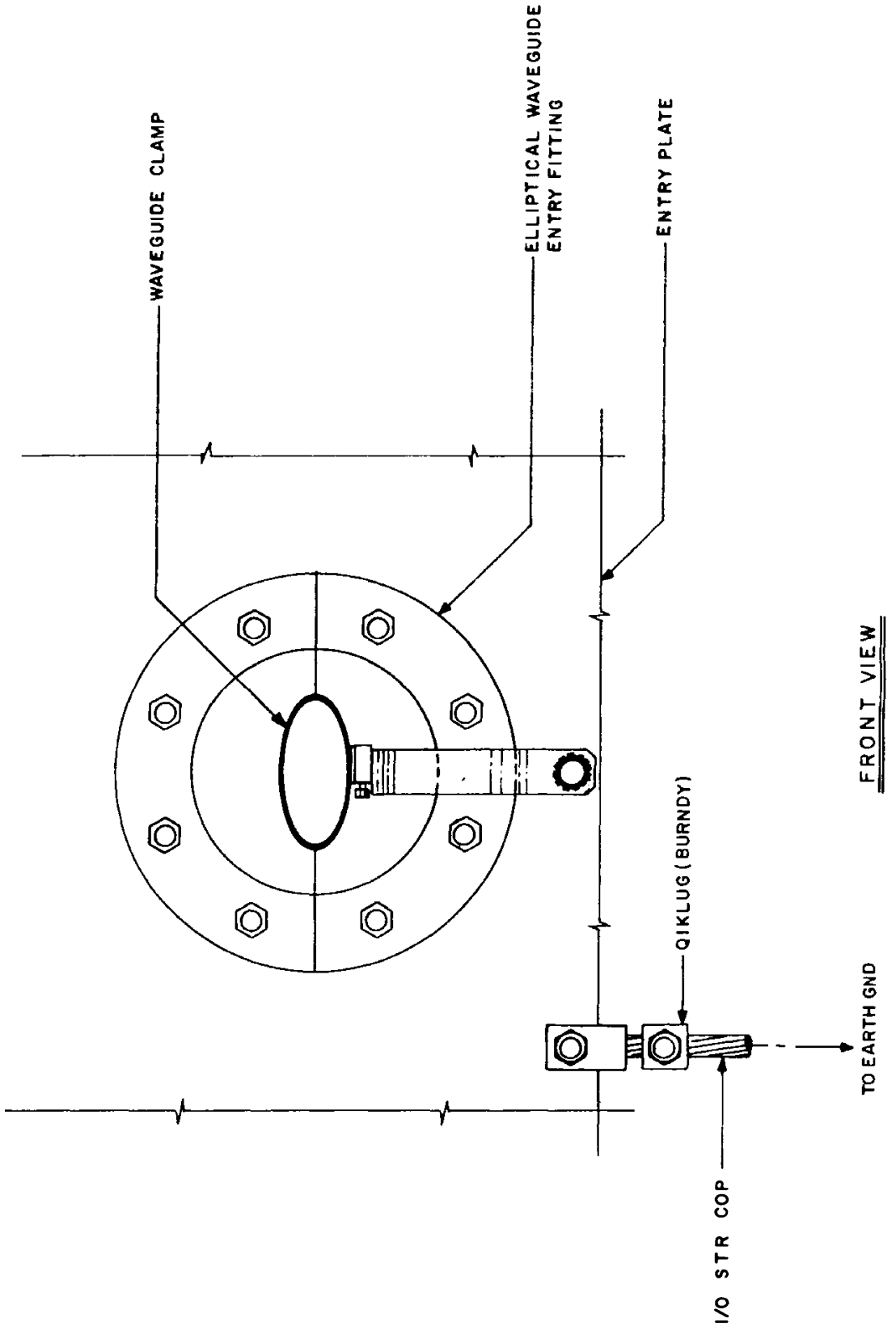

Figure 1-27. Grounding Detail for Elliptical Waveguide

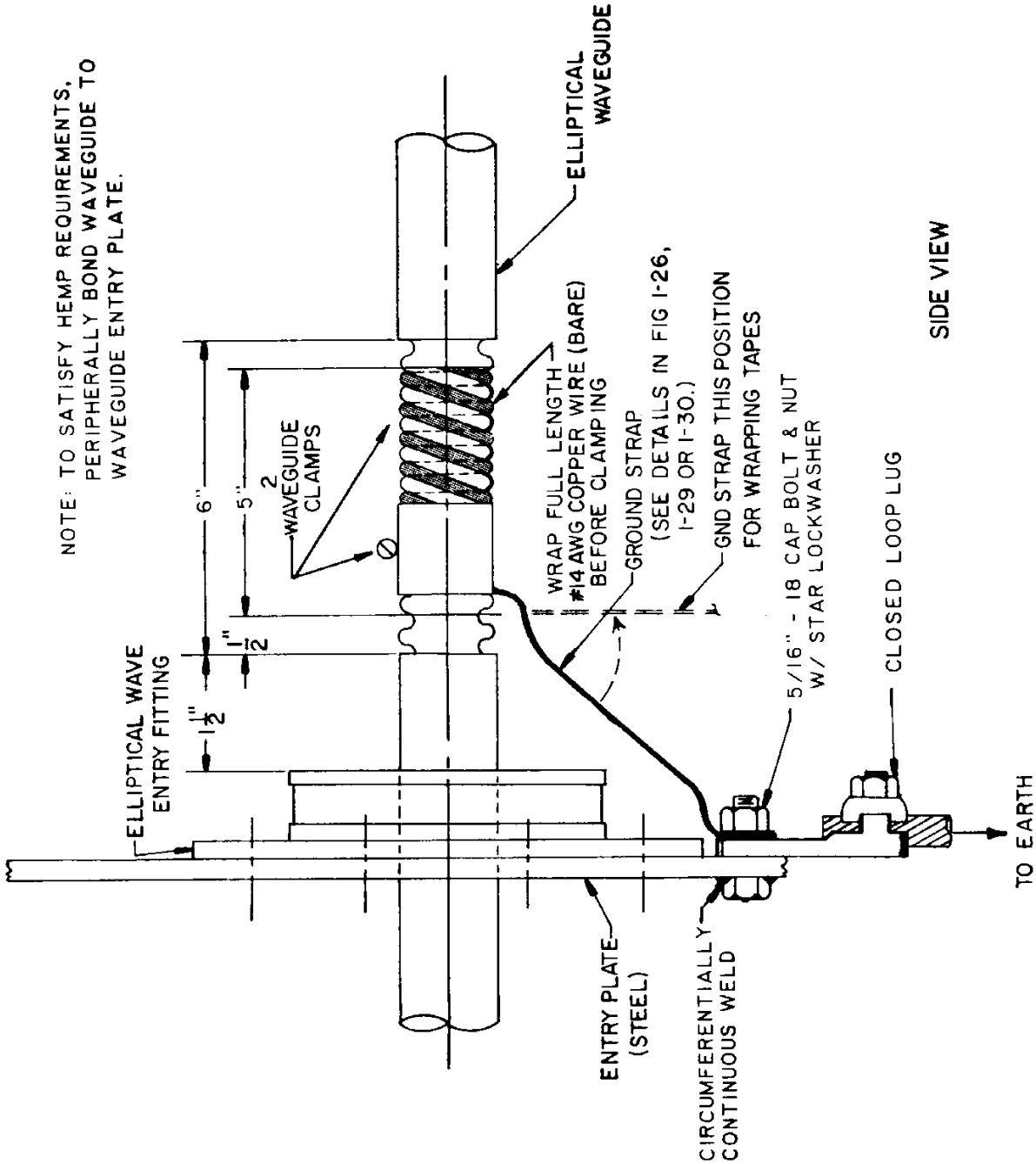

Figure 1-28A. Grounding Details for Elliptical Waveguide

Figure 1-28B. Heat Shrink Grounding

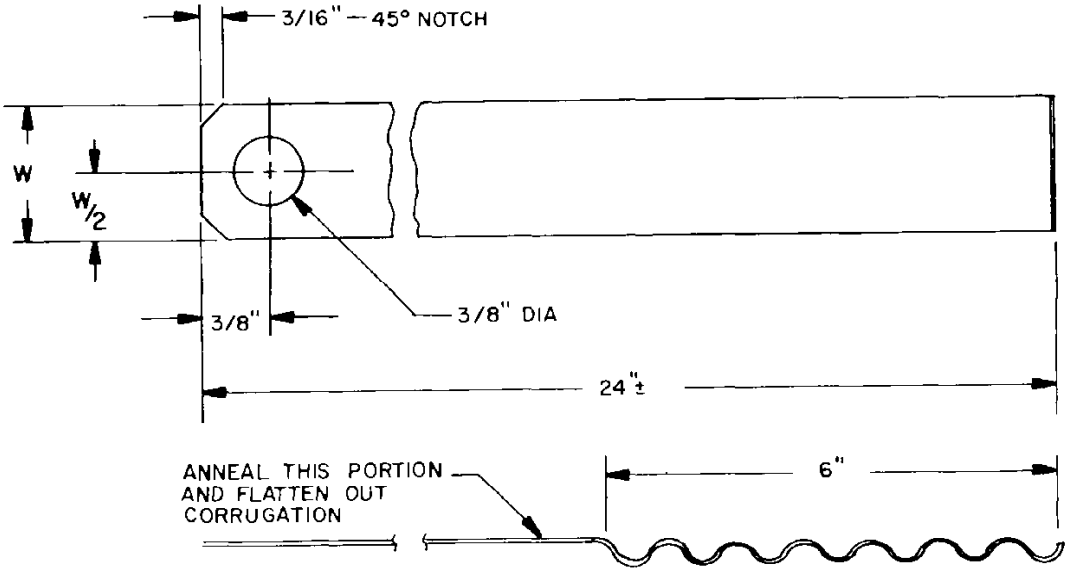

Figure 1-29. Ground Strap Detail for Elliptical Waveguide

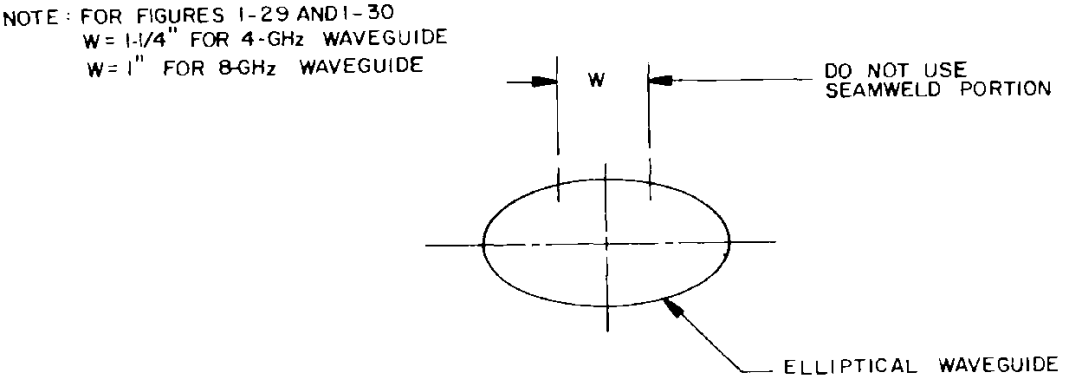

Figure 1-30. Strap Cutting Detail for Elliptical Waveguide

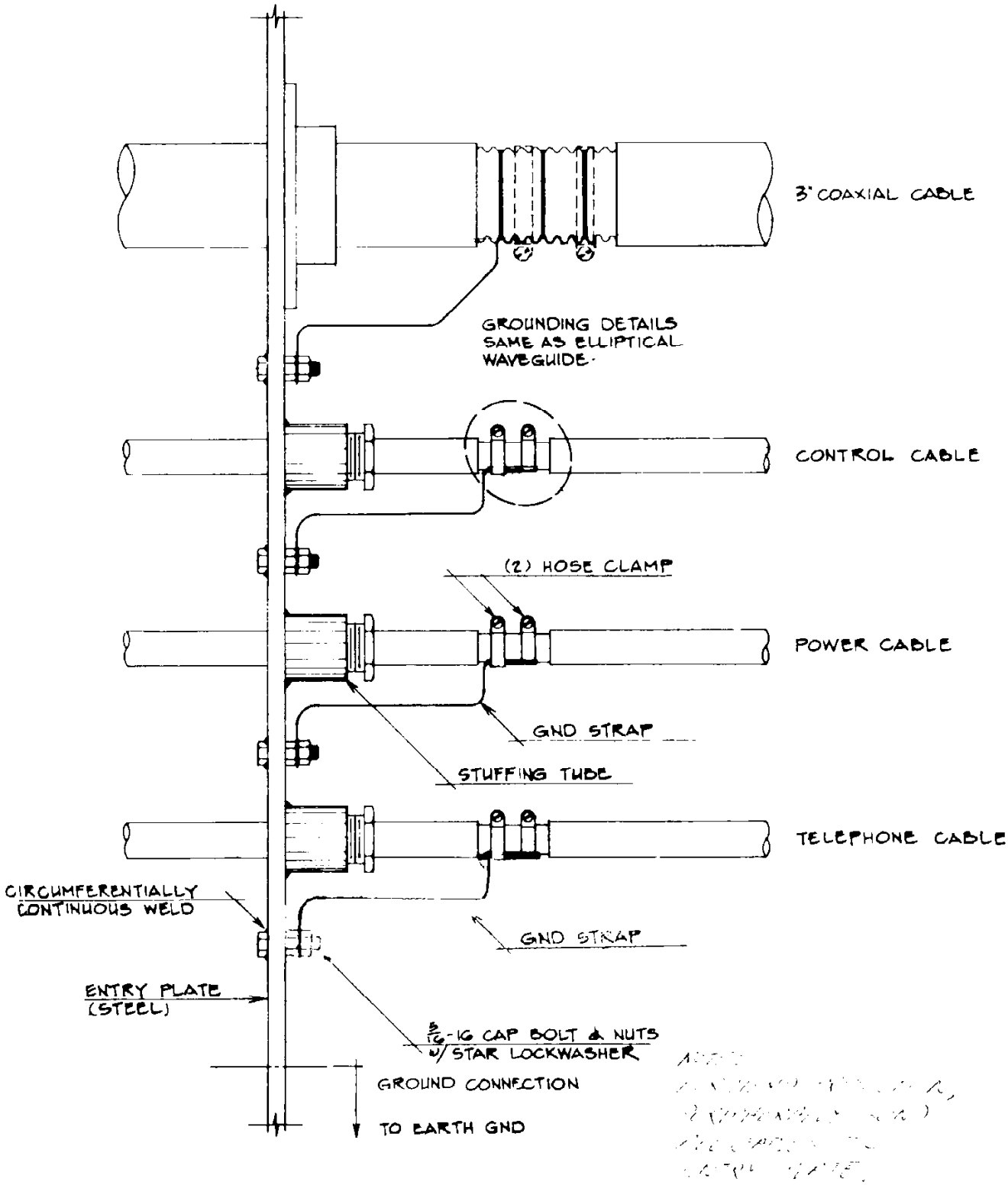

Figure 1-31. Typical Communication Cable Entry Installation

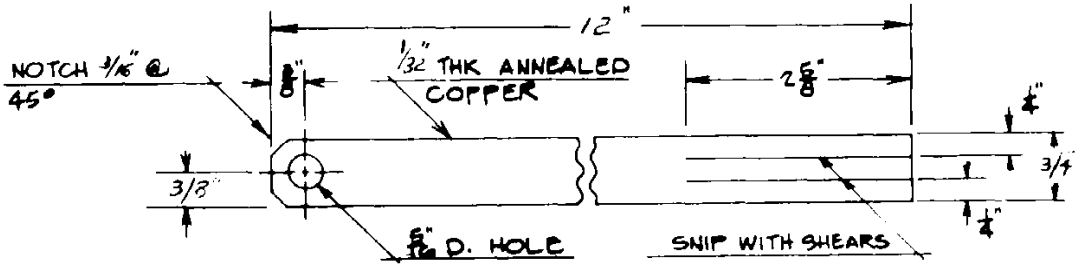

Figure 1-32. Ground Strap Detail

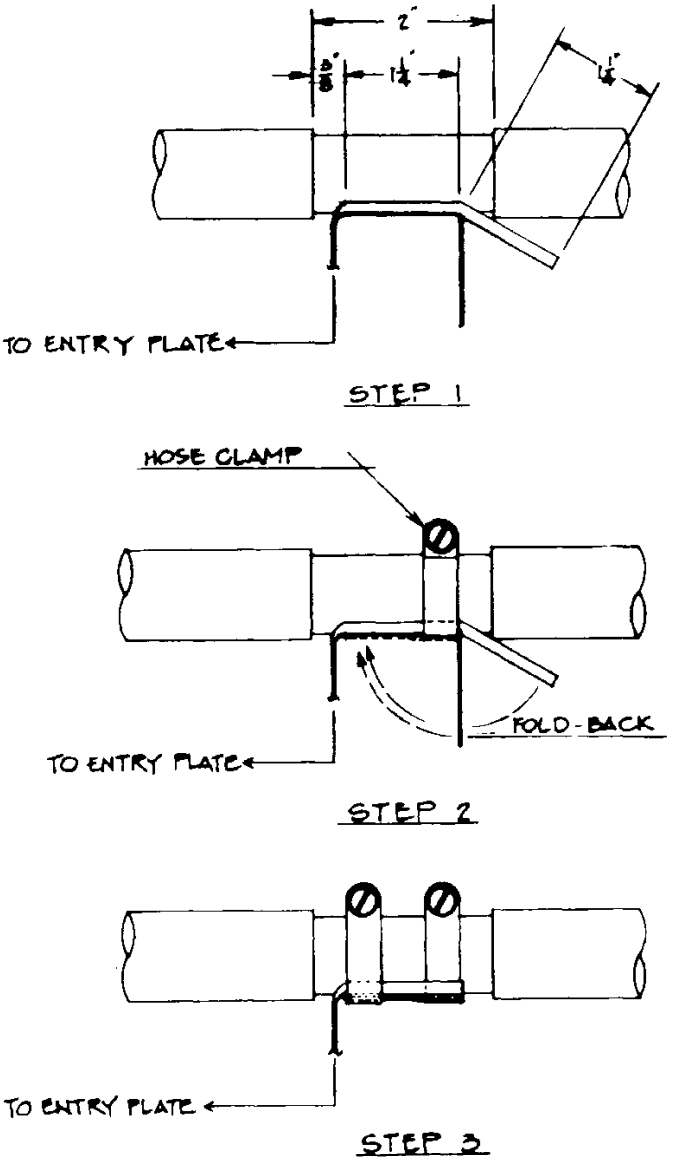

Figure 1-33. Grounding Steps for Cables

1.3.3.4 Cable Installation and Grounding. Cables which enter a facility shall be installed generally using Figure 1-31 as a guideline. The final design shall rest with the designer; however, the following steps apply in general. (Figures 1-32 and 1-33)

a. Remove outer cable jacket very carefully so as not to damage the cable shield (see Figure 1-33, step 1).

b. Preform ground strap to fit cable diameter and secure the first hose clamp as outlined in the next step (see Figure 1-33, step 2)

c. Fold back ground strap (about 3.2 cm (1-1/41") long) over hose clamp and cable for a snug fit. Secure second hose clamp around the folded strips of the ground strap described in the next step (see Figure 1-33, step 3).

d. For small diameter cable use a No. 6 AWG 7-strand copper wire with a lug connector on the other end. Secure the stranded cable using the same method as for the strap.

e. After attaching all ground straps, tape (weatherproof) the exposed area.

1.3.3.5 Lightning-Generated Transient Surge Protection. Electrical and electronic equipment at various facilities has been severely damaged by lightning-generated transients. The transients occur on externally exposed lines that directly interface equipment. Externally exposed lines are outside lines, buried, overhead, etc, that are exposed to weather elements. The lines include incoming ac service conductors, and equipment signal, status, control, grounding conductors and intrafacility ac and dc powerlines. This section identifies transient source and damage, waveforms and amplitudes of projected transients on different types of lines, frequency of transient occurrence, and effective methods to implement to preclude equipment damage and operational upset when transients occur.

1.3.3.5.1 Transient Source and Equipment Damage.

a. Electrical and electronic equipment comprising an operating system is susceptible to damage from lightning-generated transient surges via two primary sources as follows:

(1) Transient surges coupled to equipment from incoming commercial ac power conductors.

(2) Transient surges coupled to equipment by connected facility control, status, power, ground, data and signal lines that originate or terminate at equipment located externally to the building or structure housing the equipment of interest.

b. Damage resulting from lightning-generated transients occurs in many forms. Entire equipment chassis have been exploded and burned, and wall-mounted equipments have been blown off the wall by large-magnitude transient energy. However, two forms of damage are most prevalent and are listed below:

(1) Sudden catastrophic component failure at the time of transient occurrence.

(2) Shortened operating lifetime of components resulting from over-stress at time of transient occurrence.

1.3.3.5.2 Minimizing Damage.

a. Damage can be minimized, and in most instances eliminated, by properly using the generally field-proven protection methods detailed in this section. In order to be cost effective and to provide effective protection, allocation of protection must be divided into three general categories which are:

(1) Transient suppression (metal conduit and guard wires) for outside lines that interface equipment to be protected.

(2) Installation of transient suppression devices on both ends of exterior lines immediately after equipment building penetration or at exterior equipment termination, and on incoming ac service entrance lines at the facility main service disconnect means. On shielded facilities, transient suppression devices (TSD's) should be installed in an entry vault or inside the main service disconnect box.

(3) Including transient suppression as an integral part of protected equipment at the exterior line-equipment interfaces.

b. If realistic transient protection is to be designed, frequency of transient occurrence, amplitudes and waveforms of transients, and the withstand level of protected equipment must be defined. The withstand level is the short-duration voltage and current surge levels that equipment can withstand without overstressing or immediate destruction of components occurring, and without equipment operational upset occurring. The information required for effective protection is provided in this section. The most susceptible components are identified together with typical withstand levels. Frequency of transient occurrence is also provided. Because of the large physical size of incoming ac service conductors, less impedance (resistance and inductance) is presented to transient surge current flow. As a result, amplitude and waveforms of transients appearing at ac inputs are quite different from those appearing at control, status, data, signal, and in-system powerline inputs. Therefore, protection for incoming ac power service conductors is discussed separately from that for other externally exposed lines.

1.3.3.5.3 Susceptible Components. Integrated circuits, discrete transistors and diodes, capacitors, and miniature relays, transformers, and switches used in the design of solid-state equipment are very susceptible to damage from lightning-generated transient surges. Other components are not immune to damage but are susceptible to a much lesser degree. Standards do not exist for specifying the withstand level against lightning-transients for most equipment and components. Therefore, accurate information must be obtained from manufacturers, laboratory testing performed or conservative engineering estimates made. Typical withstand level limits for some common types of equipment and components are:

a. Integrated circuits: 1.5 times normal rated junction and Vcc voltage.

b. Discrete transistors: 2 times normal rated junction voltage.

c. Diodes: 1.5 times peak inverse voltage.

d. Miniature relays, transformers, and switches: 3 times rated voltage.

e. Capacitors: 1.5 times dc working voltage unless transient dielectric punch-through voltage known.

f. DC power supplies with step-down transformer and diode bridge: 1.5 times diode peak inverse voltage (PIV) rating times the transformer secondary to primary voltage ratio.

g. Small motors, small transformers and light machinery: 10 times normal operating voltage.

h. Large motors, large transformers and heavy machinery: 20 times normal operating voltage.

1.3.3.5.4 Frequency of Transient Occurrence. Precise calculation of the number of lightning-generated transients that will occur at a specific location n a specified time interval is not possible. However, enough observations have been made to permit statistical evaluation of the number of lightning flashes that are likely to occur in an area with a known average number of thunderstorm days per year. Some flashes may not produce any transients while others will produce several transients. The available data, after considerable averaging and rounding, is provided in Table 1-5. The table lists a typical number of transients that might be expected to occur from lightning strikes at facilities located in high-and low-incident lightning areas. When used in conjunction with Figure 1-34, the table will permit calculation of the number of lightning surges that will occur anywhere in the United States in a 10-year period. Decrease 1750 by 10% for each 10 decrease in the number of thunderstorm days per year.

Table 1-5. Frequency of Transient Occurrences

Number of Lightning Surges In 10 Years at One Facility	
High Incident Area (100 Thunderstorm Days Per Year)	Low Incident Area (10 Thunderstorm Days Per Year)
1750	175

1.3.3.5.5 Transient Definition, AC Service Conductors. Prediction of the exact amplitude, waveforms, and number of transients that will occur at a particular facility over a specific time interval is not possible. However, current amplitudes generated by many direct lightning strikes have been measured, and the waveforms for the current have been measured and recorded. Also, sufficient data has been recorded to permit statistical calculation of waveforms and amplitudes that are likely to occur. This data is provided in subsequent paragraphs. Frequency of occurrence is provided in paragraph 1.3.3.5.4.

a. Transient amplitudes from direct strikes. Measured current amplitudes resulting from direct lightning strikes have varied from 1,000 amperes to 250,000 amperes. Results of several thousand measurements have been reduced and are provided in Table 1-6. As shown in Table 1-6, typical peak current is 10 to 20 kiloamperes. Table 1-7 tabulates the peak current amplitudes measured for 2721 flashes. The median peak value for the peak currents was approximately 15 kiloamperes. This is in agreement with the typical values

provided in Table 1-6, and there is agreement among authoritative sources that the peak current for a large percentage of strikes is in the 10 to 30 kiloampere range. Note that in Table 1-7, 1818 of the 2721 current amplitudes or 66.8% were in the range of 1 to 20 kiloamperes. Also note that only 14% were greater than 40,000 amperes, and it follows directly that 86% of the peak amplitudes were 40 kiloamperes or less. Only 45 of the 2721 measured amplitudes, or 1.65%, were above the 100-kiloampere level. Also, it is emphasized that the peak current amplitudes noted in the foregoing resulted from direct strikes to metal towers for primary transmission lines.

b. Induced transient amplitude. After installation of appropriate transient suppression, induced transients will still occur as a result of close proximity, high-intensity strikes, and some transient energy will be coupled through the service transformer onto the incoming ac service lines. The amplitude of those coupled and induced transients will be reduced a minimum of 50% of direct strike amplitudes due to earth resistance, attenuation of electromagnetic fields due to propagation through air, and coupling losses imposed by the service transformer winding. Therefore, 86% of the transient current surges appearing at a facility main service disconnect means will be 20 kiloamperes or less, and the greatest percentage, 68%, of the surges will be in the 500 ampere to 10,000 ampere range. Only 1% of the surges will be above 50 kiloamperes, and only 0.25% will be above 75 kiloamperes. Table 1-8 provides a tabulation of transient amplitudes and the percentage of transients on incoming ac lines that will as a maximum be of the amplitude listed.

c. Transient waveforms, ac lines. Waveshapes for transients will vary depending on the proximity of the strike, intensity of the strike, and length and inductance of the incoming ac service lines. Table 1-6 lists the typical time to peak current as 1.5 to 2 microseconds and 40 to 50 microseconds as the typical time from the start of the pulse until the current decays to 50% of peak value. Thus, a typical waveform for current surges generated by a direct strike is 2-by-40 microseconds. Transients measured at main service disconnects (amplitudes in excess of 3,000 volts) have had rise times of 1 to 2 microseconds and decay times of 20 to 40 microseconds. However, the inductance of some incoming ac service lines will slow down the rise time slightly. Most manufacturers of secondary ac surge arresters use either 8-by-20 or 10-by-20 microsecond current waveforms for testing and specification purposes, primarily because the waveform is relatively easy to generate while a 2-by-40 microsecond waveform is quite difficult to generate. The 8-by-20 or 10-by-20 microsecond waveforms are considered suitable for testing. However, the user of the arrester should be aware of the following:

(1) Transients with rise times faster than 8 microseconds may appear across the arrester terminals resulting in a higher sparkover or turn-on voltage for the arrester than specified.

(2) Transients with decay times up to 40 microseconds may appear across the arrester terminals which will require the arrester to dissipate considerably more transient energy than would be required for a 20 microsecond decay time.

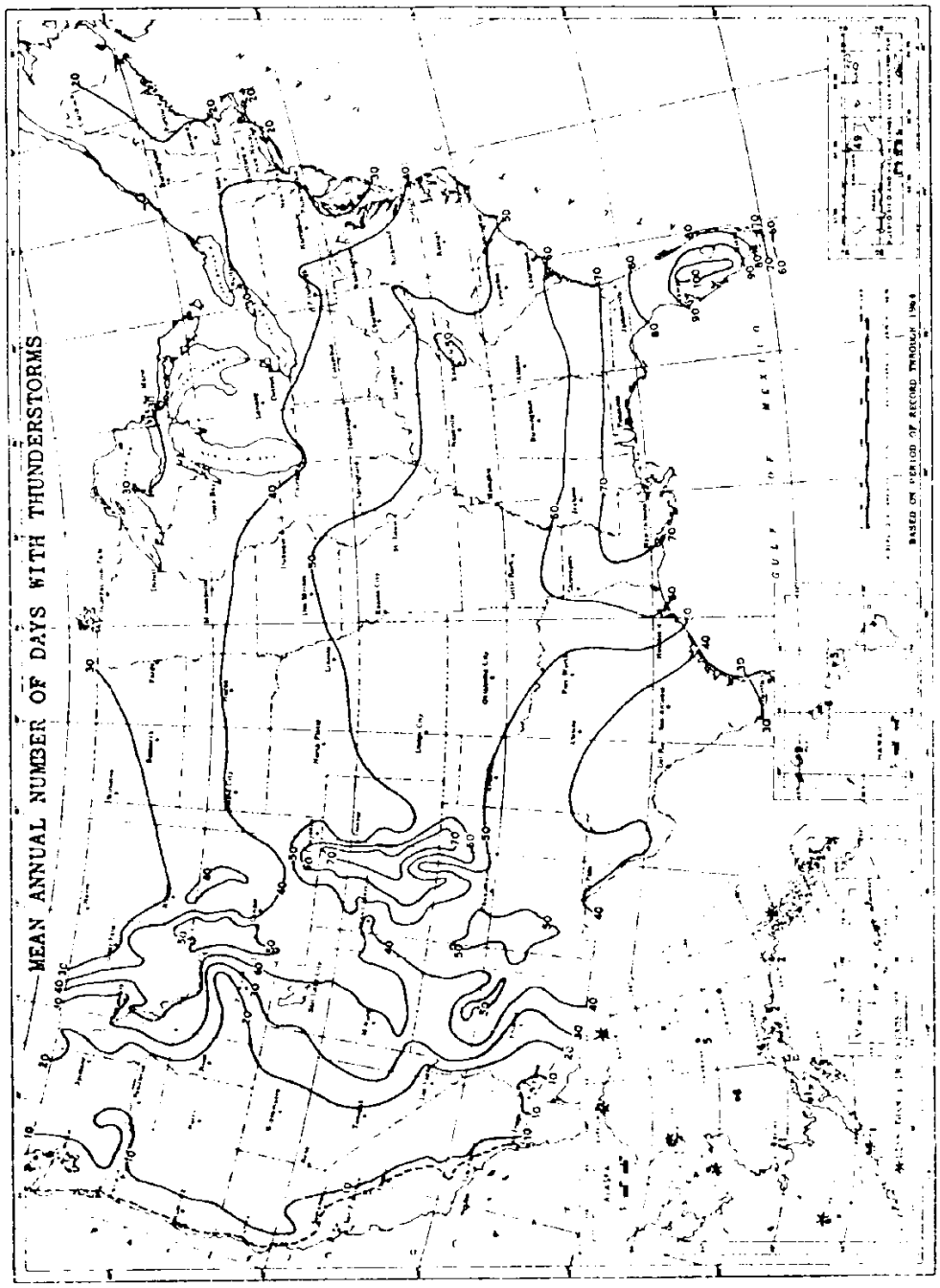

Figure 1-34. Mean Number of Thunderstorm Days per Year for the United States

Table 1-6

Parameter for Direct Lightning Strike Current

Parameter	Minimum	Typical	Maximum
Number of return strokes per flash	1	2 to 4	26
Time between strokes (ms)	3	40 to 60	100
Peak current per return stroke (kA)	1	10 to 20	250
Time to peak current (ps)	< 0.5	1.5 to 2	30
Rate of rise (kA/µs)	< 1	20	210
Time to half-value (µs)	10	40 to 50	250
Duration of continuing current (ins)	50	150	500
Peak continuing current (amperes)	30	150	1600

Table 1-7. Peak Currents from Direct Lightning Strikes

Range of current, (amperes)	No. of Flashes with Peak Current in Range	No. at or above Level	Percentage at or above Level
1,000 - 5,000	567	2,721	100
5,001 - 10,000	611	2,154	79.2
10,001 - 20,000	640	1,543	56.7
20,001 - 30,000	296	903	33.2
30,001 - 40,000	227	607	22.3
40,001 - 50,000	140	380	14.0
50,001 - 60,000	80	240	8.82
60,001 - 70,000	61	160	5.88
70,001 - 80,000	22	99	3.64
80,001 - 90,000	21	77	2.83
90,001 - 100,000	11	56	2.06
100,001 - 110,000	11	45	1.65
110,001 - 120,000	9	34	1.25
120,001 - 130,000	9	25	0.918
130,001 - 140,000	7	16	0.588
140,001 - 150,000	2	9	0.331
150,001 - 160,000	3	7	0.257
160,001 - 170,000	0	4	0.137
170,001 - 180,000	1	4	0.147
180,001 - 190,000	0	3	0.110
190,001 - 200,000	1	3	0.110
200,001 - 210,000	0	2	0.073
212,000	1	2	0.073
218,000	1	1	0.037
	2,721		

Table 1-8. Transient Surge Amplitudes

Transient Surge Amplitude (Amperes)	Percentage of Transients at Listed Amplitude
500 to 2,500	21%
2,501 to 5,000	23%
5,001 to 10,000	24%
10,001 to 20,000	19%
20,001 to 30,000	8%
30,001 to 40,000	3%
40,001 to 50,000	1%
50,001 to 75,000	0.9%
75,001 to 100,000	0.1%

1.3.3.5.6 Methods for Transient Protection on AC Service Conductors. Proper use of the following provides effective protection against lightning generated transients on incoming ac powerlines.

a. Completely enclosing buried lines in ferrous metal, electrically continuous, watertight conduit.

b. Use of overhead guard wires to protect overhead lines.

c. Installation of a secondary ac surge arrester at the facility main service disconnect means.

d. Including surge suppressors as in integral part of equipment at ac power inputs and rectifier outputs of low-level (5 to 48 volt) power supplies, when a power supply operates from commercial ac power and supplies operating power for solid-state equipment.

e. Installation of suitable surge arresters on the primary and secondary of the service transformer.

f. Installation of powerline filters shall be in accordance with NACSIM 5203.

1.3.3.5.7 Use of Ferrous Metal Conduit. Since transients are induced on buried lines by electromagnetic waves created by lightning current flow, all buried incoming ac service lines should be completely enclosed in ferrous metal, watertight conduit. To be effective, the conduit must be electrically continuous and effectively bonded to the building entry plate and grounded to earth ground at each end. No. 2 AWG bare copper stranded cable is suitable for the earth ground connection, and exotherrnic welds provide effective bonding in earth. Approved pressure connectors are suitable for use above ground. The conduit should extend from the service transformer secondary to the facility main service disconnect means. This use of metal conduit will eliminate low-level induced transients, and will attenuate otherwise high-amplitude induced transients by 90% minimum. Although the conduit provides effective protection against induced transients, it does not provide protection against transients that enter the service conductors directly from the secondary of the service transformer.

1.3.3.5.8 Use of Overhead Guard Wires. Since enclosing overhead incoming ac service lines in metal conduit is not feasible, experimentation has proved that the use of an overhead guard wire provides an effective level of protection for overhead service conductors against direct lightning strikes. This guard wire also provides a low level of protection against transients induced on lines by close proximity strikes as well as nearby cloud to cloud discharges. The guard wire must be located above and parallel to the service conductors. To be effective, the height of the guard wire must be that required to form a 1:1 cone of protection for the service conductors (see Volume I, Section 3.5.2), and the guard wire must extend from the secondary of the service transformer for the facility to the facility service entrance fitting. Also, at each end the guard wire must extend to, and be bonded to, an effective earth ground or to the earth electrode subsystem of the facility. When the distance between terminating facilities exceeds 250 feet, the guard wire shall also be bonded to a ground rod meeting the requirements of MIL-STD-188-124A, paragraph 5.1.1.1.4. Also refer to MIL-STD-188-124A, paragraph 5.1.1.3.10.2 regarding the type and size requirements of the guard wire. Since the guard wire and the earth electrode subsystem are comprised of different metals, exothermic welding is recommended.

1.3.3.5.9 Protection of Underground Cables.

a. Protect against direct lightning strikes to buried cable by installing a guard wire above the cables or cable duct. A 1/0 AWG bare copper cable laid directly over the protected cables as shown in Figure 1-35(a) is recoin mended. At least 25.4 cm (10 inches) should be maintained between the protected cables and the guard wire.

b. For a relatively narrow spread of the cables, 0.9 meters (3 feet) or less, or for a duct less than 0.9 meters (3 feet) wide, only one guard wire cable is necessary. For wider cable spreads or wider ducts, at least two 1/0 AWG cables should be provided as illustrated in Figure 1-35(b). (Since the guard wire and protected cables are embedded in the earth, the applicable cone of protection is not known.)

1.3.3.5.10 Buried Guard Wire. Experimental use of a buried guard wire embedded in soil above and parallel to buried cable runs not enclosed in metal conduit has provided effective attenuation of lightning-induced transients. Use of the guard wire is recommended for protection of buried equipment lines not enclosed in metal conduit. Bare 1/0 AWG copper wire has provided the most effective protection during experimental use. To be effective, the guard wire must be embedded in the soil a minimum of 25 cm (10 inches) above and parallel to the protected cable run or duct. When the width of the cable run or duct does not exceed 0.9 meters (3 feet), one guard wire, centered over the cable run or duct, provides adequate protection. When the cable run or duct is more than 0.9 meters (3 feet) wide, two guard wires should be installed. The guard wires should be spaced at least 30 cm (12 inches) apart and be not less than 30 cm (12 inches) nor more than 45 cm (18 inches) inside the outermost wires or the edges of the duct. To be effective, the guard wires must be bonded to the earth electrode subsystem at each terminating facility. Exothermic welds provide the most effective bonding. The requirement and need for underground guard wires shall be determined by the project and civil engineer and shall be determined on a case and location basis dependent upon the priority of the circuit and the degree of lightning anticipated.

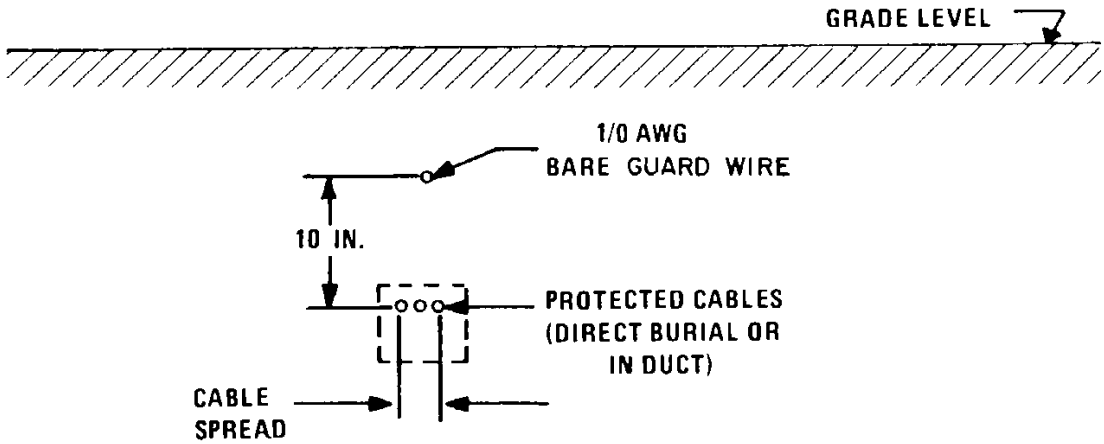

(a) CABLE SPREAD LESS THAN 3 FEET

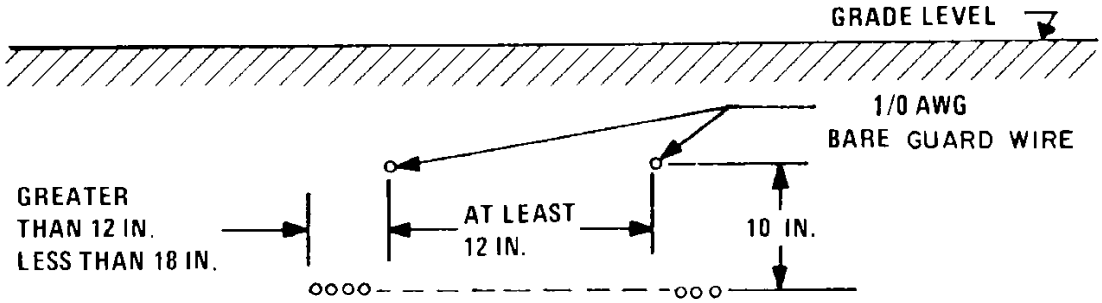

(b) CABLE SPREAD 3 FEET OR GREATER

Figure 1-35. Lightning Protection for Underground Cables

1.3.3.5.11 Secondary AC Surge Arrester. Installation of a properly selected secondary ac surge arrester at the facility main service disconnect means provides the best method for ensuring that high energy transients are not coupled to equipment by ac distribution lines within the facility. The surge arrester installed must have certain characteristics to ensure adequate protection.

a. Characteristics.

(1) Be capable of safely dissipating transients of amplitudes and waveforms expected at the facility for a predetermined period of time. Selection of an arrester that will provide protection for a period of ten years is recoin mended.

(2) Have a turn-on time fast enough to ensure that transient energy will not cause damage before the surge arrester turns on and clamps.

(3) Maintain a low enough discharge (clamp) voltage while dissipating transient current to prevent damage to protected equipment.

(4) Have a reverse standoff voltage high enough to ensure nonconduction during normal operation.

(5) Be capable of complete extinguishing after firing on an energized line.

b. Additional requirements. In addition to the above, the surge arrester must be properly installed to ensure optimum operation. The input to each phase arrester contained in the surge arrester should be fused to provide protection against overload of, or damage to, the ac supply in the event an arrester should short. Also, Indicator lights and an audible alarm that go off when a fuse opens should be provided on the front of the surge arrester enclosure as a maintenance aid.

1.3.3.5.12 Surge Arrester Installation. Proper installation of the surge arrester is of vital importance for optimum operation. A surge arrester with excellent operating characteristics cannot function properly if correct installation procedures are not used. The most important installation criteria are provided below and applies to surge arrester phase input connections and the ground connection. All surge arresters should be installed in accordance with the manufacturer's recommendations.

a. Installation criteria.

(1) If possible, install arresters inside the first service disconnect box to keep interconnecting lead lengths as short as feasible.

(2) Use interconnecting wire of sufficient size to limit resistance and inductance in the transient path to ground through the surge arrester.

(3) Interconnecting wiring should be routed as straight and direct as possible with no sharp bends, and the least number of bends possible.

(4) Do not include loops in the wiring.

(5) Must be grounded by the shortest low impedance path available.

b. Surge arrester input connections. Installation of surge arresters is shown for grounded and ungrounded service in Figures 1-36 and 1-37 respectively. For best possible protection, the line supply side of the main service disconnect means should be connected to the phase input(s) of the surge arrester. However, when necessary to facilitate removal of ac power for surge arrester maintenance, it is permissible to connect the surge arrester to the load side of the main service disconnect means. In order to prevent introducing excessive inductance and resistance in the transient path to the surge arrester, No. 4 AWG (minimum) insulated stranded copper wire of the minimum feasible length must be used to make the interconnection(s) unless otherwise recommended and guaranteed by the manufacturer. Also, the interconnecting wiring must not contain loops or sharp bends. Otherwise, the response time of the surge arrester will be delayed and a higher clamp voltage than that of the surge arrester will be impressed across the protected equipment, thus increasing the possibility of damage. In the event a very fast transient should occur, it is quite likely that the surge arrester would never turn on, and all of the transient energy would be dissipated by supposedly protected equipment.

c. Surge arrester ground connection. When the surge arrester is not properly grounded, its response time will be delayed and a higher clamp voltage than that of the surge arrester will be impressed across the equipment being protected. This can also be expected if the earth ground connection for the surge arrester contains loops or sharp bends or is not properly bonded to the earth electrode subsystem. To overcome this problem, stranded copper wire specified in accordance with Article 280 of the NEC must be used to make the ground connection unless other specifications are provided by the [manufacturer of the surge arresters. Figure 1-36 shows the surge arresters installed to ensure the [nest direct route to ground thereby minimizing the lead inductance(s) and ensure the firing of the surge arresters. For best results exothermic welds should be used for bonding to the earth electrode subsystem. UL –approved pressure connectors are suitable for above-ground bonds.

1.3.3.5.13 Operating Characteristics of Surge Arresters. Operating characteristics of different types of surge arresters are discussed in the following subparagraphs. Guidelines for selection of an adequate surge arrester are also provided.

a. Transient dissipation capability. Selection of a surge arrester that will provide adequate protection against worst case transients is recoin mended. Waveforms are defined in Section 1.3.3.5.5. The worst case waveform is 2-by-40 microseconds. The number and amplitude of transients that can be expected to occur can be determined by referring to Tables 1-5 and 1-8.

(1) In a high-lightning incident area (average of 100 thunderstorm days per year), 1750 transients are expected to occur in a 10-year period. Referring to Table 1-8, it can be determined that transient amplitudes and occurrence may be as listed in Table 1-9.

(2) In a low-lightning incident area (average of 10 thunderstorm days per year), only 175 transients are expected to occur in a 10-year period. Transient occurrence and amplitudes may be as listed in Table 1-10.

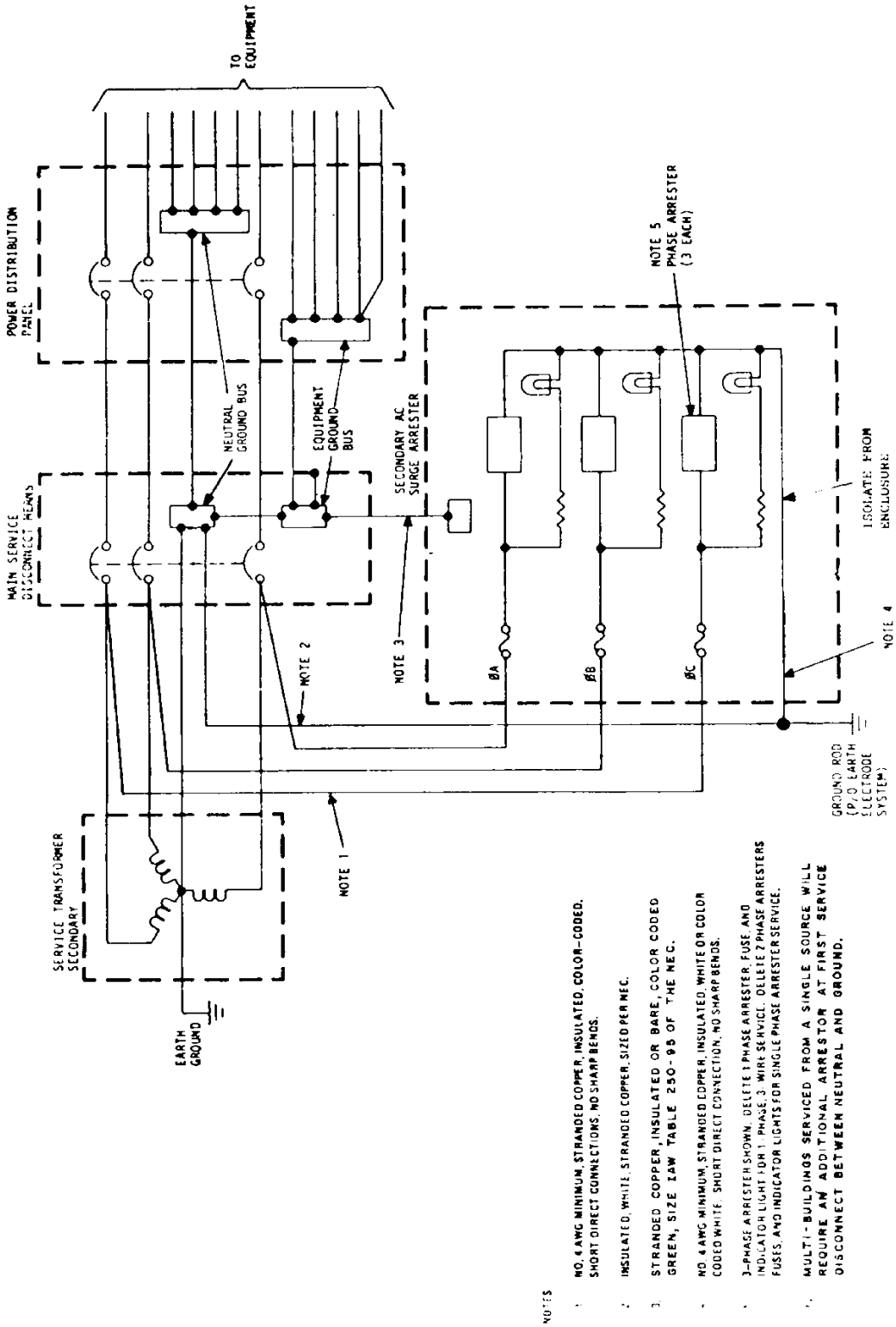

Figure 1-36. Secondary AC Surge Arrester Installation, Grounded Service (Single Building from Single Source)

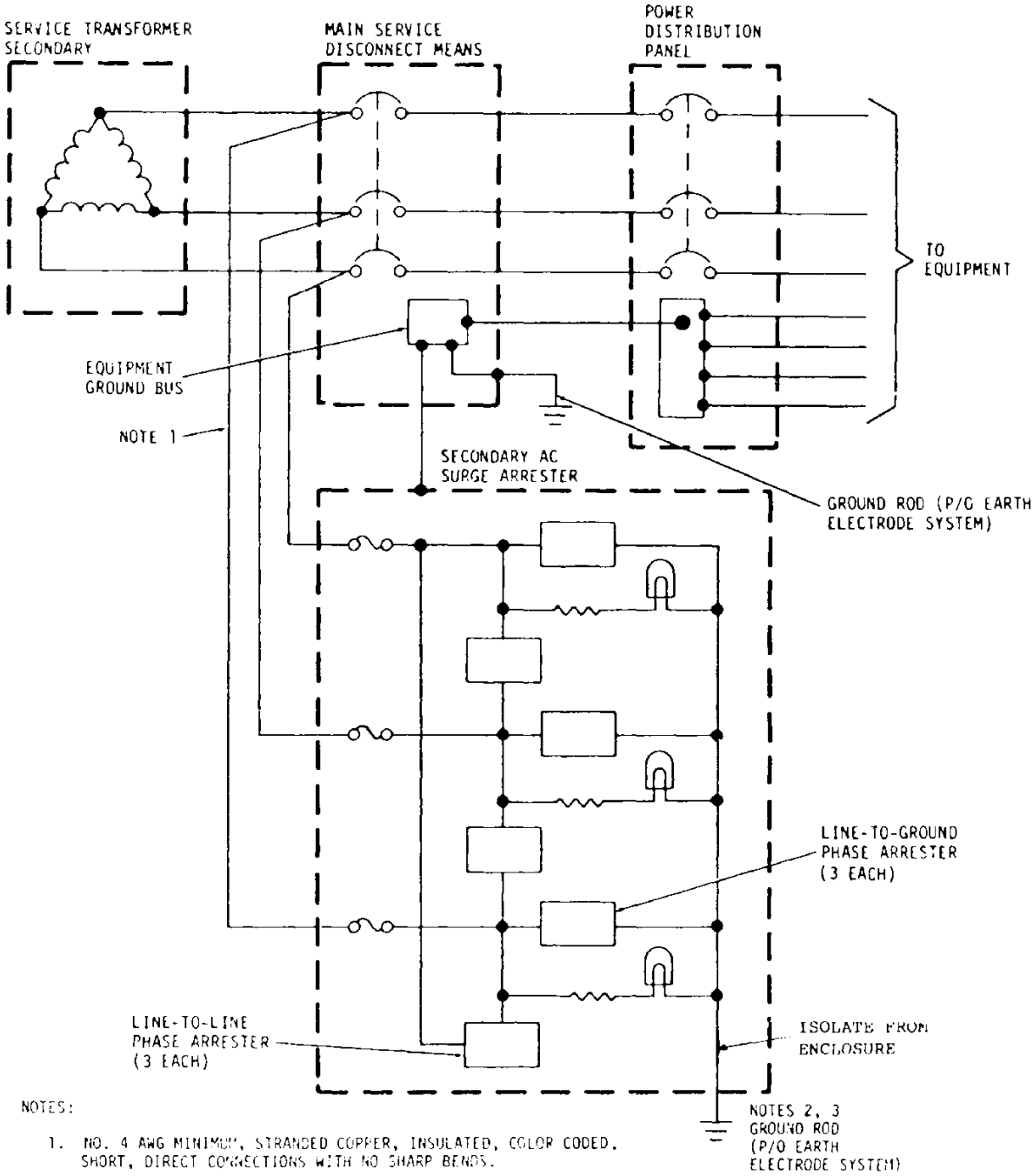

NOTES:

1. NO. 4 AWG MINIMUM, STRANDED COPPER, INSULATED, COLOR CODED. SHORT, DIRECT CONNECTIONS WITH NO SHARP BENDS.
2. NO. 2 AWG MINIMUM, STRANDED COPPER, INSULATED. SHORT, DIRECT CONNECTION WITH NO SHARP BENDS.
3. CAN BE CONNECTED TO GROUND BUS IN MAIN SERVICE DISCONNECT MEANS.

Figure 1-37. Secondary AC Surge Arrester Installation, Ungrounded Service

Table 1-9. Transient Occurrences, High-Incident Lightning Areas

Transient Amplitude (Amperes)	No. of Transients in 10-year Period
500 to 2,500	368
2,501 to 5,000	402
5,001 to 10,000	420
10,001 to 20,000	333
20,001 to 30,000	140
30,001 to 40,000	52
40,001 to 50,000	17
50,001 to 75,000	16
75,001 to 100,000	2

Table 1-10. Transient Occurrences, Low-Incident Lightning Areas

Transient Amplitude (Amperes)	No. of Transients in 10-year Period
500 to 2,500	37
2,501 to 5,000	40
5,001 to 10,000	42
10,001 to 20,000	33
20,001 to 30,000	14
30,001 to 40,000	5
40,001 to 50,000	1.75
50,001 to 75,000	1.5
75,001 to 100,000	0.175

(3) Transient amplitudes are less at small electronic facilities. Recorded data substantiates that large electronic facilities tend to attract higher intensity strikes than small electronic facilities. The transient amplitudes listed in Sections 1.3.3.5.13a(l) and a(2) are for large electronic facilities, and the amplitudes should be decreased by 50% for small electronic facilities. Large electronic facilities are defined as requiring more than 100 amperes per phase for norm al operation. The transient amplitudes of Tables 1-9 and 1-10 should be decreased by 50% when relating to a small facility.

b. Turn-on time. Turn-on time (response time) is the time required for an arrester to turn on and clamp a transient after turn-on voltage is impressed across device terminals. All basic suppressor devices used in manufacture of surge arresters are voltage dependent for ionization, breakdown, and other phenomena associated with breakdown. Therefore, a low turn-on voltage enhances a faster turn-on time. Turn-on time requirements for a surge arrester must be directly related to the withstand level for equipment and components being protected. For instance, if only heavy duty electrical equipment, such as motors, contractors, and switches are being protected, relatively slow turn-on of 1 to 5 microseconds can be tolerated. However, if solid-state electronic equipment, or a combination of electrical and electronic solid-state equipment is being protected, turn-on time becomes much more critical. In general, the most rapid response time available is desirable. However, cost and current dissipation capability normally place constraints on such selection criteria. Four types of arresters are currently manufactured as noted below. Additional data for each type is provided in 1.3.3.5.15.

(1) Gas-filled spark gap with series-connected nonlinear resistance.

(2) Zinc oxide nonlinear resistor (ZNR) or metal oxide varistor (MOV).

(3) Solid-state.

(4) Hybrid of above components (development stage).

c. Important turn-on time characteristics. Generalized characteristics for the three basic types of surge arresters are listed in Table 1-11. Turn-on time of 50 nanoseconds is sufficiently fast to protect all except very critical components that would directly receive transient energy prior to turn-on and clamp of the surge arrester. Solid-state units may be used for protection of very critical equipment components, and the gas-filled spark gap type will provide adequate protection for heavy duty electrical equipment such as motors, contractors and switches. However, arresters with slow turn-on time and high turn-on voltage should not be used to protect electronic equipment that has low-voltage, fast turn-on transient suppression devices or circuits included as an integral part of the equipment. Otherwise, the transient suppression in the equipment will turn on and attempt to dissipate transient energy before the surge arrester installed at the main service disconnect means turns on. In most cases, this will rapidly destroy equipment-level transient suppression. The impedance and inductance of power distribution panels and power distribution wiring within the facility will tend to slow down transient rise time and also dissipate some transient energy both before and after the surge arrester turns on. The resistance and inductance works in conjunction with the surge arrester at the main service disconnect means to provide additional protection. However, the true degree of protection thus provided varies widely due to varying transient waveforms, and size and length of distribution wiring within the facility. In summary, the most important characteristics for turn–on time are:

(1) Turn-on time must be rapid enough to preclude damage to equipment resulting from over-voltage before the surge arrester turns on and clamps the incoming transient.

Table 1-11. Generalized Characteristics for Surge Arresters by Type

Type	Turn-on Time	Current Capacity	Firing/Clamp Voltage	cost
Gas-filled spark gap	5-250 nanoseconds for 10 kV/µs rise time	Extreme duty to 150,000 amperes lifetime: 2500 surges at 10,000 amperes	High -350 to 5500 volts (firing)	Moderate -$25 to $750
MOV or ZNR	50 nanoseconds or less, any rise time	Varies - can be equivalent to spark-gap type	Moderate -300 to 3000 volts (clamp)	Moderate -$50 to $1,000
Solid State	10 nanoseconds or less, any rise time	Varies - Generally 50 to 100 amperes except for costly units	Low -275 to 750 volts (clamp)	High -$100 to $25,000

(2) Turn-on voltage and time for the surge arrester must be compatible with the same characteristics of transient suppressors/circuits included as an integral part of protected equipment. Otherwise equipment-level transient suppressors/circuits will attempt to dissipate the transient before the surge arrester turns on. When this occurs, the equipment level transient suppression will likely be destroyed resulting in damage or operational upset of protected equipment.

d. Discharge (clamp) voltage. The clamp voltage, sometimes referred to as the discharge voltage, for a surge arrester is the voltage that appears across the arrester input terminals and the ground terminal while conducting a transient surge current to ground. The clamp voltage waveform occurring across the surge arrester installed at the main service disconnect means appears across the protected equipment after losses imposed by inductance and resistance of power distribution lines and panels.

(1) In general, a surge arrester with the lowest clamp voltage possible is desirable. An all-solid-state arrester provides the lowest clamping voltage available (Table 1-11). However, as with turn-on time, other factors such as current dissipation capability and cost normally place constraints on simply installing a surge arrester at the main service disconnect means with the lowest clamping voltage available.

(2) In new facilities calling out the latest design equipment, transient surge suppression generally is included as an integral part of the equipment ac input. Higher clamping voltages can therefore be tolerated at the main service disconnect means. When good engineering design practices are used, equipment level suppressors will have a slightly lower turn-on voltage threshold and a slightly faster turn-on time than the surge arrester at the main service disconnect means. This permits the equipment-level suppressors to maintain a lower clamping level to provide maximum equipment protection. Therefore, when a transient occurs, the equipment level suppressor(s) will turn on first.

(3) This circuit operation may generate the requirement for a properly sized (2-microhenry minimum) inductor to be installed in series with applicable ac conductors. If its need has been ascertained, it must be installed between the surge arrester and the integral equipment-level transient suppressor. It may also be designed as an integral part of the surge arrester or the equipment-level transient suppressor.

(4) The equipment-level suppressor will immediately start toward its clamp voltage as transient current is conducted. Because of resistance and inductance in the power distribution lines and panels, the surge arrester will turn on very soon (nanoseconds) after the equipment-level suppressor(s), and will dissipate most of the remaining transient energy. After the surge arrester turns on, the equipment level suppressor(s) are required to dissipate only the transient energy resulting from the clamp voltage of the surge arrester.

(5) Thus, the surge arrester dissipates most of the transient surge, and the equipment-level suppressor(s) provide equipment protection against fast rise time transients and reduce the surge arrester clamp voltage to levels that can be safely tolerated by protected equipment. In summary, the clamp voltage for the surge arrester must be low enough while dissipating a high-energy transient to provide adequate equipment protection taking into consideration:

(a) Protection provided by transient suppression that is an integral part of the facility equipment.

(b) Impedance (resistance and inductance) of power distribution lines and panels within the facility.

e. Reverse standoff voltage. Reverse standoff voltage is specified in various ways by surge arrester manufacturers such as maximum allowable voltage, voltage rating, and reverse standoff voltage. For usage herein, reverse standoff voltage is defined as the maximum voltage that can be applied across the surge arrester and still permit the surge arrester to remain in an off state (current leakage through arrester to ground 100 microampere or less). Good engineering practice dictates that the surge arrester remains off during normal operation.

(1) Design of effective lightning transient protection requires that the surge arrester turn on very rapidly at the lowest voltage possible when a transient occurs. In addition, it is desirable that a low clamp voltage be maintained across the surge arrester while conducting surge current to ground. Turn-on voltage and associated turn-on time as well as clamp voltage are proportional to reverse standoff voltage. That is, an arrester with a low reverse standoff voltage has a lower turn-on voltage (and thus a faster turn-on time) and a lower clamp voltage than an arrester with a higher reverse standoff voltage. Therefore, it is important that the surge arrester has the lowest possible reverse standoff voltage.

(2) For effective protection, the reverse standoff voltage should be between 200 to 300 percent of nominal line-to-ground voltage of the appropriate ac service lines for a spark gap type surge arrester that is to be installed line to ground. The reverse standoff voltage should also be between 200 to 300 percent of nominal line-to-line voltage of appropriate ac service lines for a spark gap type surge arrester that is to be installed line to line. The reverse standoff voltage for MOV and ZNR type arresters should be 175 ± 25 percent of the nominal line-to-ground or line-to-line voltages of the appropriate ac service lines.

1.3.3.5.14 Desirable Operating Characteristics for Transient Suppressors. The transient suppressor characteristics listed below are required for effective protection at the facility level:

a. Turn-on (response) time: 50 nanoseconds or less.

b. Standoff voltage and leakage current: To ensure that the suppressor remains off except during transient occurrence, the standoff voltage should be between 200 to 300 percent above the nominal line voltage for spark gap type suppressors and approximately 175 ± 25 percent for MOV and ZNR type suppressors. Leakage current should not exceed 100 microampere at standoff voltage.

c. Polarity: Bipolar or unipolar, depending on line voltage.

d. Turn-on voltage: 125 percent of standoff voltage maximum at one milliampere for MOV and ZNR type suppressors. Also, 125 percent of the standoff voltage for gas-filled spark gap suppressors.

e. Clamp voltage: (Also known as discharge voltage) should not exceed 200 percent of the turn-on voltage for transients 100 amperes peak or 225 percent of the turn-on voltage for transients 1000 amperes peak.

f. Operating life: Capable of dissipating number and amplitude of transients projected to occur over a 10-year period. See Section 1.3.3.5.17.

g. Self-restoring capability: Essential that suppressor automatically restores to off state when applied voltage drops below turn-on voltage.

1.3.3.5.15 Characteristics of Different Types of Surge Arresters. Various types of surge arresters are presently available for purchase as off-the-shelf items from a multitude of manufacturers. Most have desirable characteristics, and also have undesirable characteristics. Some types have the capability of dissipating tremendous amounts of current, but turn on relatively slowly (150 to 200 nanoseconds) after turn-on voltage appears across device terminals. Another type turns on more rapidly (50 nanoseconds or less) but will not dissipate as much current as the slower devices, unless many devices are connected in parallel which is not totally desirable. Solid-state arresters are available which have very fast turn-on times but most of them are limited in current dissipation capability except for expensive units that range in cost from $7,500 to $25,000. Several hybrid units are currently under development that consist of a solid-state suppressor for dissipation of low-energy transients, and a separate suppressor section for dissipation of high-energy transients. The two suppressor sections are normally separated by a choke in series with the protected phase line. The three most important characteristics of an ac surge arrester are the capability to dissipate the required levels of surge current, maintain a low discharge (clamp) voltage while dissipating the transient current, and a fast response time. The fast response time is important to prevent the appearance of high level transient energy (overshoot voltage) across protected equipment for an intolerable length of time before the arrester turns on and clamps. Various types of suppressors are discussed below together with typical operating characteristics.

a. Gas-filled spark gap with series-connected silicon carbide block. The gas-filled spark gap arrester is capable of conducting very high currents. Some units have an extreme duty discharge capacity of 150,000 amperes peak for one transient with a 10-by-20 microsecond waveform. Minimum life of such units is dissipation of 2500 surges of 10,000 amperes peak surge current with a 10-by-20 microsecond waveform. Impulse sparkover (turn-on) voltage is 1400 volts peak for a transient with a 10 kV/ µs waveform for two types of arresters. Some typical discharge (clamp) voltages are listed in Table 1-12 for 10-by-20 microsecond waveforms of the transient amplitudes listed:

Table 1-12. Typical Maximum Clamp Voltage for Spark Gap Arresters

Peak Surge Amplitude	Maximum Clamp Voltage
10,000 Amperes	2,000 volts
40,000 Amperes	3,000 volts
150,000 Amperes	5,500 volts

(1) Follow current. The typical discharge (arc) voltage across a spark gap is 20 to 30 volts while it is in full conduction. Because of the low arc voltage, the voltage and current available from the ac power supply would maintain the spark gap in an on state after a transient was dissipated until the first zero crossing of the power supply or until a supply line fuse opened, a line burned open, the spark gap burned open, or the service transformer burned open. For this reason, a silicon carbide block (nonlinear resistor) is connected in series with a spark gap to ground to ensure that the spark gap extinguishes on the first zero crossing of the connected line, and, more importantly, to limit follow current through the spark gap after a transient is dissipated until the first zero crossing of the powerline (8.3 milliseconds maximum). The silicon carbide block is a nonlinear resistance, and resistance decreases as applied voltage increases. Thus, the resistance is relatively high at powerline voltages to limit follow current, but decreases to a fraction of an ohm when high-level transient voltage is applied. However, the resistance remains high enough to generate a relatively high clamp voltage when discharging high-amplitude transient currents.

(2) Sparkover (turn-on) voltage. Sparkover time for the spark gap arrester is directly related to transient risetime since a finite amount of time is required for the spark gap to ionize and transition from the off mode through the glow region and into the arc mode of operation. Also, ionization time is to some extent related to the risetime of the transient. Transition time from off to arc mode of operation is typically 150 to 200 nanoseconds after sparkover voltage appears across arrester terminals.

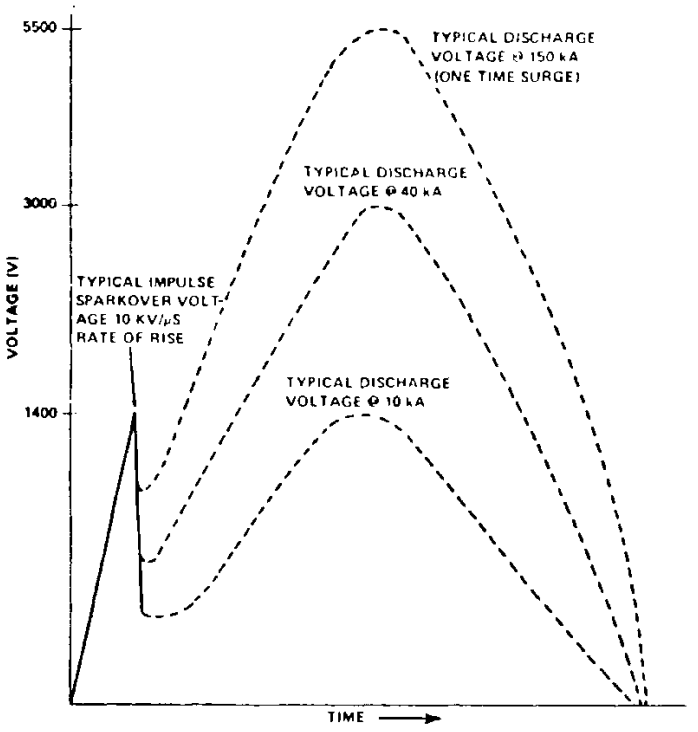

Figure 1-38. Typical Operating Curve for Two Series of Gas-Filled Spark Gap Arresters with Nonlinear Series Resistor

(3) Summary. In summary, the gas-filled spark gap is capable of discharging high-amplitude transients, but has a relatively slow response time and a relatively high discharge voltage. Follow current (10 to 80 amperes typical) occurs, but normally presents no significant problems. Figure 1-38 depicts typical operating curves for two series of gas-filled spark gap arresters with a series-connected silicon carbide resistor.

b. ZNR and MOV type arresters. The ZNR type arresters have several desirable characteristics. Other types of MOV arresters are currently under development that have voltage-current characteristics similar to the ZNR type. The ZNR type arresters have a relatively fast turn-on time (50 nanoseconds or less), low turn-on voltage, relatively low clamping voltage, and various levels of current dissipation capability since the ZNR types are available in different energy level packages. Table 1-13 lists related characteristics for ZNR available in one type of energy level package, and Table 1-14 lists related characteristics for a high-energy level package.

Table 1-13. ZNR Type Devices (Molded Case Type) Typical Characteristics

Parameter	Range of Available Devices		
	20 mm Disc	25 mm Disc	32 mm Disc
DC Breakdown Voltage at 1 Milliampere	200 to 910 volts	200 to 910 volts	200 to 910 volts
Maximum Clamping Voltage at Maximum Surge Current	525 to 2800 Volts	590 to 3200 Volts	640 to 3800 Volts
Maximum Surge Current (8 x 20 Microsecond Waveform)	2.5 to 5 kA	5 to 10 kA	10 to 20 kA
Life	Depends on Surge Current and Waveform*		

*Maximum surge current (8 x 20 microseconds) can be applied twice without incurring damage or over stressing the devices.

Table 1-14. High Energy ZNR Surge Arrester Typical Characteristics

Size:	Three 80 m m Discs in Parallel	
Powerline Voltage:	250 V AC Maximum	
DC Breakdown Voltage at 1 Milliampere:	560 Volts	
Maximum Clamping Voltage: (10 x 20 Microseconds)	Current	Clamping Voltage
	10 kA	1300 volts
	40 kA	1600 Volts
	150 kA	2450 Volts

Table 1-15. Test Results for Parallel-Connected ZNR

Number of Surges Applied	Surge Amplitude	Clamp Voltage (Peak)
2000	250A @ 1000V	300V
2500	400A @ 1600V	315V
225	20,000A @ 8.75kV	500V
25	40,000A @ 16.8kV	650V
8	50,000A @ 20kV	700V

(1) Current dissipation. Testing has established that connection of the devices listed in Table 1-13 in parallel for line-to-ground or line-to-line protection is feasible. Use of the ZNR in parallel provides increased current dissipation capability and a lower maximum clamping voltage than a single, high-energy ZNR can provide. Five of the devices were connected in parallel and surged as listed in Table 1-15. The clamp voltages listed in Table 1-15 occurred. Current division was very good.

(2) Turn-on. Although the ZNR devices used in ZNR-type arresters are not solid-state junction-type devices, the arrester acts very much like junction-type devices. That is, when breakdown voltage is reached, transition from off to on occurs very rapidly as shown in Figure l-39b which is a typical operating curve for a ZNR. Since the devices used in ZNR-type surge arresters are essentially nonlinear resistors, resistance decreases rapidly as applied voltage across the device increases above breakdown voltage. Therefore, current flow through this type of arrester increases rapidly after breakdown as shown in Figure l-39b. Primarily because of resistance and capacitance of the ZNR, the clamp voltage slightly lags the transient current waveform. The ZNR-type arrester automatically restores to the off state when applied voltage falls below turn-on voltage. Therefore, no follow current occurs during the turn off phase.

c. Solid-state type arresters. So many different types of solid-state arresters are currently manufactured that it is difficult to generally evaluate them. In general, solid-state arresters manufactured by connecting silicon avalanche diode suppressors (SAS) in series to attain the desired current handling capability have truly fast response times of 1 to 10 nanoseconds. However, this type of arrester is generally limited to handling approximately 500 amperes surge current (waveform 8-by-20 to 8-by-40 microseconds). Figure 1-39a is a typical operating curve for a solid-state suppressor. This type of arrester also has a low clamp voltage (normally 160% of breakdown voltage, maximum) compared to other types of arresters. Other solid-state arresters are a combination of silicon avalanche diodes or rectifier diodes connected in a bridge network followed by a second stage consisting primarily of a silicon-controlled rectifier (SCR) with a varying-value current-limiting resistor in series with the SCR. This type arrester has a slow response time, sometimes approaching 1 microsecond, because of the slow turn-on time for the SCR. Also, the clamping voltage can be

high depending on the value of the SCR current-limiting resistor. Because of the proliferation of solid-state arresters available, it is strongly recommended that complete laboratory demonstration testing be required prior to implementation of the solid-state arresters.

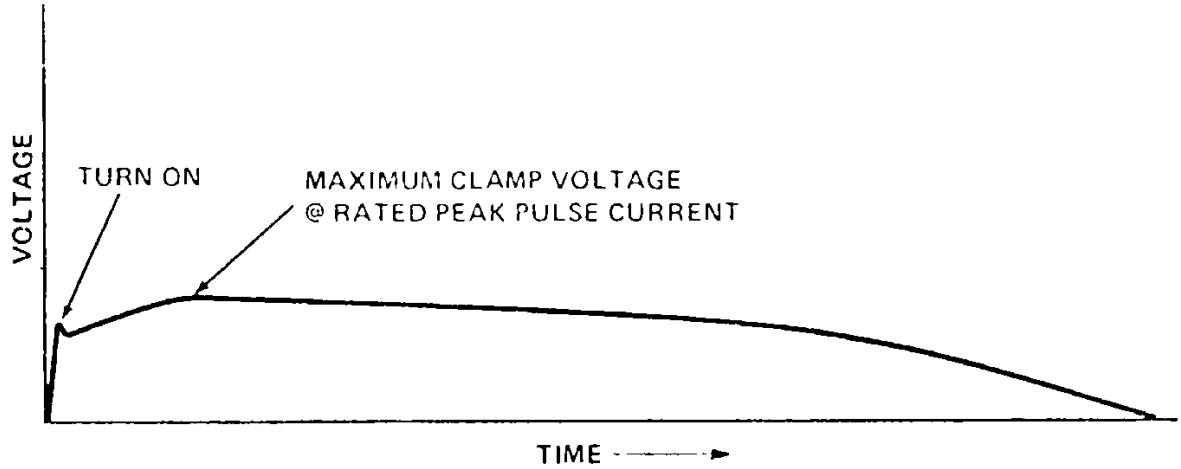

a. TYPICAL OPERATING CURVE FOR SILICON AVALANCHE SUPPRESSOR

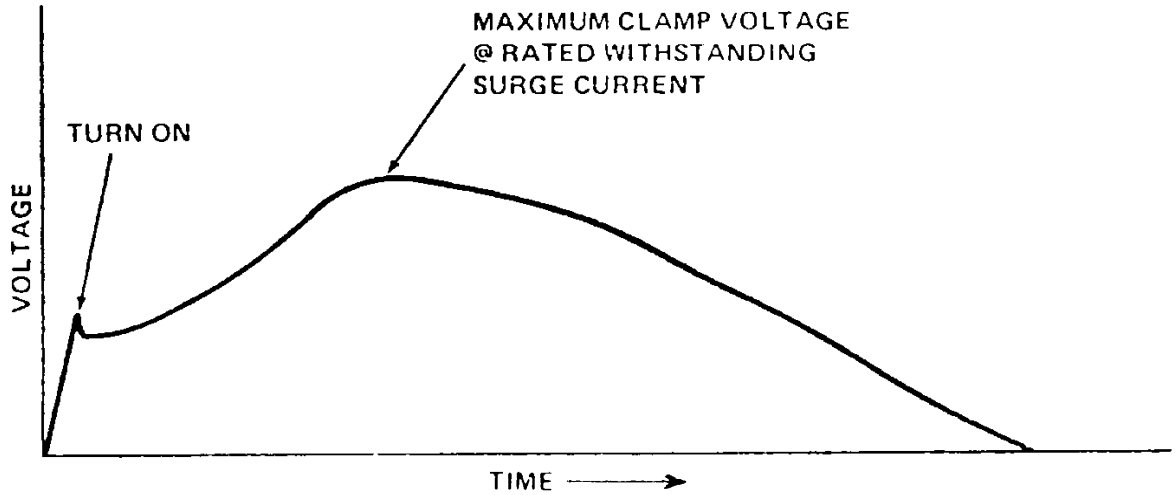

b. TYPICAL OPERATING CURVE FOR ZNR SUPPRESSOR

Figure 1-39. Typical Arrester Operating Curves, ZNR and SAS

d. Hybrid type arresters. Hybrid type arresters are currently in development that consist of a combination of gas-filled spark gaps and ZNR or MOV, and two-stage arresters consisting of a solid-state stage for dissipation of low-energy-content transients and a separate stage for dissipation of high-energy transients consisting of gas-filled spark gaps and ZNR or MOV. The two stages are separated by a very low dc resistance choke so that the low-energy dissipation stage fires first to achieve fast response time. When sufficient voltage develops across the choke, the high energy dissipation stage turns on and dissipates the high level transient energy. Insufficient data currently exists to support analyzing the hybrid type arresters. A hybrid should emerge that effectively utilizes the best characteristics of available devices, (e. g., the fast turn-on and low clamping voltage characteristics of silicon avalanche diode suppressors and the high current dissipation capability of ZNR or MOV and gas-filled spark gaps).

1.3.3.5.16 Transient Protection for Externally Exposed Equipment Lines. In order to effectively protect equipment against damage from lightning generated transients on externally exposed (outside) equipment lines, the following must have some definition which is provided in subsequent paragraphs.

a. Frequency of Transient occurrence.

b. Amplitude and Waveform of Occurring Transients.

c. Equipment Withstand Levels.

d. Protection Methods Against Transients.

1.3.3.5.17 Frequency of Transient Occurrence. There is no existing method for precise calculation of the number of lightning generated transients that will occur at a specific location in a given period of time. However, by using the best available data listed in Section 1.3.3.5.4, projections are that 1750 transients will occur in a 10-year period at a facility located in a high-lightning incident area with an average of 100 thunderstorm days per year, and only 175 transients will occur in a 10-year period at a facility in a low-incident lightning area with an average of 10 thunderstorm days per year. Note that the number of transients is decreased by one order of magnitude for the low-lightning incident area. Therefore, by using Figure 1-34 to determine the average number of thunderstorm days per year in a specific location, and decreasing 1750 by 10% for each 10 decrease in the average number of thunderstorm days per year, the number of transients projected to occur at any location in the United States can be determined.

Table 1-16. Transients Projected to Occur on Externally Exposed Line in High-Lightning Incident Area Over 10-Year Period

No. of Transients	Percentage	Peak Voltage (Volts)	Peak Current (Amperes)
2	0.1	750 to 1,000	750 to 1,000
15	0.9	500 to 749	500 to 749
18	1	400 to 499	400 to 499
53	3	300 to 399	300 to 399
140	8	200 to 299	200 to 299
332	19	100 to 199	100 to 199
420	24	50 to 99	50 to 99
403	23	25 to 49	25 to 49
367	21	5 to 24	5 to 24

Note: The source impedance for design purposes is assumed to be 1 ohm.

1.3.3.5.18 Amplitudes and Waveforms of Occurring Transients. Transients occurring on landlines have been defined as 10-by-1000 microsecond, 1000-volt peak pulses where 10 microseconds is the time from the start of the transient to peak voltage, and 1000 microseconds is the time from the start of the transient until the amplitude exponentially decays to 50% of peak value. Source impedance cannot be precisely defined but for design purposes is assumed to be 1 ohm. Therefore, for design purposes, a typical worse case lightning-induced transient can be defined as 10-by- 1000 microseconds, 1000 volts peak with a peak surge current of 1,000 amperes. Using Table 1-8, the 1750 transient pulses defined in Section 1.3.3.5.17 and the worst case transient pulse defined above, the number of transients of varying amplitude would be as listed in Table 1-16 over a 10-year period for an externally exposed line in a high-incident lightning area (average of 100 thunderstorm days per year).

1.3.3.5.19 Equipment Withstand Levels. Equipment withstand levels were generally defined in Section 1.3.3.5.3. Nothing of substance can be added. However, manufacturers generally do not specify equipment or component withstand levels against lightning generated transient surges. It is imperative that the withstand level be analyzed and determined for each item of equipment to be protected. The withstand level should be 10% below both the damage threshold level and operational upset level for the equipment. The damage threshold level is defined as the level where immediate component destruction occurs or the repeated application energy level that decreases useful operating lifetime of equipment components, whichever is lower. The operational upset level is defined as the transient voltage that causes an intolerable change in equipment operation. It is imperative that an accurate withstand level be established. Otherwise, designed transient suppression may not be effective, or conversely, costly transient protection may be designed when not required.

1.3.3.5.20 Protection Methods Against Transients. Methods listed below are effective, when properly implemented, in providing equipment protection against lightning generated transients appearing on externally-exposed equipment signal, status, control and ac and dc intrafacility lines. Subsequent paragraphs delineate proper implementation techniques for the listed methods.

a. Completely enclosing buried lines end-to-end in ferrous metal, watertight conduit.

b. Installation of buried guard wire above buried cable runs not in metal conduit.

c. Connecting transient suppressors line-to-ground on both ends of externally exposed equipment lines as soon as feasible after building penetration or at point of termination at exterior equipment.

d. Including transient suppressors or transient suppression circuits as an integral part of protected equipment at all external line-equipment interfaces.

e. Peripherally bonding the shields of rf coaxial lines to building entry plates by use of bulkhead connector plates.

1.3.3.5.21 Enclosing Cable Runs in Ferrous Metal Conduit. Transients are induced on external lines by electromagnetic waves created by lightning current flow, and by cloud-to-cIoud lightning discharges. Therefore, completely enclosing buried external cable runs in ferrous metal, watertight, electrically continuous conduit provides an effective protection level against lightning-generated transients.

a. Cost considerations. When a buried cable run is 90 meters (300 feet) or less in length, it is economically feasible to enclose the cable run end-to-end in metal conduit. When the cable run exceeds 90 meters (300 feet), it is normally more economically feasible to provide transient suppression at building penetration and equipment level than to install the conduit. However, use of metal conduit provides effective protection against induced transients, regardless of the length of the cable run. The conduit must extend from building penetration to building penetration, or building penetration to exterior equipment termination.

b. Grounding of conduit. To be effective, the conduit must be electrically continuous and effectively bonded to earth ground at each end. If building entry plates are available the conduit should be peripherally welded. NO. 2 AWG bare copper stranded cable is suitable for the earth ground connection, and exothermic welds provide effective bonding underground. Approved pressure connectors are suitable for use above ground. For runs over 90 meters (300 feet), the conduit should be connected to earth ground at each end and every 30 meters (100 feet). The structural steel of antenna towers may be used to effectively ground the conduit provided the total bond resistance from the conduit to the earth electrode System is 5 milliohms or less.

c. Transient suppression for lines in metal conduit. Only one level of transient suppression is required for exterior line/equipment interfaces to provide effective protection against induced transients conducted by lines in metal conduit. The one level of suppression may be located at building penetration or designed as an integral part of the applicable equipment. The one level of suppression may consist of a single suppressor connected line to ground, or two resistors connected in series with the external line input and a silicon avalanche diode connected between the junction of the two resistors and earth ground or equipment case ground, depending on location of the transient suppression.

d. Amplitude of transients on external lines enclosed in metal conduit. The number of lightning generated transients occurring on external cables will not change as a result of enclosing cable runs in metal conduit. However, the voltage and current amplitudes will decrease a minimum of 90%. Therefore, Table 1-16 can be used to determine the number and amplitude (voltage and current) of transients that are projected to occur on externally exposed lines, enclosed in metal conduit, in high-lightning incident areas.

1.3.3.5.22 Transient Suppression. In order to provide effective equipment protection against lightning generated transients, externally exposed lines must have transient suppression installed on each end where the line directly interfaces electrical/electronic equipment. This requirement applies in all cases when the withstand level of the interfaced equipment is below the transient levels projected to occur at the line/equipment interface. As previously noted, transient amplitudes projected to occur on lines enclosed end-to-end in electrically continuous, ferrous metal conduit are only 10% of the transient amplitudes projected to occur on lines not enclosed in metal conduit (Table 1-16). Primarily because of insertion losses and impedance mismatch, transient suppression is not currently available that is satisfactory for installation on externally exposed rf coaxial lines at building penetration when the lines carry signals above 3 MHz in frequency. Therefore, all protection for these line/equipment interfaces must be designed as an integral part of the equipment. The most effective design for equipment protection is provided by installing a high energy level transient suppressor at building penetration (on all lines that carry signals 3 MHz or less in frequency) connected line to earth ground, and including low-energy suppression as a part of integral equipment design. Figure 1-40 depicts typical transient suppression at the facility and equipment level for both coaxial cables and single wires or pairs. Suppressors installed at building penetration should be located in the junction box that first terminates the externally exposed lines after building penetration.

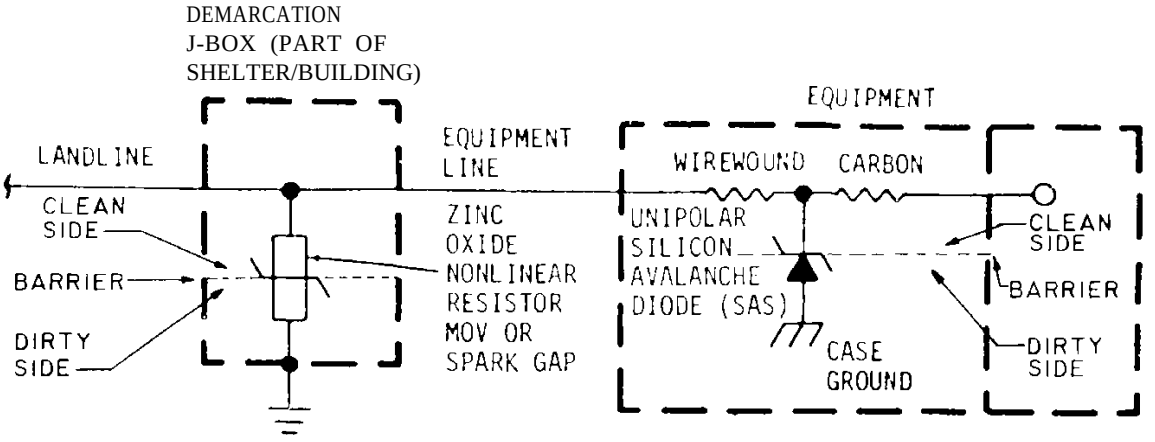

NOTE : SAS MAY BE UNIPOLAR OR BIPOLAR DEPENDING ON LINE VOLTAGE

a. TYPICAL TRANSIENT PROTECTION CONFIGURATION

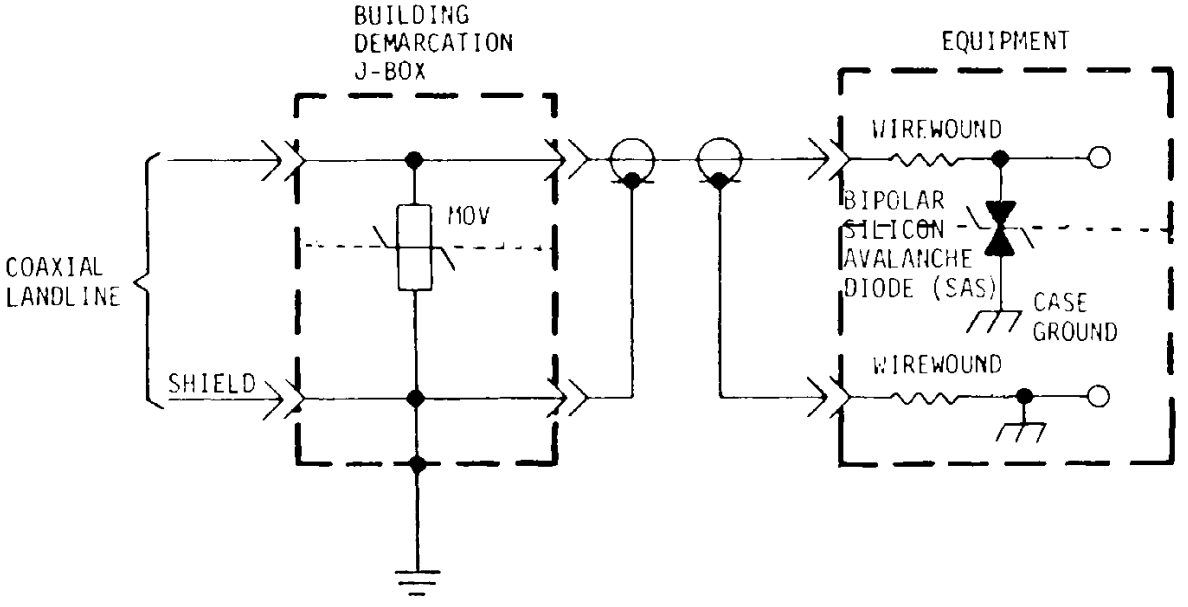

NOTE : TRANSIENT PROTECTION FOR SHIELD REQUIRED ONLY WHEN SHIELD IS NOT GROUNDED AT EQUIPMENT

b. TRANSIENT PROTECTION FOR EXTERNALLY-EXPOSED COAXIAL CABLES

Figure 1-40. Typical Transient Suppressor Installation, Facility and Equipment Level

a. Grounding for transient suppression. In order for the transient suppression to operate properly and provide optimum equipment protection, the ground side of the transient suppressor must be connected as directly as possible to ground. The ground for the high-energy level suppressor must be connected directly to the nearest J-Box wall.

b. Suppressor installation. Suppressors can be installed between applicable terminal boards and the ground with short direct connections. Maintaining short lead lengths is important to prevent inductance of long lead lengths from delaying turn-on and response of the transient suppressors.

1.3.3.5.23 Types of Available Transient Suppressors. Three different types of suppressors are available to provide transient protection as listed below. Operating characteristics for each type are provided in subsequent paragraphs, followed by desirable operating characteristics.

a. Zinc oxide nonlinear resistor (ZNR) or metal oxide varistor (MOV).

b. Silicon avalanche diode suppressor (SAS).

c. Gas-filled spark gap.

1.3.3.5.24 Operating Characteristics of Transient Suppressors.

a. Characteristics of ZNR-type suppressors.

(1) Response time: 50 nanoseconds or less, any risetime.

(2) Clamping voltage: 225% of breakdown voltage maximum for surge currents projected.

(3) Breakdown voltage: 22 V dc to 1800 V dc at 1 milliampere.

(4) Standoff voltage: 14 V dc to 1599 V dc.

(5) Surge current dissipation: 500 to 2000 amperes, 8-by-20 microsecond waveform.

(6) Lifetime: Variable, depends on amplitude of surge current, satisfactory for 10-year protection, projected.

b. Characteristics of SAS-type suppressors.

(1) Response time: 1 nanosecond or less, any risetime.

(2) Clamping voltage: 165% of breakdown voltage maximum at rated peak pulse current.

(3) Breakdown voltage: 6.8 V dc to 200 V dc at 1 milliampere.

(4) Standoff voltage: 5.5 V dc to 200 V dc.

(5) Surge current dissipation: Peak pulse current ratings from 139 amperes for 6.8 V dc suppressor to 5.5 amperes for 200 V suppressor for 10-by-1000 microsecond waveforms.

(6) Lifetime: Not presently defined. Requires current-limiting resistor in series with protected line to provide required surge current dissipation at facility level.

c. Characteristics of gas-filled spark gap suppressors.

(1) Response time: 3 to 5 microseconds for 10-by-1000 microsecond waveforms.

(2) Clamping voltage: Arc voltage is 20 volts typical.

(3) Breakdown voltage: 300 to 500 volts typical.

(4) Standoff voltage: 75 V dc to 1000 V dc.

(5) Surge current dissipation: 5,000 amperes for 10-by-50 microsecond waveform.

(6) Lifetime: Varies depending on surge current amplitude, 50 surges of 500 amperes peak current with 10-by-1000 microsecond waveform typical.

1.3.3.5.25 Transient Suppressor Packaging Design. Packaging of transient suppressors for standard wires and twisted shielded pairs is not critical. Leads should be as short as feasible to enable short, direct connections without bends. Transient suppressors for coaxial and twinaxial lines should be contained in a metal and epoxy package with appropriate connectors on each end, one male, and one female, to permit inline installation at the connector panel in the demarcation junction box. Two suppressors must be included in all twinaxial protector packages.

1.3.3.5.26 Coaxial Cable Shield Connection Through an Entrance Plate. Effective transient protection can be provided by peripherally bonding each rf coaxial cable to a metal bulkhead connector which in turn is peripherally bonded to the building entry plate and grounded to the earth electrode subsystem. This scheme will route transient currents from cable shields to earth ground instead of through terminating equipment to ground.

Also, transient surge currents will be shunted to ground before transient energy is cross-coupled to other equipment lines in the facility. The entry plate should be a minimum of 0.64 cm (1/4-inch) thick, and constructed of steel. The entry plate must contain the required number of appropriate coaxial feedthrough connectors to terminate all applicable incoming lines. The connectors must also provide a path to ground for connected cable shields. If external and internal coaxial cables are of a different physical size, the changeover in connector size should be accomplished by the feedthrough connectors of the entry plate. The entry plate should be connected to the earth electrode subsystem with a 1/0 AWG (minimum) insulated copper cable. The cable should be bonded to the entry plate and the earth electrode subsystem with exothermic welds.

1.3.3.5.27 Grounding of Unused Wires. A11 unused wires/pairs of Communication cable runs should be connected to ground at each end. This action will reduce transients on the unused lines which otherwise could be coupled to in-service lines of the cable.

1.3.3.5.28 Transient Suppression for RF Coaxial Lines. At the present time, effective transient suppressors for connection from line-to-ground at building penetration for externally exposed rf coaxial lines carrying signals above the 3 MHz range are still in the development stage, primarily because of insertion losses. The best method for protecting the lines at present is end-to-end enclosure in ferrous metal conduit, and providing transient suppression as an integral part of using equipment.

1.3.3.5.29 Equipment-level Transient Suppression. Equipment-level transient protection is discussed in paragraph 1.3.3.7 of this chapter. In general, effective protection is provided by low-value resistors in series with external line inputs, and silicon avalanche diode suppressors connected line-to-ground. Suppressors are currently available as special order items that are suitable for connection line-to-ground on rf lines carrying signals up to 500 MHz. The suppressors consist of a spark gap, a silicon avalanche diode suppressor in parallel with an rf choke, or a combination ZNR and rf choke.

1.3.3.6 Lightning Generated Transient Protection Evaluation. This portion of the procedure is performed to determine whether effective and adequate transient suppression is provided for protection against damage from lightning-generated transients. The procedure consists of a detailed review of facility drawings and a detailed visual inspection.

a. Facility drawings. Review facility drawings required to determine the following. Sketch items of interest to aid in subsequent visual examination.

(1) Are lightning protectors installed on the primary and secondary of commercial ac service transformer(s)?

(2) Are buried, incoming ac power service lines enclosed in watertight, ferrous metal conduit connected to earth ground at the service transformer and to the earth electrode subsystem at the facility end? Is No. 2 AWG (minimum) bare, stranded copper wire used for earth ground connections?

(3) Are overhead incoming ac power service lines protected by an overhead guard wire from the service transformer to the facility service entrance? Is the guard wire connected to earth ground at each end? Does the guard wire provide a 1:1 cone of protection for the incoming service lines?

(4) Is an ac surge arrester installed at the facility main service disconnect means (each main disconnect if more than one)? Note manufacturer and part number on sketch.

(5) Are the external landlines and lines which terminate at exterior equipment (including rf coaxial lines that connect to facility equipment) enclosed in watertight, ferrous metal conduit if the cable runs are 90 meters (300 feet) or less in length? Is the conduit connected to the applicable earth electrode subsystem at each end?

(6) Do buried landlines (more than 90 meters (300 feet) in length and not enclosed in ferrous conduit) have a guard wire installed end-to-end in the cable trench? Is the guard wire connected to the earth electrode subsystem at each end?

(7) Are all rf coaxial cables grounded to the metal bulkhead connector plate at building penetration?

(8) Are transient suppressors or transient suppression circuits installed line-to-ground on each end of all exterior lines not enclosed in ferrous metal conduit (except rf lines carrying signals above 3 MHz) at first termination after building penetration?

b. Inspection. A survey form in Section 2.2.2.4, Part II, is provided for guidance in accomplishing a thorough visual inspection. Detailed written notes fully describing all noted deficiencies should be made.

c. Corrective action. Specific corrective action to accomplish in response to each noted deficiency is difficult to detail. For instance, cable runs less than 90 meters (300 feet) in length are not normally enclosed end-to-end in electrically continuous, watertight, ferrous metal conduit. Intensity and incidence of lightning in the immediate area, together with economic feasibility and operational requirements, are normally the overriding factors in determining whether the installation of metal conduit is justified and feasible. In most cases, for the example cited, installation of transient suppression circuits on each end of externally exposed equipment lines is the most feasible solution. However, installation of transient suppression directly at the line-equipment interface may also be warranted, depending on equipment susceptibility and lightning incidence. Consider each deficiency individually. Refer to Sections 1.3.3.5 and 1.3.3.7 as required, and correct deficiencies in the most feasible manner. Some typical and required corrective actions are listed below:

(1) If a secondary ac surge arrester is not installed at the facility, and there is any history of lightning incidence in the area, install a surge arrester on the line or load side of the main service disconnect means. Refer to Section 1.3.3.5 to determine that the surge arrester selected will be adequate and effective.

(2) If the surge arrester and transient suppressor does not have a low-impedance, effective path to earth ground, take whatever action is necessary to provide effective grounding. Neither the arrester nor suppressor will provide effective transient protection if an effective ground is not available.

(3) If no transient suppressors are installed on externally exposed equipment lines not enclosed end-to-end in metal conduit, and the lines interface susceptible equipment, as a minimum install transient suppressors on each end of each line that interfaces susceptible equipment. Refer to Sections 1.3.3.5 and 1.3.3.7 as required.

1.3.3.7 Transient Protection.

1.3.3.7.1 Protection Requirement. Individual items of electrical and electronic equipment that directly interface any externally exposed equipment lines, including commercial ac, may require transient protection that is designed as an integral part of the equipment. Whether or not protection is required is dependent on the damage susceptibility of the equipment of interest, the level of transient suppression provided on externally exposed lines at building penetration or external equipment termination and the level of transient energy that is projected to be conducted to the equipment. For use herein, externally exposed lines are defined as lines exposed to outside weather elements and environmental conditions. The lines may run overhead, run along grade surface, or be buried in earth. Included are ac power input lines and signal, control, status, and intrafacility powerlines. The lines are commonly referred to as landlines. Transient protection is not required in equipment when an interfaced landline is fiber optic in lieu of a metallic line. In order to provide effective transient protection, the damage (withstand) level for the equipment must be determined, and the amplitude and number of transients that will be conducted to the equipment must be known. This information is provided in this section. Three areas of equipment circuitry normally require transient protection, and are listed below:

a. The ac power input.

b. Where other externally exposed lines interface with the equipment.

c. Rectifier outputs of 5 to 48 V dc power supplies that operate from commercial ac power and supply operating power for solid-state equipment.

1.3.3.7.2 Transient Definition. The waveform and amplitude of transients that may appear on commercial ac input lines and other landlines connected to equipment are provided in this paragraph.

a. AC powerline transients. The number and amplitude of lightning generated transients projected to occur on ac power inputs to equipment over a 10-year period are listed in Tables 1-17 and 1-18. The waveform for the transients is 8-by-40 microseconds where 8 microseconds is the risetime from zero to peak amplitude, and 40 microseconds is the time from the start of the transient until exponential decay to 50% of peak value. The transients listed are based on the data in Section 1.3.3.5. The transients listed in the two tables represent clamp voltages that will appear across equipment by the facility secondary ac arrester installed at the main service disconnect means (see Section 1.3.3.5) when discharging transient surges. Voltages and currents actually appearing across protected equipment will necessarily be related to the amounts and type of equipment operating from power supplied by the main service disconnect means.

Table 1-17. Transient Surges, Line-to-Ground, Expected to Appear Across Equipment by Secondary AC Surge Suppressor Over a 10-Year Period

Surge Current Amplitude (8-by-40 µs)	Number of Surges
1.5 kV, 100 A	1,500
2 kV, 200 A	700
2.5 kV, 300 A	375
3 kV, 500 A	50
3.5 kV, 1 kA	5
4 kV, 1.5 kA	2
4.5 kV, 2 kA	1

Table 1-18. Transient Surges, Line-to-Line, Expected to Appear Across Equipment by Secondary AC Surge Suppressor Over a 10-Year Period (Ungrounded Service Only)

Surge Current Amplitude (8-by-40 μs)	Number of Surges
500 V, 50 A	1,000
750 V, 100 A	100
1 kV, 200 A	50
1.5 kV,300A	10

b. Landline transients. The number and amplitude of transients projected to be conducted to each landline equipment interface are listed in Table 1-19. The waveform for the transients is 10-by-1000 microseconds where 10 microseconds is the risetime from zero to peak amplitude for the transient, and 1,000 microseconds is the time from the start of the transient until exponential decay to 50'% of peak amplitude. The information presented in Table 1-19 is based on data contained in Section 1.3.3.5. Since an equipment designer will not normally know whether external lines will be enclosed in ferrous metal conduit, different transient amplitudes are not provided in Table 1-19 for external lines enclosed in metal conduit.

1.3.3.7.3 Determination of Equipment Damage (Withstand) Levels. Manufacturers do not normally specify withstand levels for components. Therefore, an analysis should be performed to determine the withstand level for each item of equipment that directly interfaces any externally exposed lines including ac input lines. Transients that are projected to be conducted to equipment are provided in Tables 1-17, 1-18, and 1-19. The analysis should be based either on results of laboratory tests or engineering analysis. Also the analysis must include all equipment circuitry that will be exposed to transients. Three factors determine the withstand level for the equipment as follows:

a. Component destruction level. The component destruction level is the transient energy level that either causes immediate component destruction or degrades component operation to a point so that useful operation cannot be achieved. This energy level is not usually specified or controlled by the manufacturer.

b. Shortened component operating life. Useful component operating life can be appreciably shortened by repeated overstressing of components. The overstressing occurs as a result of repeated application of some level of transient energy. This energy level may be difficult in some cases to determine, but is certainly meaningful when designing protection against transients.

Table 1-19. Transient Surges Projected to Occur in 10-Year Period on Externally-Exposed Landlines

Peak Amplitude Number of Surges	(Voltage and Current)
1,000	100 V, 50 A
500	500 V, 100 A
50	750 V, 375 A
5	1,000 V, 1,000 A

c. Operational upset level. The operational upset level is the transient energy level that causes a change in the equipment operating state. Since a change in the equipment operating state will normally create an intolerable change in associated system operation, transient protection must ensure that transient energy levels appearing across protected equipment do not cause operational upset.

To establish the equipment withstand level, compare the transient energy levels that cause immediate component destruction, component overstressing, or equipment operational upset. Select the lower of the three transient energy levels, and establish the withstand level at 10% below the lowest transient energy level.

1.3.3.7.4 Determination of Need for Transient Protection. Power supplies (5 to 48 V) operating from ac inputs and supplying operating power for solid-state equipment always require internal transient protection. Other equipment that directly interfaces externally exposed lines, including commercial ac inputs, may or may not require transient protection designed as an integral part of the equipment. To determine whether transient protection is required, compare the equipment withstand level with the transients of Table 1-17, 1-18, or 1-19, as applicable. If the equipment withstand level is above the transient amplitudes provided in the tables, equipment-level transient protection is not required. When the transient amplitudes are above the equipment withstand level, equipment-level transient protection is required, either at the ac input, other externally-exposed line-equipment interfaces, or both.

1.3.3.7.5 Minimizing Transient Damage. When equipment requires protection against lightning generated transient damage, transient suppression design must ensure that transients are attenuated to the equipment withstand level prior to entering any equipment component. Therefore, the transient suppression must be effective at the external line-equipment interface.

a. New equipment.

(1) AC inputs. The most feasible method for providing transient suppression is to design the suppression as an integral part of the equipment.

(2) Other external line interfaces (dc to 3 MHz). The most effective method for providing transient suppression is to design low-energy level transient suppression as an integral part of the equipment and specify that high-energy level transient suppression, of a design provided by the manufacturer, be installed on applicable lines in cable demarcation junction boxes at building penetration or exterior equipment termination. Total transient suppression may be designed as an integral part of the equipment but caution must be exercised to ensure that a separate, dedicated path to earth ground be provided for the high-energy level dissipation section of the transient suppression.

(3) External line interfaces (above 3 MHz). All transient suppression must be designed as an integral part of the applicable equipment. This is necessary because effective suppression devices/circuits are not currently available for in–line installation on rf lines above 3 MHz, primarily because of high insertion losses. If useable, effective high-energy level suppression becomes available in the future, the most effective transient protection can be realized by installing high-energy level suppression on applicable lines at a metal bulkhead connector plate at building penetration and including low-energy transient suppression as a part of the equipment.

b. Existing equipment. The most effective transient protection can be provided as described in a(l), (2), and (3) above. When room is not available in the existing equipment to add required transient suppression components, the components can be installed in a small enclosure affixed to the chassis or cabinet rack for all except rf lines that carry rf signals above 3 MHz.

1.3.3.7.6 AC Power Input. The clamp voltage, appearing across protected equipment by the secondary ac surge arrester installed at the facility main service disconnect means, when dissipating a transient surge, may be higher than the withstand level for the equipment. Therefore, effective transient suppression must be designed as an integral part of the equipment.

a. Transient suppression design. To provide effective protection, equal suppression must be installed line-to-ground on each service conductor input and the neutral input. For floating (ungrounded) line-to-line power inputs, line-to-ground suppression must be installed and line-to-line suppression is optional. Suppressors installed at the equipment power input should have a slightly lower turn-on voltage and a slightly faster response time than suppressors of the secondary ac surge arrester at the main service disconnect means. This permits the suppressors integral to the equipment to clamp short-duration overshoot voltage that occurs before the secondary ac surge arrester can turn on and clamp in response to a transient. Also, with a lower turn-on voltage, the suppressors at the equipment will nave a lower clamp voltage for a given transient surge than the secondary arrester and thus provides optimum equipment protection. However, with the specified characteristics, the surge suppressors at the equipment will tend to dissipate the occurring transient before the secondary arrester turns on. Therefore, it is imperative to have an inductor or a minimum 10 foot cable added in series with the input line. If the inductor is properly chosen, the secondary surge arrester may then turn on very rapidly after the equipment suppressor(s) turn on because of the voltage increase across the inductor. The voltage increase is caused by current drain through the equipment suppressors to ground. Figure 1-41 depicts a typical suppression circuit for use at the equipment level on ac inputs with a neutral. Figure 1-42 depicts a typical suppression circuit for use on ungrounded (line-to-line) inputs.

b. Components.

(1) Inductor L1. The inductor Ll, shown in Figures 1-41 and 1-42, is necessary to provide a voltage increase to cause the secondary ac surge arrester at the main service disconnect means to turn on very rapidly when suppressor RV1 turns on and conducts transient current to ground. The inductor must be capable of safely passing normal operating voltages and current, and current resulting from 130% overvoltage for a period of 50 milliseconds. Also, the inductor must:

(a) Have a very low dc resistance.

(b) Present a high impedance to transient surges.

(c) Present a very low impedance to 60 Hz line voltage.

(d) Be capable of safely passing the transient current listed in Table 1-17.

(2) Suppressor RV1. Figure 1-41 shows RV1 as a metal oxide varistor (MOV) because the zinc oxide nonlinear resistor type of MOV is especially well suited for this particular application. Other types of MOV are constantly being upgraded and are now possibly suitable for use. Other devices are also suitable for use, and, in some cases will be required. Silicon avalanche diodes are effective for use in protecting very susceptible equipment. Data for different type suppressor are provided in Section 1.3.3.5. Use of a gas-filled spark gap for use at the location of RV1 is not recommended for two reasons.

(a) Available gas-filled spark gaps with the required current handling capability have a relatively high sparkover (turn-on) voltage and relatively slow turn-on times. Therefore, if spark gaps are used for transient suppression at ac inputs, additional suppression including inductors, MOV and/or silicon avalanche diode suppressors must be added to provide required protection.

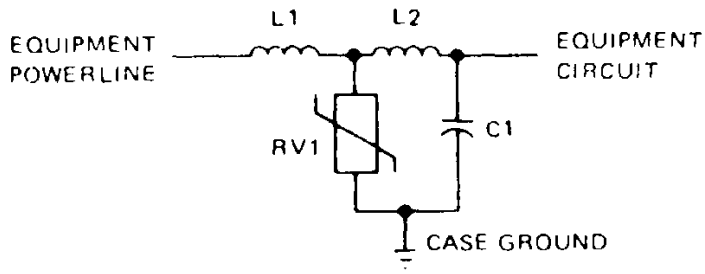

a. TYPICAL TRANSIENT SUPPRESSION FOR HOT AC INPUT TO EQUIPMENT

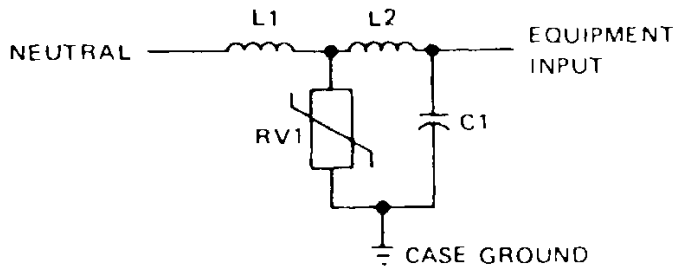

b. TYPICAL TRANSIENT SUPPRESSION FOR NEUTRAL AC INPUT TO EQUIPMENT

Figure 1-41. Typical Configuration for Protection of Equipment from Conducted Powerline Surges and Transients (Neutral Grounded)

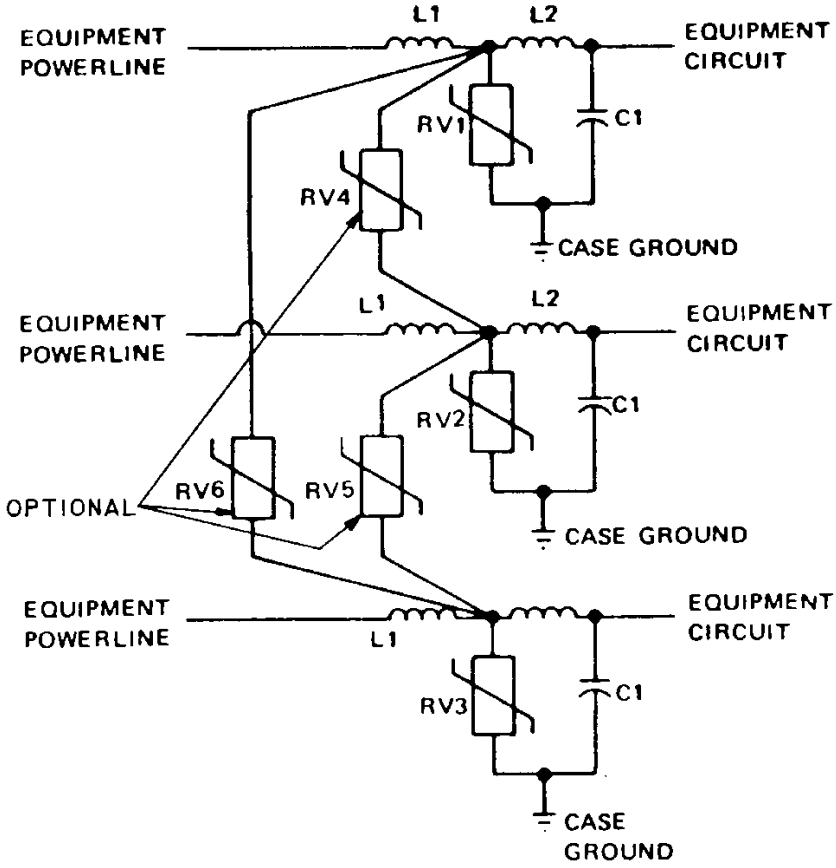

Figure 1-42. Typical Configuration for Protection of Equipment from Conducted Powerline Surges and Transients (Ungrounded)

(b) Arc voltage for spark gaps is a nominal 20 to 30 volts. Therefore, when the transient occurs causing the spark gap to turn on, normal line voltage is interrupted which will usually cause operational upset of the affected equipment. Also, since the arc voltage is only 20 volts and is across a 120-volt supply, the spark gap will likely remain in the arc mode of operation and draw current until the supply voltage waveform crosses zero or until the supply circuit breaker opens. It is likely that the spark gap will be destroyed before the supply circuit breaker opens. Either condition is very undesirable.

(3) Inductor L2 and capacitor Cl. These two components form an LC network to filter out high frequency components of transient surges and are required only for equipment susceptible to high frequency, very short duration (less than 1 nanosecond) transient pulses that might pass across RV1.

c. Transient suppression grounding. When at all feasible, transient suppressor grounds should be directly bonded to case ground. When the direct bond is not feasible, the suppressor grounds must be connected as short and direct as possible to case ground, and the case must have a low bond resistance to earth ground. Otherwise, the suppressors cannot operate properly.

d. Functional characteristics. Functional characteristics for transient suppression at the ac input-equipment interface must be as follows for effective transient suppression.

(1) Voltage characteristics. The operating (reverse standoff) voltage must be between 200 to 300 percent of the normal line voltage for gas-filled spark gap suppressors. For MOV, ZNR, and SAS type suppressors, the reverse standoff voltage should be 175 ± 25 percent of the normal line voltage. Turn-on voltage, discharge (clamp) voltage and the a amplitude and time duration of any overshoot voltage must be sufficiently low to preclude equipment damage or operational upset.

(2) Leakage current. Leakage current for each suppression component at reverse standoff voltage must not exceed 100 microamperes.

(3) Self-restoring capability. The surge suppressors must automatically restore to an off state when transient voltage falls below turn-on voltage for the suppressor.

(4) Operating lifetime. Equipment transient suppression must be capable of safely dissipating the number and amplitude of surges specified in Table 1-17 or 1-18 as applicable. Clamp voltage shall not change more than l0 percent over the operating lifetime.

(5) In-1ine devices. Only inductors designed to have low dc resistance shall be used as in-line devices for suppression of conducted powerline transient. In-line inductors shall safely pass equipment operation voltages and line current with 130 percent overvoltage conditions for a period of 50 milliseconds.

e. Housing. Suppression components should be housed in a separate, shielded, compartmentalized enclosure as an integral part of equipment design. Bulkhead-mounted, feedthrough capacitors should be used as necessary to prevent high-frequency transient energy from coupling to equipment circuits. Suppression components should be directly bonded to equipment case ground when at all feasible. Suppressor Connections to ground must be short, straight, and direct.

1.3.3.7.7 Power Supply Transient Suppression. Power supplies (5 to 48 V dc) that operate from commercial ac power inputs and furnish operating voltage to solid-state equipment must have a transient suppressor installed between the rectifier output and case ground. This protection (in addition to the service disconnect arrester and powerline suppression at equipment entrances) is required because of the adverse electromagnetic environmental operating conditions for much military equipment. A silicon avalanche diode suppressor will provide the best protection for this particular application. The silicon avalanche diode suppressor is recommended because of the very fast response time of the device, since the primary purpose is to clamp very fast risetime and very short duration transients. In addition, the silicon avalanche diode suppressor provides the lowest clamping voltage available. Thus, when this device is used, the clamped output of the transient suppression at the ac input-equipment interface will be clamped to a lower level by the avalanche diode at the rectifier. This, in turn, provides optimum protection for solid-state voltage regulators and other solid-state components receiving operating voltage from the power supply. Operating characteristics for the suppressor installed at the rectifier output must be as follows if the suppressor is to provide the desired function:

a. Operating (reverse standoff) voltage. Reverse standoff voltage must be 5 percent above maximum rectifier output voltage.

b. Leakage current. Leakage current to ground should not exceed 100 microamperes at standoff voltage.

c. Turn-on voltage. Turn-on voltage must be as near standoff voltage as possible using state-of-the-art suppressors, and shall not exceed 125 percent of reverse standoff voltage.

d. Discharge (clamp) voltage. Clamp voltage must be the lowest possible value that can be obtained using state-of-the-art suppressors not to exceed 160 percent of turn-on voltage.

e. Overshoot voltage. Overshoot voltage must be sufficiently low to preclude equipment damage or operational upset. Time duration of overshoot voltage shall be limited to the shortest possible time not exceeding 2 nanoseconds.

f. Self-restoring capability. Transient suppressors installed in power supplies must automatically restore to an off state when line transient falls below rated turn-on voltage for the suppressor.

g. Operating lifetime. The transient suppressors must safely dissipate 1000 surges with an amplitude of 200 volts above rectifier output voltage and a waveform of 8-by-40 microseconds. Eight microseconds defines the time from the start of the transient to peak voltage, and 40 microseconds is the time from the start of the transient until the transient exponentially decays to 50 percent of peak value.

1.3.3.7.8 Landline Transient Suppression. When the equipment withstand level is below the transient energy level projected to occur at direct landline-equipment interfaces, transient suppression must be provided by equipment design. Generally, all direct landline-equipment interfaces will require transient suppression. However, when the landlines are totally enclosed end-to-end in ferrous metal conduit, a much lesser degree of suppression is required than when the landlines are direct earth-buried or overhead cable runs. A t the time of new equipment design, when provisions for transient protection must be included, the manufacturer may not know whether externally exposed landlines will be totally enclosed in ferrous metal conduit. When the

manufacturer is not conclusively certain that external landlines will be enclosed in metal conduit, designed transient protection must ensure that the equipment will be adequately protected against the transient levels of Table 1-19. Subsequent paragraphs provide design guidelines for transient suppression for all types of landlines. Coaxial and twinaxial lines are treated separately. Also, externally-exposed landlines that carry signals of 3 MHz to 400 MHz are treated separately.

a. Control, status, intrafacility power, and audio landlines. Control, status, intrafacility power, and audio lines, other than coaxial or twinaxial lines, are most effectively protected by transient suppression designed as an integral part of the equipment, and specified transient suppression installed at building penetration or exterior equipment termination. Effective design is shown in Figure 1-43.

(1) Suppression design and component selection. Transient suppression will effectively protect equipment only when proper components are selected so that the components operate in conjunction to provide the desired function. This is necessary so that the clamped output of the suppression components/circuits can provide optimum equipment protection. Actual suppression components are shown in Figure 1-43 as GT1, RV1, RV2, and TS1. The suppression component at the equipment entrance should be chosen so that it has a lower turn-on and clamping voltage than the suppression component at the facility entrance. Therefore, resistor R1 must provide a voltage to turn on the suppression component at the facility entrance and limit current flow through the suppressor at equipment entrance. Otherwise, the suppression component at the facility entrance may not turn on when a transient occurs. The component will not normally turn on when a transient of less than 400 volts peak amplitude occurs and the component is a gas-filled spark gap (GT1). However, when a transient of greater amplitude occurs, the suppression component at the facility entrance must turn on. Otherwise, the suppression component at the equipment entrance will attempt to dissipate the entire transient to ground. As a result, the suppression component at the equipment entrance will attain a higher clamp voltage as it dissipates additional transient current. The higher clamp voltage is reflected across protected equipment. In addition, the suppression component is likely to fail.

(a) Gas-filled spark gap GT1. A gas-filled spark gap is suitable for use as a transient suppressor at the building/facility entrance in some cases. The device has a relatively high sparkover (turn-on) voltage and a relatively slow turn-on time when compared with a metal oxide varistor (MOV) or silicon avalanche diode suppressor (SAS). For typical lightning-induced transients on landlines, turn-on voltage is a nominal 500 volts with an associated turn-on time of 5 microseconds. These characteristics are satisfactory as long as the value of resistor R1 is 10 ohms or more, and the peak pulse current rating for the suppression component at the equipment entrance is not exceeded. When R1 is 10 ohms, a peak current of 50 amperes is required to provide a voltage of 500 volts across R1 which is the nominal turn-on voltage for GT1. Since GT1 turns on after a nominal 5 microseconds, the peak pulse current rating for most MOV and SAS devices will not be exceeded. After the spark gap turns on, arc voltage across the device is a nominal 20 volts. This may be sufficiently below the normal line voltage to create operational upset of the protected equipment, which in some cases cannot be tolerated. If normal line voltage is greater than 20 volts, difficulty may be encountered in turning off the device, depending on available current. The arc mode of operation may be sustained by current greater than 1 ampere for some devices. When the value of R1 is less than 10 ohms, an MOV or other equivalent suppressor must be used at the facility entrance because a spark gap will not turn on before the suppressor at the equipment entrance is damaged by overcurrent, particularly when the suppressor at equipment entrance is an SAS.

(b) Metal oxide varistor (MOV) RVl, RV2. As shown in Figure 1-43, MOVs can be used in Various configurations to provide effective transient suppression. Turn-on time for the MOV is less than 50 nanoseconds, and turn–on voltage ranges from 22 to 1800 volts. Clamp voltage is not as low as for SAS devices and turn-on time is not as fast. The turn-on time for SAS devices is typically less than 10 nanoseconds, and less than 1 nanosecond in some configurations. The configuration shown in Figure 1-43c is especially effective for protecting highly susceptible equipment. The configurations shown by Figures 1-43a and l-43b provide adequate protection when the protected equipment can safely withstand the rated clamping voltage for the MOV at the equipment entrance. An MOV with a 20 mm element diameter will normally provide required protection at the facility entrance, and a 10 m m element diameter MOV will normally provide required protection at the equipment entrance. To enable desirable functioning, the turn-on voltage of the MO V suppressor at the facility entrance should exceed that of the MOV at the equipment entrance by approximately 10%. This is desirable to permit the MOV at the equipment entrance to turn on and dissipate low-amplitude transients while reflecting a low clamp voltage to protected equipment. When a high-amplitude transient occurs, the voltage increase across Rl will cause the MOV at the facility entrance to turn on. When the MOV at the facility entrance turns on, it dissipates most of the remaining transient energy, thereby eliminating or greatly reducing the energy to the 110 V at the equipment entrance. Thus, the MOV at the equipment entrance wıll conduct only a small amount of current and maintain a low clamp voltage that will appear across the protected equipment. The MOV operating characteristics are similar to those for a pair of back-to-back zener diodes. Therefore, the device responds the same to a negative or positive transient voltage.

(c) Silicon avalanche diode suppressor (SAS) TS1. The SAS device has the fastest turn-on time of any of the three suppressor devices shown in Figure 1-43. Turn-on time is typically less than 10 nanoseconds and can be less than 1 nanosecond in some configurations depending on lead length and the path to ground for the device. Turn-on voltage ranges from 6.8 volts to 200 volts. Devices may be connected in series to obtain higher turn-on voltages and to improve power handling capability, For example, two devices connected in series can dissipate approximately 1.8 times the power dissipated by a single device. The clamping voltage for the device is also lower than for MOV devices. The maximum clamping voltage for the SAS devices is approximately 1.6 times the turn-on voltage at peak pulse current. Peak pulse current ranges from 139 amperes for a 6.8-volt device to 5.5 amperes for a 200-volt device over a period of 1 millisecond. Devices recommended for use at the equipment entrance have a peak pulse power dissipation rating of 1500 watts over a period of 1 millisecond. Devices are available in both unipolar and bipolar configurations. Operation of a unipolar device is very similar to that of a zener diode, and operation of a bipolar device is very similar to that of a pair of back–to-back zener diodes. For the most effective protection, unipolar devices should be used on lines that carry unipolar voltage provided the ac noise level on the applicable line is less than 0.5 volt. Use bipolar devices on lines that carry bipolar (at) voltage and on lines with an ac noise level greater than 0.5 volt. Select SAS devices based on the reverse standoff voltage rating. The reverse standoff voltage must be greater than maximum line operating voltage, and should exceed normal line voltage by 20% when possible.

(d) Resistor R1. The function of resistor R1 is to provide current limiting for the suppression device at the equipment entrance and to provide a turn-on voltage for the suppressor at the facility entrance. Empirical evidence has shown that the power rating for the resistor should be 5 watts. The resistance value should be as high as equipment operation will permit. Typical values are 10 to 50 ohms. Values as low as 2 ohms have been successfully used. However, when the value is less than 10 ohms, the suppressor at the facility entrance must be an MOV or equivalent type suppressor.

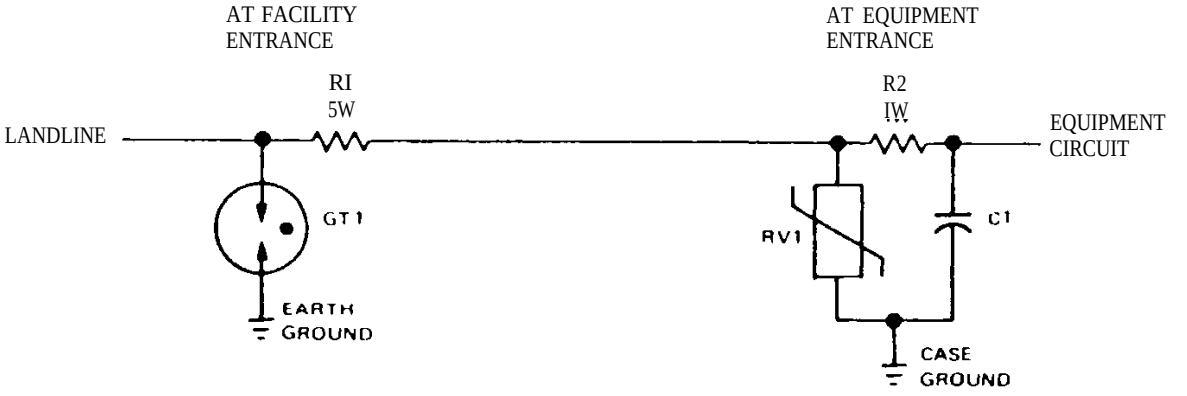

a. CONFIGURATION NO. 1

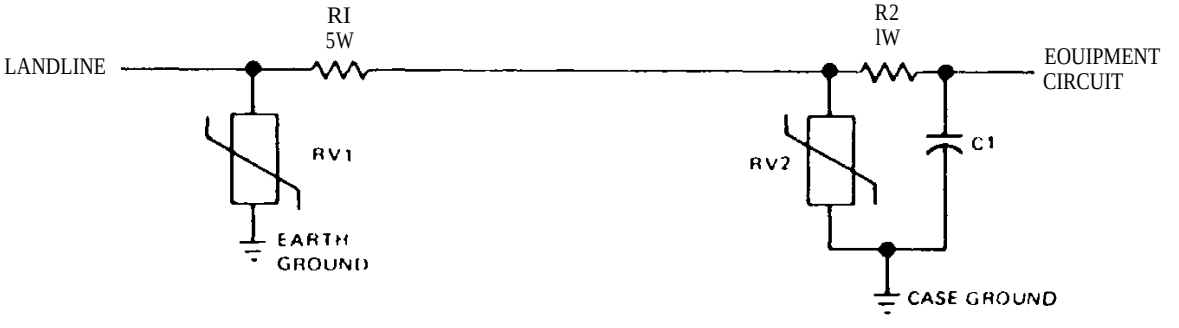

b. CONFIGURATION NO. 2

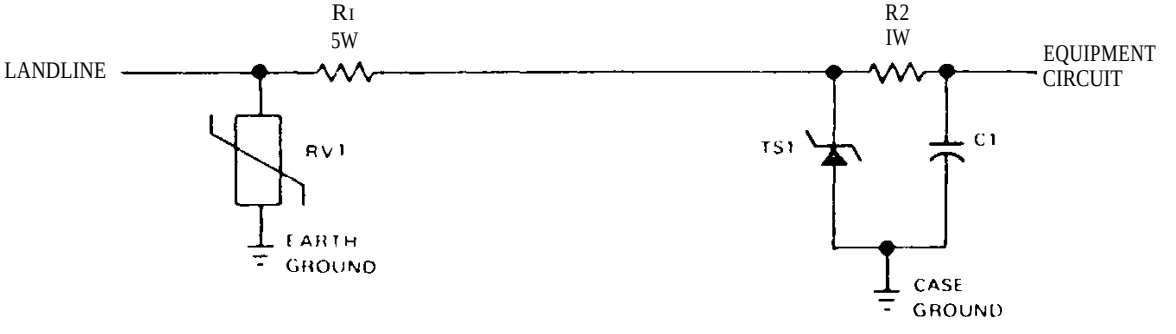

c. CONFIGURATION NO. 3

Figure 1-43. Typical Configuration for Protection of Equipment from Conducted Landline Transients

(e) Resistor R2 and capacitor C1. Resistor R2 attenuates current flow to protected equipment resulting from clamp voltage of the transient suppressor at the equipment entrance. The resistor also speeds up, and in some cases, generates turn-on of the transient suppressor at the equipment entrance. In addition, the resistor limits current drain from protected equipment when a transient with polarity opposite that of tile equipment power supply occurs. A power rating of 1 watt is sufficient for the resistor. The resistance value should be as high as can be tolerated by applicable equipment, taking into consideration the value of resistor R1 and the impedance of the associated landline. The purpose of capacitor C1 is to filter out some high-frequency transient components, and the value of C1 should be selected accordingly. In some cases, equipment operating characteristics and line length may preclude the use of resistor R2 and eapacitor C1.

(2) Grounding for suppresion components/circuits. The high-energy transient suppressors, shown at the facility entrance in Figure 1-43 must be grounded to earth ground by means of the shortest path. This will minimize the large voltage spikes, caused by L di/dt effects when high-amplitude transient currents flow through the high-energy transient suppressor onto the ground, which in turn may damage protected equipment or the low-energy transient suppressors at the equipment entrance.

(a) Grounding of transient suppressor at facility entrance. The high-energy transient suppressors installed at the facility entrance should be located in a junction box or the main (first) service disconnect where incoming lines are first terminated. The most effective ground for the suppressors can be provided by a ground bus bar located in the first service disconnect or the junction box. The transient protection devices (TPD's) must be bonded to the TPD box and grounded by the shortest means. It is important that the ground wire has no sharp turns or bends, and is as short as feasible. The ground bus bar should be located to permit short, direct connection of suppressors between landline terminations and earth ground.

(b) Grounding of transient suppressor at equipment entrance. The low-energy transient suppressor at the equipment entrance should be directly bonded to the equipment case when possible. The ground side of the suppressor at the equipment entrance must be connected with a short, straight, direct connection to equipment case to be effective. Connection of the suppressor to equipment case references both the suppressor and equipment circuits to the same ground potential, thus providing optimum equipment protection.

(3) Packaging design. Transient suppression components/circuits included as an integral part of equipment design should be enclosed in a shielded, compartmentalized section of the equipment. This is necessary to preclude cross-coupling of transient energy to other equipment circuits. The suppression components must be located so that transients are attenuated prior to entering any equipment component susceptible to damage, including EMI filters. Packaging design for transient suppression specified for installation at facility entrance is not critical. However, the design should provide for short, direct connection of transient suppressors between the line termination and ground.

b. Coaxial and twinaxial lines (dc to 3 MHz). The same transients are projected to occur on externally exposed coaxial and twinaxial lines as on the control and status lines discussed in paragraph 1.3.3.7.8a. In general, the same transient protection described in paragraph 1.3.3.7.8a will provide effective transient protection for equipment that directly interfaces the coaxial and twinaxial lines. That is, the most effective transient protection is provided by installing a high-energy transient suppressor and resistor at the facility

entrance or exterior equipment termination, with low-energy transient suppression included as an integral part of tile equipment as shown in Figure 1-43. However, in many cases, end equipment connected to coaxial lines cannot tolerate added capacitance imposed by capacitor C_1. Also, in most cases, the added resistance of resistor R2 cannot be tolerated. Because most end equipment connected to coaxial and twinaxial lines has a relatively low withstand level, the configuration shown in Figure 1-43c, without resistor R_2 and capacitor C_1, should be used for transient suppression. The silicon avalanche diode suppressor TS_1 should always be bipolar. The configuration shown by Figure 1-43c should be used for protection of equipment that directly interfaces externally exposed twinaxial lines. In most cases, it is necessary to use a bipolar SAS since the twinaxial lines normally conduct both dc and low–level audio signals. Specific design criteria is provided in paragraphs (1) and (2) below.

(1) Facility entrance suppression. The high-energy transient suppression specified for location at facility entrance or exterior equipment termination should be designed for in-line installation on applicable lines. The lines should be terminated at a metal connector plate located in a junction box at the facility entrance or exterior equipment termination. Transient suppression components should be enclosed in a sealed, metal enclosure with appropriate connectors to facilitate in-line installation. The ground side of suppressor(s) in tile sealed package must be connected as directly as possible with No. 12 AWG copper wire (minimum) to a ground point located on the exterior of the sealed package to facilitate connection to a ground bus or tie point in the junction box. The package for a twinaxial line must include two suppression circuits, one for each of the two center conductors. Also, when a coaxial cable shield is not directly grounded at interfaced equipment, the enclosure for In-1ine Installation must also contain two transient suppression circuits, one for the cable center conductor and one for the cable shield. Circuit configurations for each type of line are depicted in Figures 1-44 and 1-45. Primarily because of the grounding configuration, MOV or equivalent devices should be used at facility entrance.

(2) Equipment entrance suppression. Equipment entrance suppression is shown in Figure 1-44 for coaxial line-equipment interfaces. The transient suppression should be enclosed in shielded, compartmentalized areas to prevent cross-coupling of transient energy to other equipment circuitry. The transient suppression must be located so that transients are attenuated prior to entering any susceptible equipment components, Including EMI filters. Because of the normally low withstand levels for end equipment, only bipolar avalanche diode suppressors should be used at equipment entrance. However, MOV suppressors may be used when the protected equipment can safely withstand tile clamp voltages that will appear across protected equipment. For the most effective protection, the ground side of transient suppressors should be bonded directly to equipment case. When direct bonding is not possible, short, direct connections to equipment case must be used.

c. Transient suppression for lines in metal conduit. When externally exposed lines are enclosed end-to-end in ferrous metal conduit, the amplitude of transients projected to be conducted to equipment will be attenuated a minimum of 90%. The number of transients that occur will not change. Therefore, the number of transients listed in Table 1-19 will still occur, but amplitudes will be only 10% of the amplitudes listed in Table 1-19. When the equipment manufacturer is absolutely certain that all externally exposed equipment lines will be enclosed in ferrous metal conduit, total transient suppression should be designed as an integral part of the equipment. The total transient suppression should consist of a 5-watt resistor in series with the landline input, and an MOV or SAS connected line-to-ground on the equipment side of the 5-watt resistor.

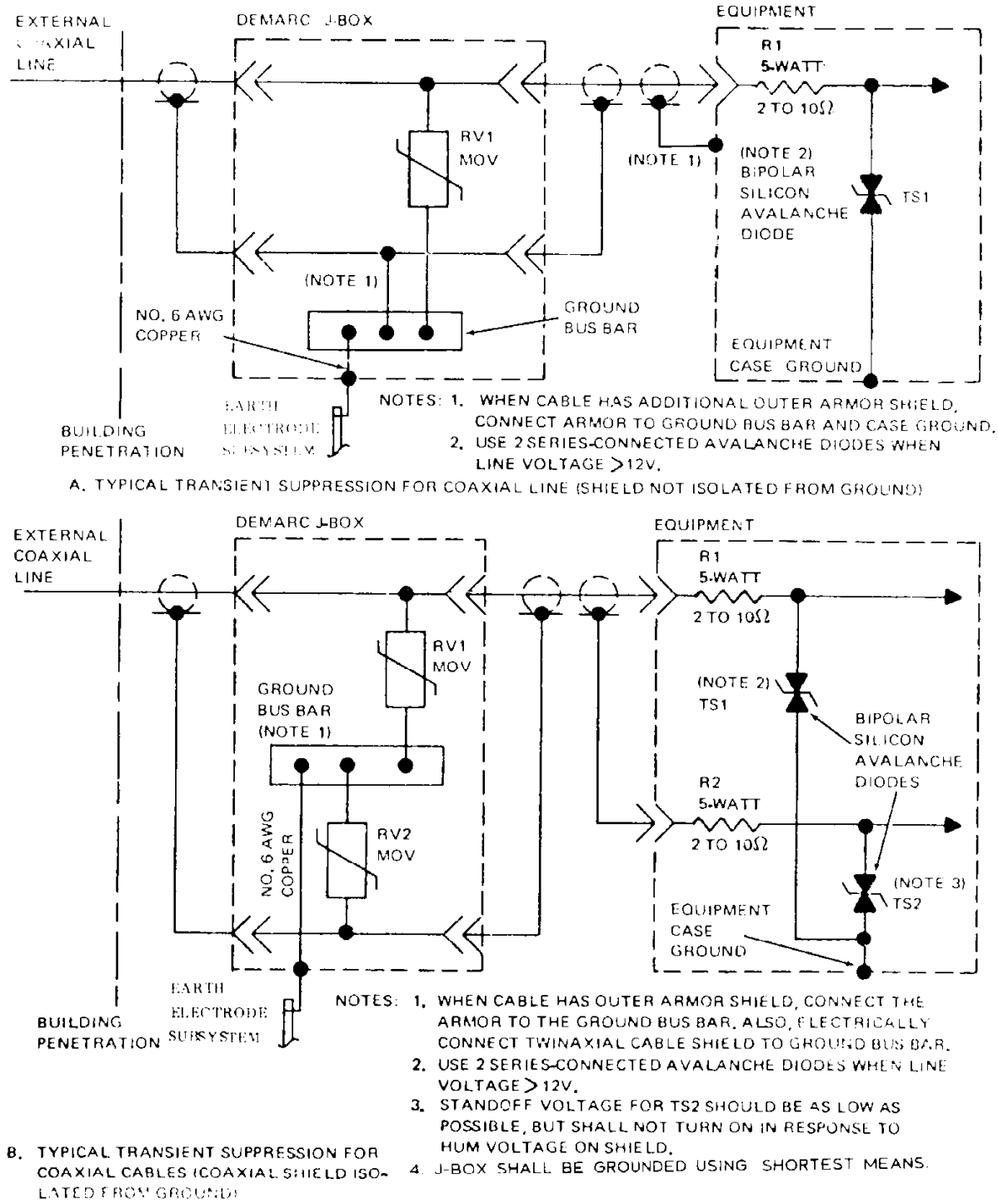

Figure 1-44. Transient Suppression for Coaxial Lines (DC To 3 MHz)

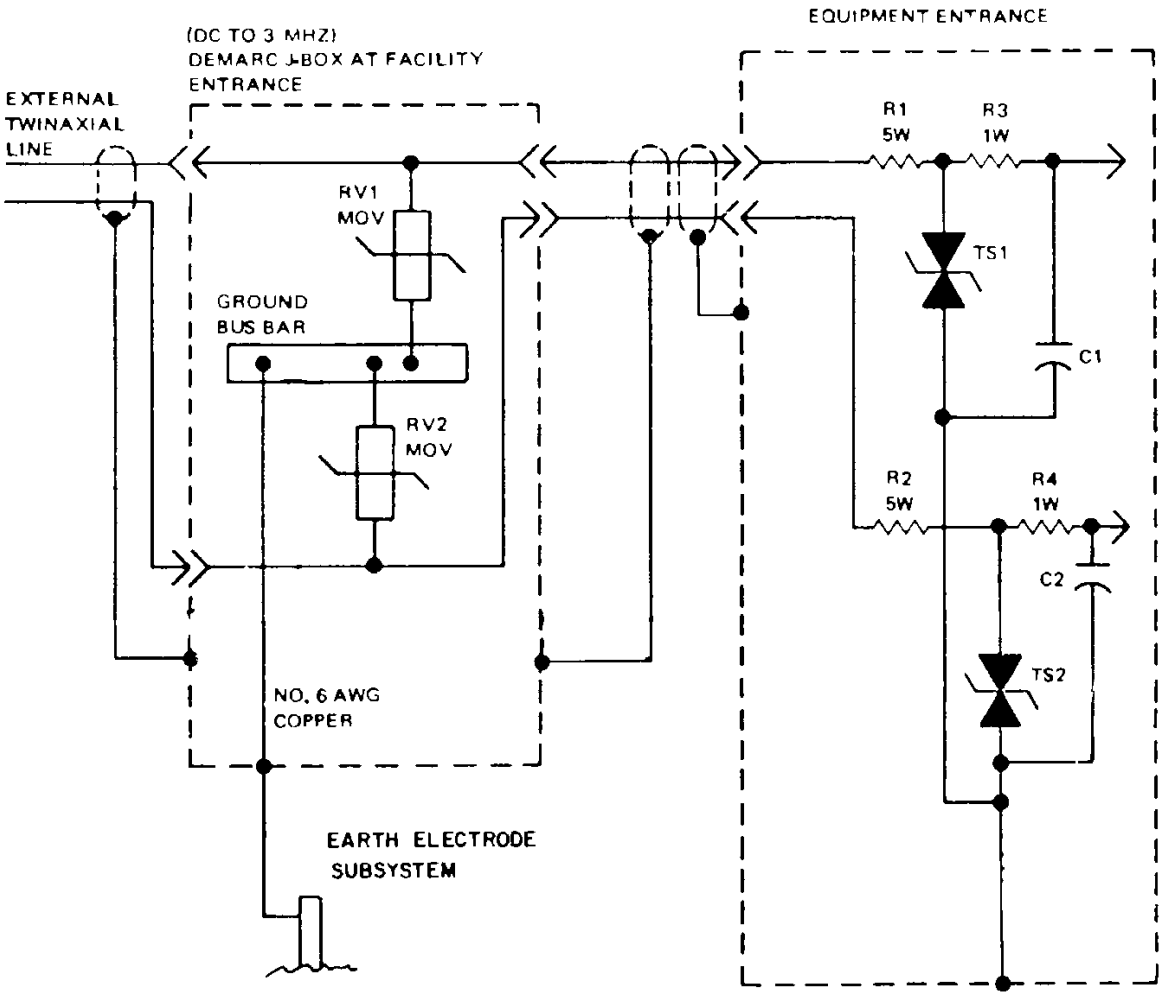

Figure 1-45. Transient Suppression for Twinaxial Lines (DC To 3 MHz)

d. Functional characteristics. For effective transient suppression, the suppression components must have certain minimum operating or functional characteristics. These characteristics are defined in paragraphs 1.3.3.7.8d(l) and (2) for high-and low-energy transient suppressors, respectively.

(1) High-energy transient suppression characteristics.

(a) Reverse standoff voltage. Reverse standoff voltage for spark gap type suppressors should be between 200 and 300 percent of the nominal operating line voltage. For MOV, ZNR, and SAS type suppressors, the reverse standoff voltage should be 175 + 25 percent of the nominal line voltage.

(b) Leakage current. I.eakage current to ground should not exceed 100 microamperes at reverse standoff voltage.

(c) Turn-on voltage. Turn-on voltage should not exceed 125 percent of reverse standoff voltage.

(d) Overshoot voltage. Overshoot voltage should be the lowest voltage that can be obtained, for the shortest time possible, using the best state-of-the-art suppressors available.

(e) Clamp (discharge) voltage. Clamp voltage of the transient suppressors should be as low as possible and not more than 225 percent of turn-on voltage when discharging a transient with 1000 amperes peak amplitude.

(f) Operating life. The transient suppressor must be capable of discharging the number of transients listed in Table 1-19 with peak amplitudes that are 90% of those listed in Table 1-19. Clamp voltage must not change more than 10 percent over the operating lifetime.

(g) Self-restoring capability. The transient suppressor must automatically restore to the off state when the transient voltage level falls below turn-on voltage.

(2) Low-energy transient suppressor characteristics.

(a) Reverse standoff voltage. The reverse standoff voltage rating of the transient suppressor should be between 200 to 300 percent above the nominal line voltage for spark gap type suppressors. For MOV, ZNR, and SAS type suppressors, the reverse standoff voltage should be 175 ± 25 percent of the nominal line voltage.

(D) Turn-on voltage. Turn-on voltage of the suppression component at the equipment must be as close to reverse standoff voltage as possible using state-of-the-art devices, and shall not exceed 125 percent of reverse standoff voltage.

(c) Overshoot voltage. Overshoot voltage must be the lowest value that can be obtained, for the shortest time possible, using state-of-the-art suppressors. Overshoot voltage shall be low enough to preclude equipment damage or operational upset. The requirement will apply for transients with rise times as fast as 5,000/µs.

(d) Leakage current. Leakage current to ground should not exceed 100 microampere at reverse standoff voltage.

(e) Clamp voltage. Clamp voltage must remain below the equipment withstand level while dissipating transient currents with peak amplitude that are 10 percent of those listed in Table 1-19. The clamp voltage must not change more than 10 percent over the operating lifetime.

(f) Operating life. The transient suppressor must be capable of safely dissipating the number of transients listed in Table 1-19, with current amplitudes that are 10 percent of those listed in Table 1-19.

e. RF coaxial lines (above 3 MHz). At the present time, there is some difficulty encountered in providing effective transient suppression for lines that conduct signals above 3 MHz in frequency, and especially above 10 MHz. Most suppression devices that provide low-level clamping of transients have enough capacitance to create high insertion losses when installed line to ground on the conductor. Packaging of the devices for in-line installation without causing high insertion losses is also difficult and expensive. Gas-filled spark gaps have

been successfully packaged for in-line installation on critical rf lines, but unit cost is excessive. Also, gas-filled spark gaps do not always provide satisfactory protection because of high sparkover (turn-on) voltage, slow turn-on time, and low arcing voltage. Therefore, the best alternative at present is to include transient suppression design as an integral part of new equipment.

(1) Transient suppression design. Potential sources of effective transient suppression are gas-filled spark gaps, MOV in series with rf chokes, and surge-rated, low capacitance silicon avalanche diodes paralleled with selected rf chokes. A11 of the suppression devices and components are for line-to-ground connection at the line-equipment interface.

(2) Transient suppression grounding. The total transient suppression is included as an integral part of the equipments, and may have to dissipate the transient currents listed in Table 1-19. However, in most cases, these lines will be enclosed in ferrous metal conduit, and the amplitude of occurring transients will therefore be only 10% of the values listed in Table 1-19. In either case, the transient suppression should be grounded directly to equipment case ground using the shortest and most direct method possible. The equipment case must, in turn, be effectively connected to the earth grounding system via the equipment rack and the equipment grounding conductor, when applicable.

(3) Packaging design. The transient suppression should be located in a shielded, compartmentalized section of the equipment and located so that conducted transients are attenuated prior to entering any susceptible circuit component.

1.3.3.8 Corrosion Control.

a. The materials of which lightning protection subsystems are made must be highly corrosion resistant. Junctions or contact between dissimilar metals must be avoided; where such unions are unavoidable, moisture must be permanently excluded from the contacting surfaces.

b. Where any part of a copper protective system is exposed to the direct action of chimney or other corrosive gases, the exposed copper elements are to be protected by a continuous hot dip coating of lead. The coating should extend at least 0.6 meters (2 feet) below the top of the chimney or past the vent or flue opening.

c. Where aluminum down conductors are used, do not permit them to come in contact with the soil.

(1) Connections between aluminum down conductors and copper ground electrode risers are not to be made lower than one foot above grade level; use UL-approved bimetallic connectors for these connections.

(2) Aluminum parts, including fasteners and anchors, should be protected from direct contact with concrete or mortar wherever such concrete or mortar is wet or damp or may become intermittently wet or damp.

(3) Aluminum parts also must be protected from contact with alkaline-based paints.

d. Aluminum parts are not to be used on copper roofing materials and must not contact other copper surfaces such as gutters, flashings, and trim. Similarly, do not use copper lightning protection materials on aluminum structures or on structures using aluminum roofing materials or aluminum siding. Avoid contact between copper conductors, terminals, and fasteners and aluminum gutters, windows, and trim.

e. In aluminum lightning-protection systems, copper, copper-covered, or copper-alloy fixtures and fittings must not be used for connectors. Where aluminum must connect to copper, only UL-approved bimetallic connectors are to be used.

1.3.3.9 Joints.

a. Welded or brazed bonds are preferred over all other types; in particular, junctions in inaccessible locations should be welded or brazed whenever practical.

b. Never use soldered connections for bonding any part of the lightning protection system.

c. Bolted or clamp-type connections should employ only UL-approved connectors.

d. Where bolted connections to flat surfaces are necessary, the surface contact area should be 3 square inches (19.5 square cm) or greater.

1.3.3.10 Physical Protection.

a. Protect all elements of the lightning protection system from damage and physical abuse by routing conductors to take advantage of any protection offered by structural features. Install appropriate guards or covers preferably made of wood or noncombustible synthetic material.

b. Where conductive conduit is used, bond the conduit to the enclosed lightning conductor at each end of each isolated section of the conduit. (Standard conduit grounding lugs are acceptable.)

c. The use of ferrous conduit to enclose lightning conductors should be avoided because it increases the impedance of the lightning conductor.

1.4 FAULT PROTECTION SUBSYSTEM.

1.4.1 Purpose. In Volume I, the equipment fault protection subsystem was described as a network which ensures that personnel are protected from shock hazard and equipment is protected from damage or destruction resulting from faults that may develop in the electrical system. To accomplish this, ground connections must be adequate for both normal and fault currents. The fault protection subsystem includes the green wire and all exposed noncurrent-carrying metal parts of fixed equipment such as raceways and other enclosures which are likely to be energized under power fault conditions. Any conductor used for grounding purposes shall not penetrate any designated rf barrier, screen room, shielded enclosure etc., but shall rather be bonded to a welded stud on the barrier. In general, the equipment fault protection subsystem will conform to the requirements established in MIL-STD-188-124A.

1.4.2 Equipment Fault Protection Subsystem Composition. One of the major shortcomings in grounding systems is the interconnection and reversal of ac neutral and protective wires of the ac power distribution at various power distributions panels and at equipment througout a facility. These installation errors result in additional electrical noise and ac currents in the ground system. The equipment fault protection subsystem should generally follow a configuration from a central or main ground point which, ideally, should be at the primary power station transformer ground point: or, it should be bonded directly to the earth electrode subsystem at thle communications building, if a protective wire is not available to the main ground point. The configuration consists of a central main or trunk lead from the power source with protective conductors to the various intermediate power panels and equipment. The protective wire is carried along with the phase and neutral wires from the main ground point to the main circuit breaker pannel, from there to intermediate circuit breaker panels to the equipment panels, and finally to the equipment.

1.4.3 Configuration of the Equipment Fault Protection Subsystem.

a. The equipment fault protection subsystem consists primarily of the grounding conductors of the interior ac power distribution system. The grounding conductors are green insulated or bare wires running in the same conduit or duct with the neutral and phase conductors. revered grounding conductors are preferred to reduce EMI. Figure 1-46 illustrates a typical equipment fault protection subsystem. Key points to be noted are:

(1) The conduit is grounded to the power panel at each end, but it is not used in lieu of a grounding conductor which continues through the conduit to the protective bus bar.

(2) The ac neutral lead can be grounded at the first service disconnect means. In this case, the ac neutral also serves as a protective conductor back to the source. For best results, the ac neutral {grounded) and green (grounding) wire should be grounded at the service transformer and the first service disconnect means through the five-wire distribution system.

b. To protect personnel from exposure to hazardous voltages, all exposed metallic elements of electrical and electronic equipment shall be connected to ground. In the event of inadvertent contact between the "hot" lead and chassis, frame, or cabinet through human error, insulation failure, or component failure, a good, direct, known fault current path will be established to quickly remove the hazard. The neutral lead shall be grounded for fault protection preferably at the distribution transformer and if the transformer is outside the building, at one additional point outside the building. It should never be grounded on the load side of the first service disconnect means.

c. Grounding conductors and ground connections for transformers, switchgears, motors etc., shall comply with the requirements of the NEC Articles 250-92 and 250-95.

d. Metal boxes, fittings, and noncurrent-carrying metal parts of other fixed equipment do not require additional protection if metallically connected to the grounded cable armor or bonded to the grounded members of the building. MIL-STD-188-124A provides that the path to ground for circuits, equipment, and conductor enclosures be permanent and continuous. The path must have (1) the capacity to conduct safely any fault current likely to be imposed upon it, and (2) sufficiently low impedance to limit voltage to ground and to aid the operation of circuit protective devices.

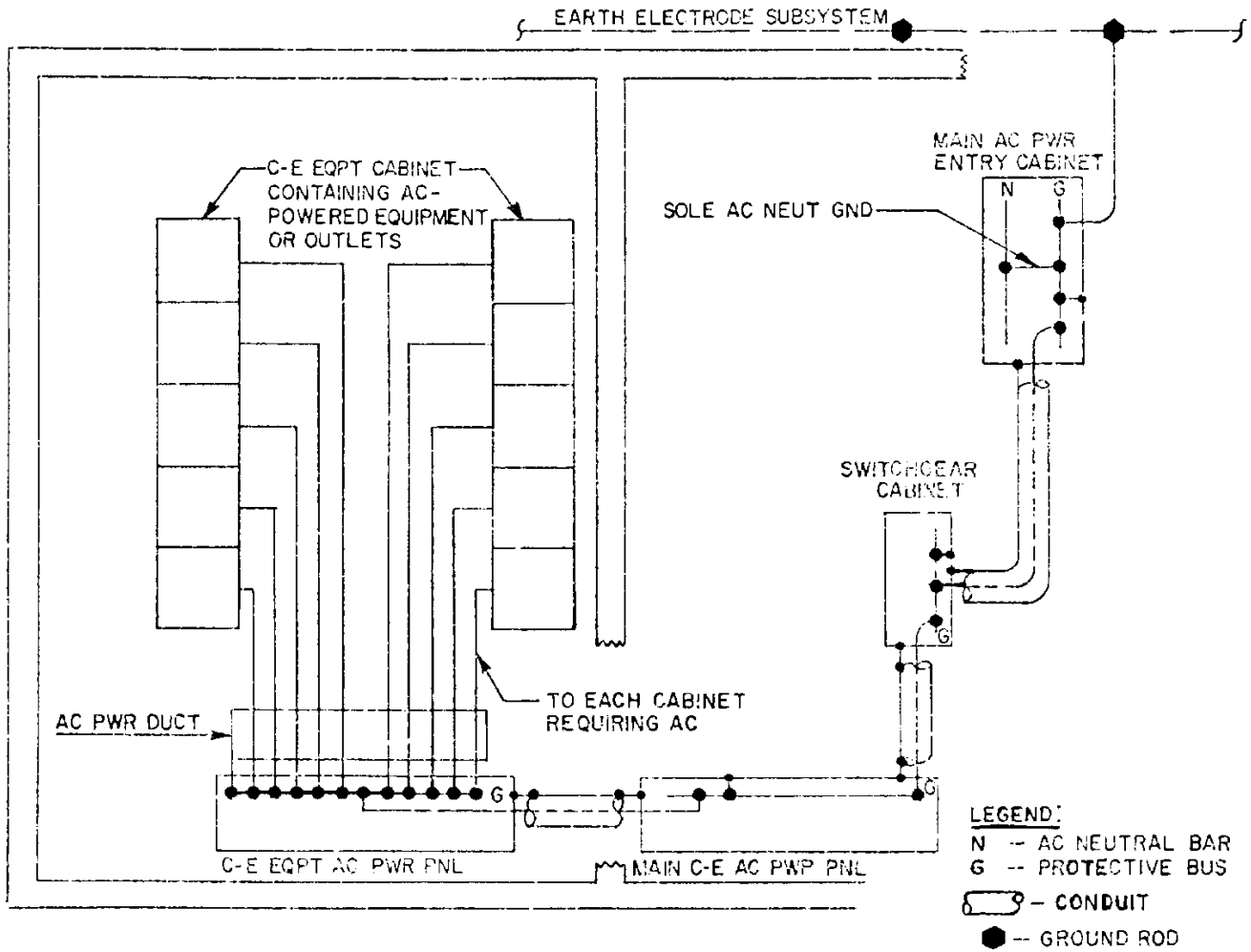

NOTE 1: AC PHASE AND NEUTRAL WIRES AND METAL-TO-METAL CONTACTS ARE OMITTED FOR CLARITY. THE GREEN WIRE IS IN THE SAME ENCLOSURE OR CABLE WITH THE POWER CONDUCTORS.

NOTE 2: ALL GROUNDING CONDUCTORS PENETRATING/CROSSING A DESIGNATED RF BARRIER/SHIELD SHALL BE BONDED TO THE BARRIER OR SHIELD.

Figure 1-46. Typical Equipment Fault Protection Subsystem

e. Article 250-91 of the NEC describes the types and materials used for equipment grounding conductors. Types include solid and stranded (insulated or bare) wire or other shapes, such as metallic tubes, pipes, and conduit. The grounding conductor types permitted by the NEC also include various metal ducts, cable trays, and raceways however these types shall not be used in lieu of the equipment grounding conductors. The NEC also permits/allows certain types of armored cable sheath be used as grounding conductors.

f. Experience with military C-E facilities has proven that a low-noise, low-impedance equipment fault protection subsystem can be maintained over a prolonged period of time if separately designed and installed ground conductors are provided. Therefore, a separate equipment fault protection conductor shall be included with the ac power distribution if not provided in the power cable. A grounding (green) wire should be used and installed in the same conduit as the other ac wires. When ferrous ducts or conduits are used to protect or shield the neutral and phase conductors, the lowest impedance will result when this grounding conductor is installed in tile same duct or conduit. The impedance can be further decreased if the grounding conductor is wrapped around the other conductors and bonded to tile duct or conduit at both ends. In a correctly installed power distribution system, there should be no power current on the grounding conductor, except during a fault condition. It should be noted that there are two types of faults causing overcurrent devices to operate. The first is an overload condition in equipment. In this case, fault current is on the neutral and phase leads. The second fault is where a phase or hot lead is inadvertently grounded. The faint current in this case is on the base lead and the grounding conductor. In both cases, the overcurrent protective device, usually a circuit breaker, is opened in tile phase or hot lead. Due to the fault currents that can flow either on the phase leads, neutral, or grounding conductor, it is recommended that a 2-inch separation be maintained between power runs and signal runs when neither is in conduit.

1.4.4 Pipes and Tubes.

a. All metallic pipes and tubes (including conduit) and their supports should be electrically continuous and are to be bonded to the facility ground system at least at one point. If any run of metal pipes or tubes exceeds 3 meters (10 feet) in length, it should be bonded to the facility ground system at each end. Also, longer runs should be bonded to the facility ground system at intervals of approximately 45 meters (150 feet).

b. At indoor locations, these bonds may be made with clamps which provide continuous pressure. Pipes installed out of doors should be bonded to the facility ground system at entry point or wherever feasible by welding or brazing. Compatible stainless steel straps may be used with stainless steel pipe. In the event that a direct bond cannot be made, zinc-plated hose clamps or stranded, bare copper, untinned bond straps may be used. All bonds should be adequately protected against corrosion in humid or corrosive environments.

c. Joints in metal pipes and tubes should have a dc resistance no greater than 5 milliohms. In the case of threaded joints, the threads should be cleaned and firmly tightened (200 ft-lbs for hard wall conduit) and protected against corrosion. Leaded or caulked joints, flared and other compression fittings, and 0-ring fittings should all be measured to verify that the joints have a dc resistance no greater than 5 milliohms.

1.4.5 Electrical Supporting Structures. Electrical supporting structures such as conduit, cable trays or raceways, wiring system enclosures, and metallic power cable sheaths should be electrically continuous and are to be bonded to the facility ground system at multiple points, In the event of a fault, this continuity will prevent these structures from rising to a hazardous potential.

1.4.5.1 Metal Conduit.

a. All metal conduit is to be grounded, regardless of whether it is used for enclosing power cables or for signal and control cables.

b. All joints between sections of conduit and between conduit, fittings and boxes should be made electrically continuous when they are installed.

c. All pipe and locknut threads should be thoroughly cleaned before they are engaged and then tightened flrmly. For additiona1 information see Sections 7.6 and 7.7 of Volume I.

d. Gouging locknuts must positively penetrate all paint or other nonconductive finishes.

e. Any joints not inherently continuous should be bonded with jumpers of No. 12 AWG or larger copper wire. These jumpers should be welded or brazed in place or attached with clamps, split bolts, grounding bushings, or screws and lockwashers.

f. Protect the bonds against weather, corrosion, and mechanical damage.

g. Firmly tighten the screws on the cover plates of pull boxes, junction boxes, and outlet boxes.

h. All conduit brackets and hangers should be securely bonded to both the conduit and to the structural member to which they are attached. Bond conduit runs, to include the individual sections, couplings, line fittings, pull boxes, junction boxes, outlet boxes, etc., to the facility ground system at intervals not exceeding 15 meters (50 feet). The resistance to each connection should not exceed 5 milliohms.

1.4.5.2 Cable Trays. Make all cable tray systems electrically continuous by bonding together each individual section as described in Section 1.7.4.1. Bond each support bracket or hanger to the cable trays which they support. Connect the cable tray assemblies to the facility ground system with copper cables or equivalent conforming to the 2000 cmil per foot criterion. Make the connections within two feet of each end and at intervals not exceeding 15 meters (50 feet) along the run. Where metal covers are used, they should be securely bolted in place.

1.4.5.3 Enclosures. Ground all enclosures of electrical and electronic wiring and distribution equipment in accordance with MIL-STD-188-124A.

1.4.5.4 Cable Armor. The armor on electrical power cables should be bonded to the facility ground system at each end if the cables are 3 meters (10 feet) or longer. Provide supplemental connections at intervals not exceeding 15 meters (50 feet). The resistance of each connection should not exceed 5 milliohms.

1.4.5.5 Rotating Machinery, The frames of motors, generators, and other types of electrical rotating machinery are to be connected to the facility ground system in accordance with the NEC requirements (1-6).

1.4.6 Power Distribution Systems.

a. The neutral of an ac power distribution system is to be grounded to the earth electrode subsystem at the first service disconnect as well as to the ground terminal at the secondary distribution transformer. For separate facilities served by a common distribution system, each disconnecting means should be grounded to the earth electrode subsystem common to the facility. This connection may be lifted if noise or hum problems are encountered. At separate facilities having a common earth electrode subsystem, each service disconnecting means should be grounded to the closest point on the earth electrode subsystem.

b. All distribution neutrals are to be isolated from equipment and structural elements except for the connection at the first service disconnect.

c. Connect the ground terminals of convenience outlets to the facility ground system with the green wire specified by the NEC. Do not use wire mold or plug mold distribution strips which depend upon serrated or toothed fingers for grounding. Effectively ground the ground terminals on such strips with auxiliary grounding conductors equivalent to the green wire requirements of Table 250-95 of the NEC.

d. For a dc power system, ground one leg with a single connection to the earth electrode subsystem. The size of the grounding conductor should conform to the requirements of the NEC. Whether grounded at the source or at the load, provide a dedicated current return conductor from the load to the source to assure that the dc load current in the facility ground system or the lower frequency signal ground network is minimized.

1.4.7 Standby AC Generators. The frames and housing of ac generators should be grounded as prescribed by the NEC. Ground the neutral to the facility main ground plate or to the earth electrode subsystem, whichever is closest, When generators are connected in parallel, interconnect the neutrals and ground them to the facility's earth electrode subsystem with a common grounding conductor.

1.4.8 Equipment Fault Protection Subsystems for Transportable Equipment.

a. To protect personnel from exposure to hazardous voltages, all exposed metal elements of equipment and supporting' structures shall be interconnected by a green wire from the ac power distribution system and referenced back to the power source. The grounding requirements of a transportable facility installed in the field and operating from transportable engine generators is relatively simple. The primary requirement is to ensure that (1) all vans, vehicles, traders, and engine generator units are interconnected through a protective (green wire) network, and (2) the power neutral is grounded from a common bus that is connected to an earth electrode at tile generator. Where parts are movablc or subject to vibration, metal straps may be used in lieu of the green wire.

b. When transportable facilities are powered from a commercial base ac source or are integrated into a permanent installation with nontransportable facilities, personnel protection requirements become more complex. When part of a fixed installation, the transportable system shall be integrated into the facility ground system by extending the earth electrode subsystem to provide connections for the transportable facility. All metallic components of the facility shall be interconnected through the equipment fault protection subsystem and bonded to the earth electrode subsystem at the main power panel, or back to the primary power source through the ground conductor of the power distribution cable.

1.4.9 MIL-STD-188-124A and NEC Commpliance Evaluation.

1.4.9.1 Measurements. This portion of the survey is performed to determine if the facility complies with the requirements of the MIL-STD-188-124A as applicable to military installations in regard to grounding, bonding, and shielding. Powerline and equipment grounding conductor current measurements, not related to the NEC, are made at the time of the survey for convenience. Survey form contained in Section 2.2.2.4 Part IV is provided. Guidance in making the current measurement is provided in Sections 2.3.2.4 and 2.3.3 Part IV. Prepare sketches, as appropriate, that may aid in explaining the results of the survey or illustrating the installation. Attach the sketches to the survey data.

a. The verification required by some steps may involve more than an inspection. For example, in verifying that all neutral conductors are color-coded white or natural gray, if a green colored wire is found connected to the neutral bus it will be necessary to trace out the conductor to determine its proper function. If the verification is not accomplished at the time of the inspection, the discrepancy should be recorded on the data sheet and noted as a potential violation.

b. During the inspection, it may be desirable to correct a deficiency at that time (e.g., cleaning a bond area of paint). In such cases, record the discrepancy on the data sheet and note the corrective action taken.

1.4.9.2 MIL-STD-188-124A and NEC Compliance Inspection.

Note: Sections a(l), a(9), d(9), and d(15) are not MIL-STD-188-124A or NEC requirements but are for information.

a. Service entrance. Perform the following to determine that wiring at service entrances is in accordance with MIL-STD-188-124A requirements.

(1) Determine if the input to the facility, from the power company, is single phase or three phase, If three phase is delta or wye, and if one of the service conductors is identified (grounded). The identified conductor will be the neutral.

(2) Verify that each run of cable, conduit, etc., contains all phases and the identified conductor and that each identified conductor is grounded at or in the vicinity of and ahead of the service disconnecting means. For example, if the source is a transformer whose secondary is a 3-phase, 4-wire wye with the neutral grounded and the power is routed to the service disconnect switch through 3 conduits, each conduit must contain all 3 phases and neutral, and the neutral must be grounded in the vicinity of the service disconnect switch.

(3) For each building or service supplied by a single source, verify that the identified conductor is routed to each service disconnect switch and that the conductor is connected to the earth electrode at each building with a grounding electrode conductor that meets the requirements of Table 1-20.

(4) If the grounding electrode conductor is routed through a metallic enclosure (conduit, etc.), verify that the enclosure is bonded to the conductor at both ends.

Note: It may not be possible to verify this connection at the electrode end as it may be inaccessible.

(5) Verify that the color of the identified conductor is white or natural gray. If larger than a No. 6 AWG and of a different color (not green), it should be reidentified white or natural gray with paint or tape, or by other means such as tags or labels.

(6) Verify that the equipment grounding conductors ("safety" or "green" wire) are green or green with one or more stripes, or if larger than No. 6 AWG and of a color other than green, not white, has been reidentified with green tape, paint, or other means.

(7) Verify that all metal noncurrent carrying service equipment is effectively bonded by one of tile methods specified below and that all non-conductive coating in the bonding path has been removed:

(a) Bonding jumpers connected by pressure connector, clamps, or other means.

(b) Threaded couplings and threaded bosses on enclosures with joints that are tight when rigid conduit is involved.

(c) Threaded coupling used for metallic tubing and rigid conduit is tight.

(d) Bonding jumpers are used around knockouts that are punched or otherwise formed so as to impair the electrical connection.

(e) Bonding-type locknuts and bushings on other devices.

(8) Verify that all covers for wireways, junction and pullboxes, surface raceways, etc., are installed and secured.

(9) Using a clamp-on ammeter, measure the current in each phase conductor and the identified service conductors. Also measure the current in the grounding electrode conductor. Record the current levels and wire sizes on Part IV of the survey form in Chapter 2.

b. Separately derived power sources. For premises derived sources, (a premises wiring system with power derived from an on-site generator, transformer or converter windings that have no direct electrical connection to supply conductors originating in another system) perform the following for each source.

(1) Verify that the neutral conductor is grounded where the following exists:

(a) AC circuits of less than 50 volts (peak to peak) where:

1. Supplied to transformers if the transformer supply system exceeds 150 volts (peak to peak) to ground.

2. Supplied by transformers if the transformer supply system is ungrounded.

3. Installed as overhead conductors outside of buildings.

Table 1-20. Grounding Electrode Conductor Size

Size of Largest Service-Entrance Conductor or Equivalent for Parallel Conductors (AWG)		Minimum Size of Grounding Electrode Conductor (AWG)	
Copper	Aluminum or Copper-Clad Aluminum	Copper	Aluminum or Copper-Clad Aluminum[1]
2 or smaller	0 or smaller	8	6
l or 0	2/0 or 3/0	6	4
2/0 or 3/0	4/0 or 250 MCM	4	2
Over 3/0 thru 350 MCM	Over 250 MCM thru 500 MCM	2	0
Over 350 MCM thru 600 MCM	Over 500 MCM thru 900 MCM	0	3/0
Over 600 MCM thru 1100 MCM	Over 900 MCM thru 1750 MCM	2/0	4/0
Over 1100 MCM	Over 1750 MCM	3/0	250 MCM

NOTE: Where the service conductors or the equivalent size of parallel conductors exceed 1100 MCM, the size of the grounding electrode conductor shall not be less than 12-1/2 percent of the area of the service conductor(s).

[1]Aluminum or copper-clad aluminum grounding conductors shall not be used where in direct contact with masonry or the earth or where subject to corrosive conditions. Where used outside, aluminum or copper-clad aluminum grounding conductors shall not be installed within 45 cm (18 inches) of the earth.

(b) The source can be grounded such that the maximum voltage to ground on the ungrounded conductors does not exceed 150 volts.

(c) Where the source is nominally rated 480/277-volt, 3-phase, 4-wire wye in which the midpoint of one phase is used as a circuit conductor.

(d) Where the source is nominally rated 240/120-volts, 3-phase, 4-wire wye in which the midpoint of one phase is used as a circuit conductor.

(e) Where a grounded service conductor is uninsulated.

(2) Where a source is grounded, verify that the installation complies with 1.4.9.2b(l). Also see Article 250-26 of the NEC.

c. Power transfer and bypass switches. If the facility contains power transfer and/or bypass switches, perform the following for each switch:

(1) Verify that an identified conductor, if used, is brought into the switch from each power source.

(2) Verify that the identified conductors are not grounded within the switch.

(3) Verify that the identified conductors are white or natural gray. If larger than No. 6 AWG and of another color (not green), it should be reidentified white or natural gray with paint or tape or by other means such as tags or labels.

(4) Verify that all raceways, conduits, enclosures, etc., are adequately grounded.

(5) Verify the phase, identified and grounding conductors brought into the switch from each source are routed together.

(6) Verify that output phase, identified and grounding conductors are routed together.

d. Power panels. For power panels, excluding service entrance, verify the conditions listed below. In some instances, steps 11 through 14 may be more readily accomplished by working back from the equipment or load end.

(1) Verify that the phase, identified and equipment grounding conductors are routed into the panel together through the same conduit, raceway, cable, etc.

(2) Verify that the identified conductor is connected to the neutral bus.

(3) Verify that the neutral bus is not grounded.

(4) Verify that all wires connected to the neutral bus are white or natural gray or if larger than a No. 6 AWG and of a different color, not green, have been reidentified with white or natural gray paint or tape or by other means such as tags or labels.

(5) Verify that no green, white or natural gray wires are used as phase conductors, or if white (but not green), have been reidentified with paint, tape, tags, or labels.

(6) If an equipment grounding conductor is a separate conductor brought into the panel, verify that it is bare, or if insulated, that it is green, or green with one or more stripes, or if larger than a No. 6 AWG and of another color, not white, it has been reidentified with paint, tape, or tags.

(7) If the equipment grounding conductor is an insulated or bare wire, verify that it is connected either to the ground bus or if the bus does not exist, that it is connected to the frame of the panel with UL-approved connectors.

(8) The equipment grounding conductor is a separate conductor, must be run in the same conduit as the feeder, and should be wrapped around the insulated conductors.

(9) Using a clamp-on ammeter, measure the current in each input phase, the identified conductor, and the equipment grounding conductor. Record the data on Part IV of the survey form in Chapter 2.

(10) Verify that bonds in the ac or dc power systems are not dependent upon solder for their electrical and mechanical connections. Solder may be used only to supplement mechanical connections to lower the overall impedance in RF/signal circuits or subsystems.

(11) Verify that all related phase and equipment grounding conductors ("safety grounds") to all circuits supplied by the panel are routed through the same conduit, raceway, cable, etc.

(12) Verify that all separate equipment grounding conductors leaving the panel are green or green with one or more yellow stripes or bare. If larger than No. 6 AWG and of another color, not white, they shall be reidentified with paint, tape, tags, or other means at each end and at all places where the conductor is accessible. Bare conductors should not be utilized where EMI or TEMPEST must be considered.

(13) Verify that the equipment grounding conductor for each circuit is at least as large as that given in Table 1-21 based upon the size of the overcurrent device protecting the circuit phase conductors.

(14) Verify that all bonding connections are made through surfaces that have been cleaned of insulating finishes or by some method, i.e., gouging locknuts fully tightened, that inherently accomplishes the same result.

(15) Using a clamp-on ammeter, measure the current in each equipment grounding conductor leaving the panel. Record the current on Part IV of the survey form in Chapter 2.

e. Wireways, raceways, cable trays. For all wireways, raceways, cable trays, etc., verify the following.

(1) All covers, where applicable, are in place and properly secured.

(2) All sections are electrically connected, and any insulating finishes in the bonding path have been removed.

(3) If the wireway, raceway, cable tray, etc., contains neutral or equipment grounding conductors that have been reidentified, verify that reidentification is accomplished at various intervals throughout their length.

f. Equipment. For all equipment, verify the items listed below. In some instances, verification may require that the equipment be shut down.

Table 1-21. Equipment Grounding Conductor Size Requirement

Rating or Setting of Automatic Overcurrent Device of Equipment Circuit.	Size	
Amperes	Copper Wire No.	Aluminum or Copper-Clad Aluminum Wire No.
15	14	12
20	12	10
30	10	8
40	10	8
60	10	8
100	8	6
200	6	4
400	3	1
600	1	2/0
800	0	3/0
1000	2/0	4/0
1200	3/0	250 MCM
1600	4/0	350 MCM
2000	250 MCM	400 MCM

(1) Where the equipment grounding conductor is a separate conductor, verify that the conductor is routed through the same conduit, raceway, etc., as the phase and neutral conductors.

(2) Verify that the equipment grounding path back to the power panel is continuous and that any insulating finishes in the grounding path have been removed.

(3) Verify that the size of the equipment grounding conductor is at least as large as that listed in Table 1-21 for the overcurrent device serving the equipment.

(4) Verify that the neutral is not connected to the chassis or frame of the equipment. This may be verified visually or with an ohmmeter.

g. Isolation of neutral conductor. When it is possible to deenergize a facility, or a portion thereof, perform the following test:

(1) With the electrical power removed disconnect the facility neutral from ground or in the case of a portion of the facility (e.g., a power panel) the incoming neutral. See Figure 1-47.

(2) Measure the resistance between the neutral bus and the equipment grounding conductor or panel frame. A low value of resistance (< 10 ohms) indicates that the neutral may be grounded at some place other than at the first service disconnect. Grounding of the neutral at places other than at the first service disconnect violates the MIL-STD-188-124A and the NEC and will result in power current flow through the equipment ground network.

1.4.9.3 Correction of Deficiencies. The results of the survey should be thoroughly reviewed to determine the overall impact of correcting the deficiencies. complete and strict compliance with the requirements of MIL-STD-188-124A and the NEC is required. However, some corrections could be expensive and not result in any improvement in the operation of the facility. Some types of deficiencies should be corrected. Presented below is a listing of violations that could be encountered and possible corrective actions.

a. Undersized equipment grounding conductor, replace with proper size conductor.

b. Equipment grounding conductor and/or neutral conductor not routed with phase conductors. Reroute the grounding and/or neutral conductor to be in the same raceway as the phase conductors.

c. Equipment is not grounded by means of an equipment grounding conductor meeting the requirements of 1.4.9.2d(7) or 1.4.9.2d(8) but is grounded by means of its installation (e.g., mounted in a rack). Ground the equipment by means of a separate green or identified conductor routed with the phase and neutral conductors.

d. Neutral bus in power panel (other than service entrance) is grounded to the panel frame. Remove the grounding connection.

e. A green wire connected to the neutral bus is found to be connected to an equipment chassis and is supposed to be the equipment conductor. Disconnect the conductor from the neutral bus and reconnect it to the ground bus or panel frame with UL-approved connectors.

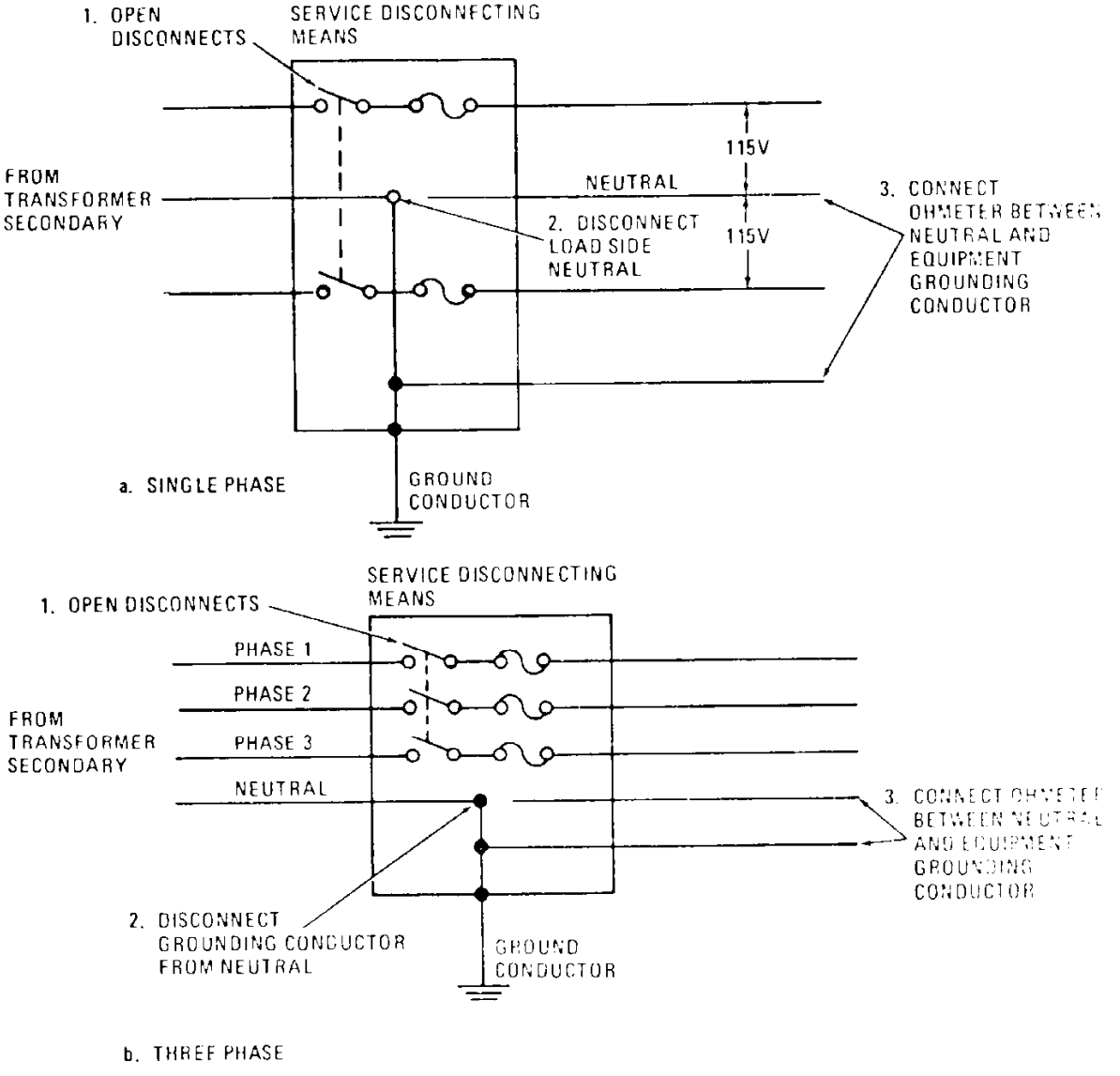

Figure 1-47. Method for Determining the Existence of Improper Neutral Ground Connections

f. Bond is obtained through a painted surface. Disassemble, remove paint and reassemble. Protect with waterproof paint if exposed to moisture.

g. A black wire, not reidentified, is found to be used as an equipment grounding conductor. If it is larger than a No. 6 AWG, it may be reidentified with green paint or tape or by other means at each end and wherever accessible. If smaller than No. 6, it should be replaced to comply with the NEC. However, an acceptable substitute would be to reidentify it with green paint or tape if replacement is impractical or expensive.

h. Grounding conductor is routed through conduit and the conduit is not grounded. Ground the conduit at both ends by means of a grounding bushing or clamp, a jumper wire, and a split-bolt connector. The jumper wire is to be the same size as the grounding conductor.

i. Service neutral is not grounded but equipment enclosure is grounded by means of a grounding conductor. Ground the neutral by connecting it to the grounding conductor/bus in the first service disconnect.

j. Conductor insulation is damaged and conductor is exposed. Conductor should be replaced. Alternate correction is to cover the damaged area with insulating tape until the insulation of the repaired area is equal to the insulation of the conductor.

k. Power panel is grounded by a soldered connection. Provide supplemental grounding by means of a bolted grounding connector.

l. Ground bus is not grounded and equipment grounding conductors terminate at equipment frame, not at receptacles. Connect ground bus to panel frame by means of UL-approved connectors.

m. Raceway contains neutral and grounding conductors of different systems (e.g., commercial and regulated power) and conductors are not distinguishable. Distinguish conductors from each other by means of paint, tape or tags. Alternately, tie the phase, neutral and equipment grounding conductors of each system together.

1.5 SIGNAL REFERENCE SUBSYSTEM FOR NEW FACILITIES.

1.5.1 Higher Frequency Network. The higher frequency network is a conductive sheet, grid, or cable network mesh providing multiple low resistance paths between any two points within the structure and between any point in the structure and the earth electrode subsystem. It consists of three primary components: (1) equipotential plane, (2) equipment ground conductors, and (3) structural steel elements and electrical supporting structures, (see Figures 1–49, 1-50, and 1-51) connected to the earth electrode subsystem. The grounding (green) wire sha1l not be considered a substitute for this subsystem. The optimum interconnecting cable and mesh spacing of the equipotential plane should be 1/8 of a wavelength with regard to the highest frequency of concern. In practice this may not be feasible and the interconnecting cable and mesh spacing should therefore be as short and small as practical.

THIS PAGE INTENT1ONALLY LEFT BLANK

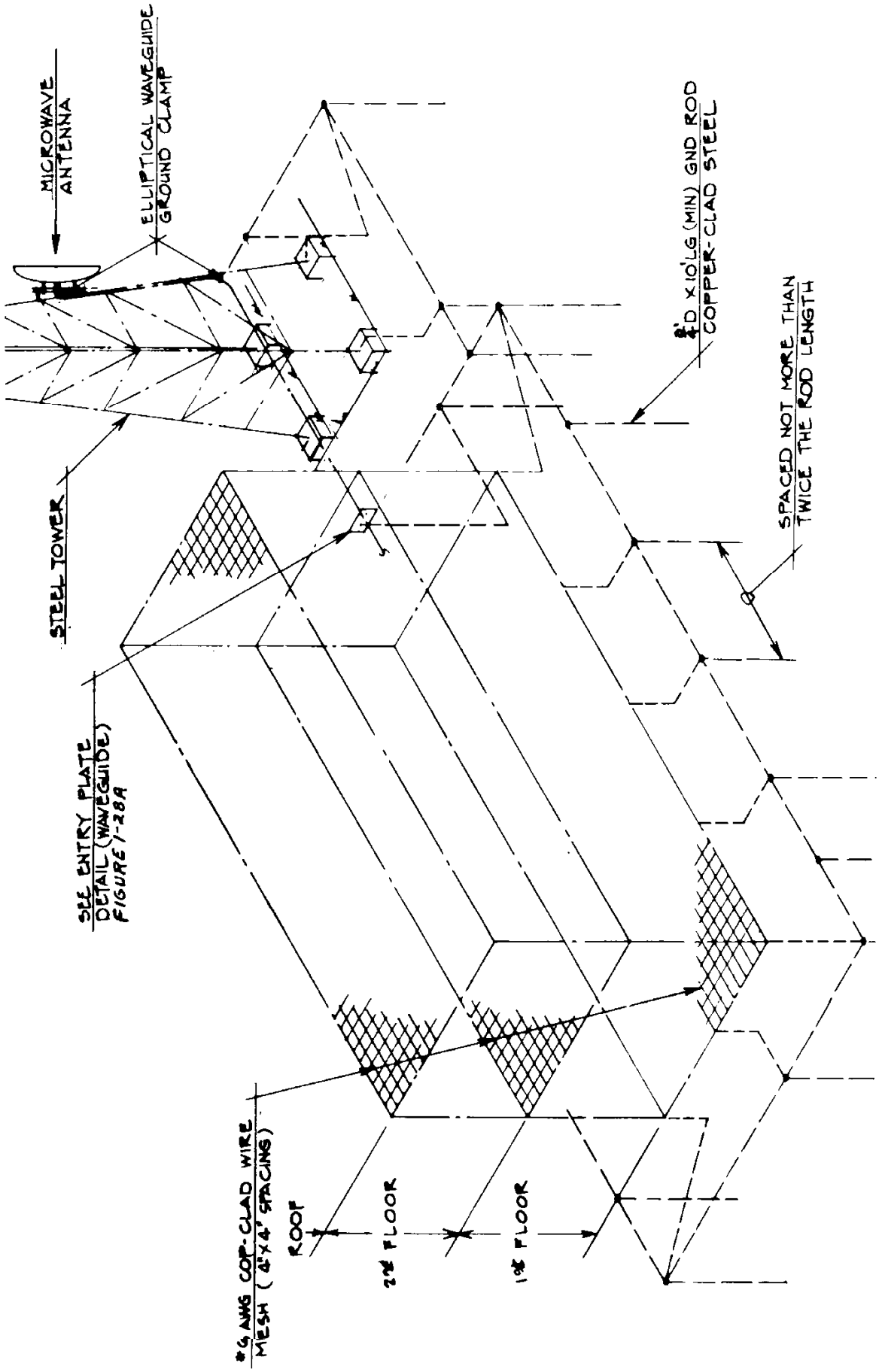

Figure 1-49. Typical Equipotential Ground Plane for Multi-Deck Building

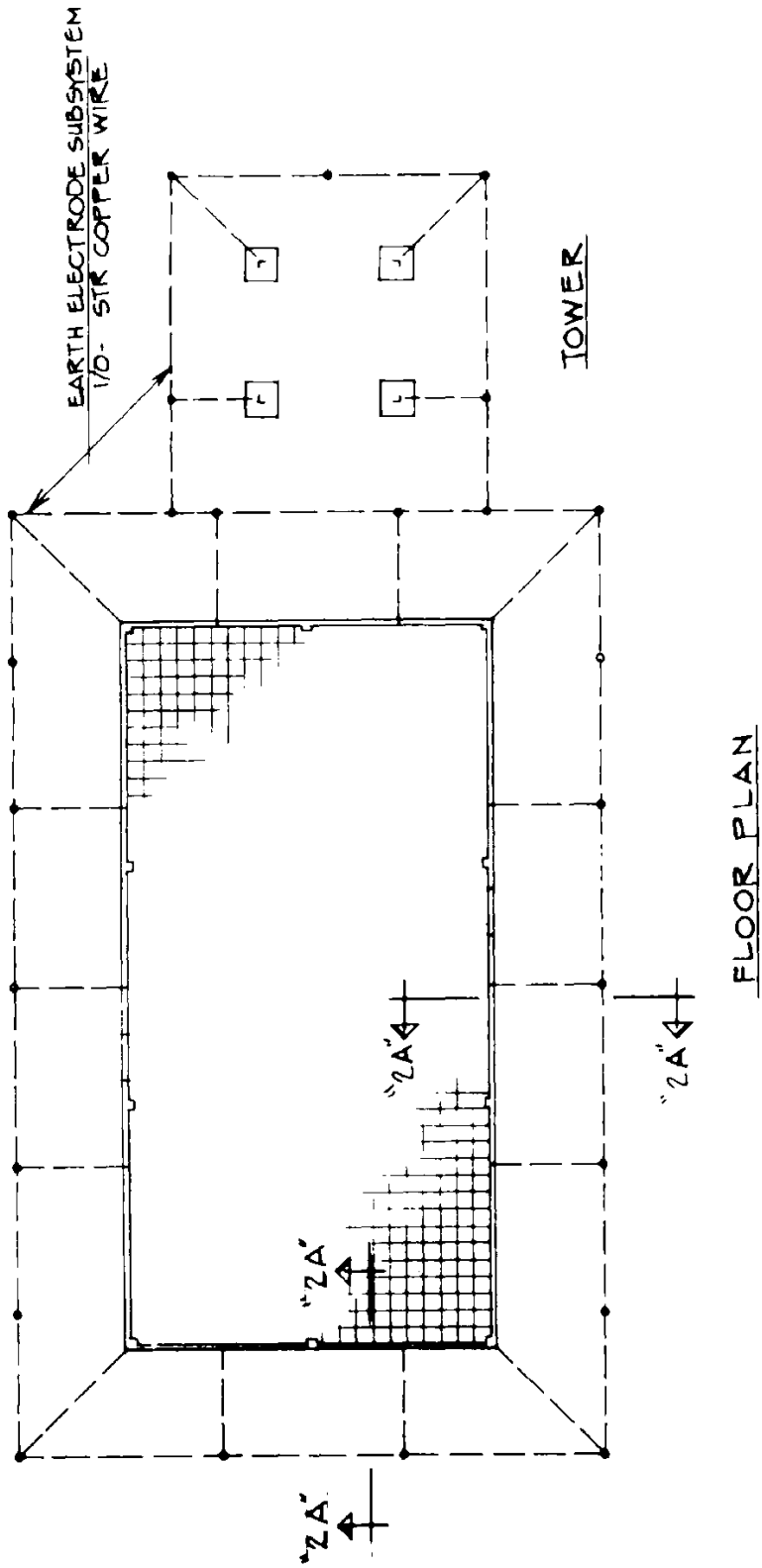

Figure 1-50. Typical Building Floor Plan (Top View)

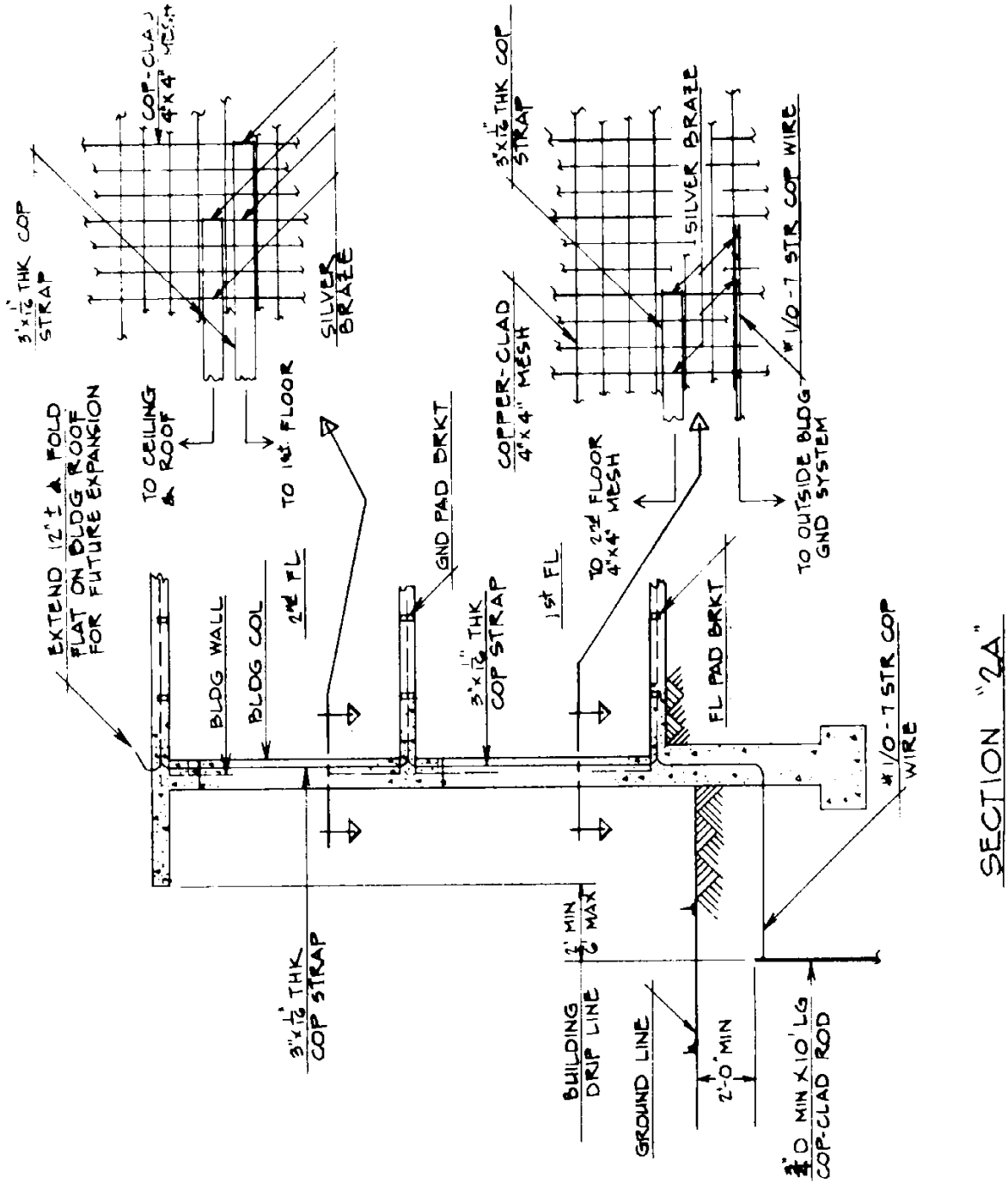

Figure 1-51. Typical Multi-Deck Building Plan (Side View)

a. In steel frame buildings, make all structural members of the building (e.g., building columns, wall frames, roof trusses, etc.) electrically continuous by bonding each joint and interconnection with a welded, brazed, soldered, or high–compression bolted connection. Where direct bonds of these types are not possible, bridge the joint with a l/0 AWG stranded copper cable both ends of which are brazed, welded, or bolted in place. This does not include rebars.

b. Connect the bonded structural steel network to the earth electrode subsystem with 1/0 AWG copper cables. The distance between adjacent connections from the building structure to the earth electrode subsystem should not exceed 15 meters (50 feet).

c. Where steel frame construction is not used, install a supplemental network consisting of large copper cables conforming to Table 1-22.

d. Equipment cabinets, electrical supporting structures, and utility pipes are to be connected to this structural steel or copper cable grid (equipotential plane) with #6 AWG copper wire. This interconnecting wire should be as short as feasible, preferably not over 24 inches to minimize high frequency reactance. (Electrical supporting structures include all the conduit, raceways, switch and breaker panels, and other hardware (not energized) commonly associated with the communication electronic facility.)

1.5.1.1 Multipoint Ground System, The multipoint ground system requires the existence of an equipotential ground plane for the system. Such an equipotential plane exists in a building with a metal floor or ceiling grid electrically bonded together, or in a building with a concrete floor with a ground grid embedded in it, connected to the facility ground. Equipment cabinets are then connected to the equipotential plane. Chassis are connected to the equipment cabinets and all components, signal return leads, etc., are connected to the chassis. The equipotential plane is then terminated to the earth electrode subsystem to insure personnel safety and a low impedance path for lower frequency signals.

At higher frequencies, the large conducting surface, embedded in the floor or the metallic raised floor under the equipments to be grounded, presents a much lower characteristic impedance than a signal wire, even if both were improperly terminated. This is true because the characteristic impedance (Z_0) is a function of L/C. As capacity to earth increases, Z_0 decreases. Normally, the capacity of a metallic sheet to earth is higher than that of wire. If the size of the sheet is increased and allowed to encompass more area, the capacitance increases. Also, the unit length inductance decreases with width, which further decreases Z_0. If the dimensions of a metallic sheet increase extensively (as in the case of a conducting subfloor), the characteristic impedance approaches a very low value. In this case, even if improperly terminated, the impedance would be quite low throughout a large portion of the spectrum. This, in turn, would establish an equipotential reference plane for all equipments bonded to it. With this reference plane bonded to earth, the following advantages are obtained:

a. Any "noisy" cable or conductor connected to the receptor through or along such a ground plane will have its fiels contained between the conductor and the ground plane. The noise field can be "shorted out" by filters and bond straps because the distance between these "transmission line" conductors is very small. Shorting out the noise field has the desirable effect of keeping noise current from flowing over the receptor case and along any antenna input cables.

Table 1-22

Size of Equipment Ground Cables

Cable Size (AWG)	Maximum Path Length (FT)
750 MCM	375
600 MCM	300
500 MCM	250
350 MCM	175
300 MCM	150
250 MCM	125
4/0	105
3/0	84
2/0	66
1/0	53
1	41
2	33
4	21
6	13
8	8
Busbar (IN.)	
4 x 1/4	636
4 X l/8	318
3 x 1/4	476
3 X 1/8	238
2 x 1/4	318
2 X 1/8	159
2 X 1/16	79
1 x 1/4	159
1 X 1/8	79
1 X 1/16	39

b. Filters at the interface terminals of equipment can operate more effectively when both terminals of their equivalent "transmission line" are available. As in a, above, a large conducting surface makes it possible to contain the field carried by the offending conductor, in such a way that it can be more easily prevented from traveling further.

c. A large conducting surface will also provide isolation between any rooftop antennas and from cable runs below it.

1.5.1.1.1 Types of Equipotential Planes. Conducting media that can be utilized for the equipotential plane are (a) a copper grid embedded in the concrete floor or raiscd metal floor such as computer floor, (b) a subfloor of aluminum, copper, phospher bronze screen or sheet metal laid underneath the floor tile or carpet, or (c) a ceiling grid above tile equipment. The grid openings should not be larger than 1/20 wavelength at the highest frequency of concern up to four inches. As a design objective (DO) the grid openings should not be larger than four inches. The following equipotential planes may be utilized on new facilities or those facilities undergoing a major rehab, or upgrading of communications electronics equipments.

1.5.1.1.1.1 Copper Grid Embedded in Concrete. Since a large solid conducting surface is not economically feasible for some installations, a ground reference plane, made up of a copper grid, or copperclad construction mesh with 4 inch openings may be embedded in the concrete with ground risers installed to the surface of the concrete as shown in Figure 1-54. The mesh is commercially available in AWG wire sizes Nos. 6, 8, 10, and 12. It is normally furnished in 3.7m (12 foot) rolls, but can be obtained in various widths up to 5.5m (18 feet). See Figure 1-52. Where sections of mesh are joined together, there should be a one foot overlap and bonded together every two feet by welding, brazing, or manufactured connectors that are connected to the grid and give grounding access at the floor surface. See Figures 1-53, 1-54, 1-55, and 1-56. Normally, if the grid is embedded in a concrete floor, the latter method provides the easiest grounding source. The equipotential plane shall be welded to the main structural steel of the building at multiple locations. Where frame buildings are utilized the plane is connected to the earth electrode subsystem at multiple locations using 1/0 AWG copper conductors. If metal floor systems are used (metal floors with concrete poured over the floor) then the floor system itself can be used as the equipotential plane. In fact, this would be the preferred method of establishing the plane.

1.5.1.1.1.2 Equipotential Plane Under Floor Tile or Carpet. An equipotential plane can be realized by installing a metal sheet or roll of either aluminum, copper, or phospher bronze under the floor tile or carpet. This sheet may be either thin gauge solid metal or window screen type material bonded to the floor with mastic and tile or carpet installed on top of it. In existing facilities where equipments are already installed, the plane need not be installed under tile equipment cabinets, but must be bonded to the cabinets on all four sides. The plane shall be bonded to the main structural steel members of the building at multiple locations. The structural steel shall in turn be bonded to the earth electrode subsystem.

1.5.1.1.1.3 Overhead Equipotential Plane. Where it is not practicable to install a plane on the floor around the equipment, it is possible to install an overhead equipotential plane in or on the ceiling of the equipment room. This can be accomplished by installing either thin metal sheets or screen either above or on the ceiling. Care must be taken to keep bonding straps from the equipment to the plane as short as possible. Generally phospher bronze screen is used in this application because it is light, durable, and easy to work. The plane must be connected to the building steel which in turn is bonded to the earth electrode subsystem.

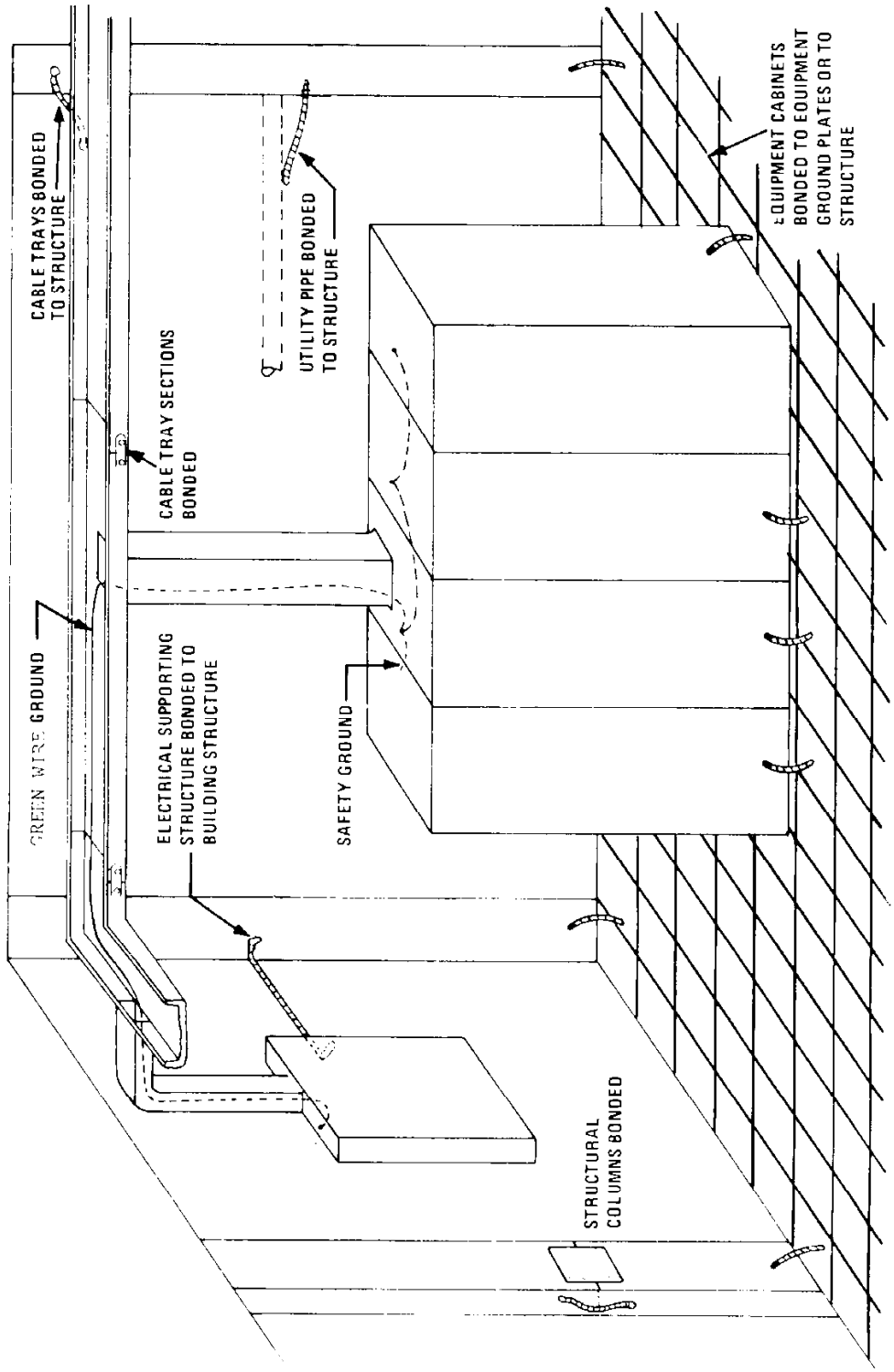

Figure 1-52. Elements of the Facility Ground System (with Grid)

1.5.1.1.1.4 Raised (Computer) Flooring. Raised floors are used to structurally support equipment cabinets and provide a space between the original facility floor and raised floor plates for cabling, air plenum or air conditioning ducting, piping, drains, etc. Raised floors provide an esthetic room appearance. Three general types of floor systems manufactured are: (a) the bolted-grid (stringer) or the rigid grid system, (b) the drop-in grid or removable grid type, and (c) the free–standing, stringerless or pedestal-only type. Only type (a) is acceptable as an equipotential plane.

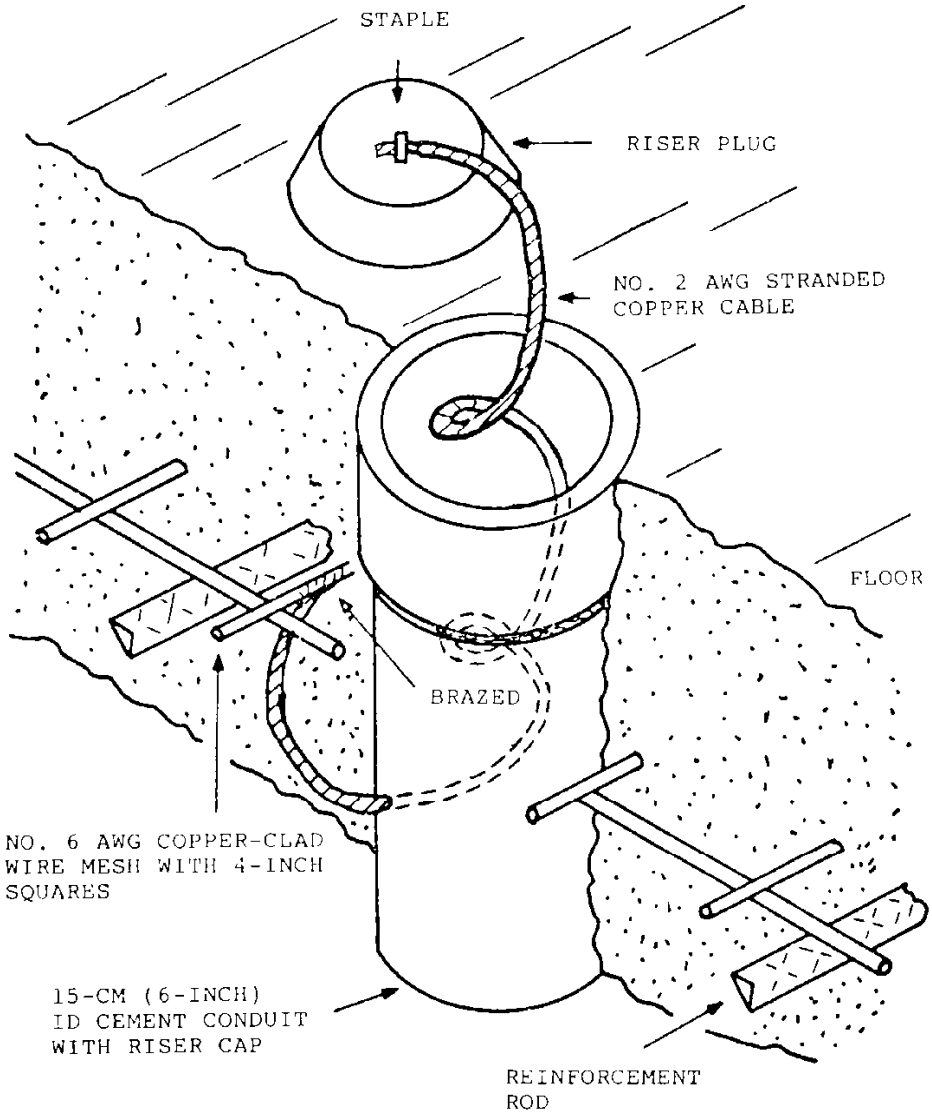

Figure 1-53. Typical Equipotential Ground Plane for New Construction
nigher or hybrid Frequencies Facilities Installation

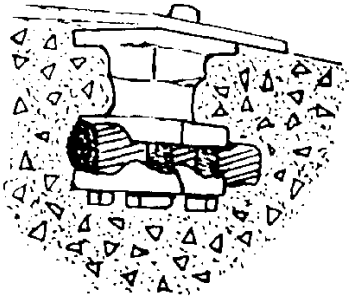

FOR FLAT BAR TO GROUND CABLE IN CONCRETE

USE: These Ground Connectors are attached to a ground cable (Equipotential plane) in the floor, and after the concrete is poured, a 2" X 2" flat plate is left exposed, flush with the finished surface. The connectors may be located at predetermined locations, or if set at intervals throughout the floor or wall base, a ground pad is always readily available for grounding electrical equipment. Contact surface of fitting is 2" square and comes with either two or four 1/8" D&T holes which can be used. for connection purposes. This equipotential plane is bonded to the earth electrode subsystem at numerous points.

Figure 1-54. Ground Connector for Equipotential Plane in Concrete

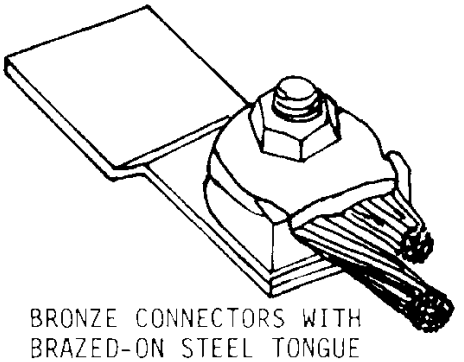

BRONZE CONNECTORS WITH
BRAZED-ON STEEL TONGUE
For Welding Steel Tongue
To Existing Structure

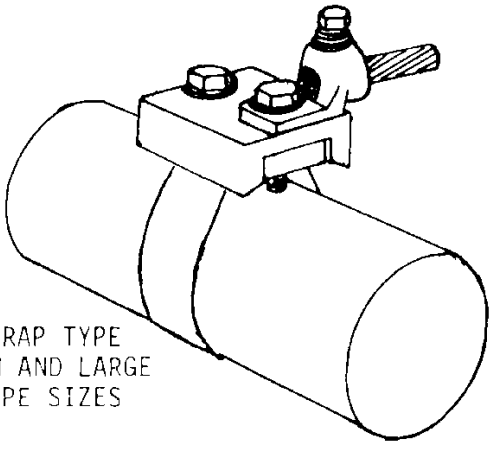

STRAP TYPE
MEDIUM AND LARGE
PIPE SIZES

NOTE: Bolts furnished will fasten connector to plate up to ¼" thick. Longer bolts will be furnished when required.

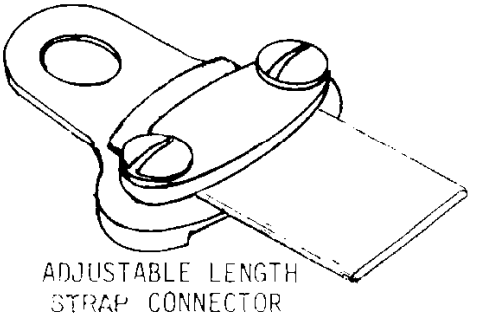

ADJUSTABLE LENGTH
STRAP CONNECTOR

Figure 1-55. Typical Ground Connectors

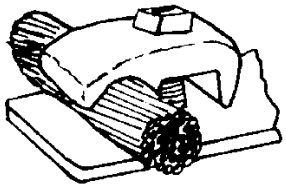

1 Piece Design

FOR CABLE TO
FLAT BAR

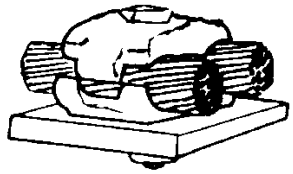

1 Bolt

FOR TWO PARALLEL
CABLES TO FLAT BAR

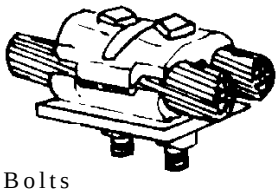

2 Bolts

FOR TWO PARALLEL
CABLES TO FLAT BAR

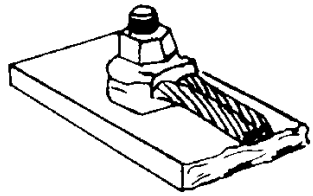

FOR CABLE TO
FLAT BAR

NOTE: Bolts furnished will fasten connector to plate up to ¼ " thick. Longer bolts will be furnished when necessary if plate thickness is specified.

Figure 1-56. Examples of Cable to Bar Ground Connectors

1.5.1.1.1.4.1 Bolted-Grid (Stringer) or Rigid Grid System Raised Floors. Shown in Figures 1-58, 1-59, and 1-60 arc bolted-grid floor systems. The systems are similar to the drop-in grid except the grids, when properly installed, are securely bolted or clamped in place. The drop-in panels must be metal or wood with metal plate on both sides with a selected floor covering. They should be no larger than 24" x 24". Although the panels may not make a good low resistance contact with the stringers, the high distributed capacity makes the floor appear to be an electrically continuous sheet at rf frequencies. The equipment cabinets shall be connected to the floor stringers by bonding straps which must be kept as short as possible. This will provide a low impedance path to earth at the lower frequencies. Materials used for stringers and pedestal heads are steel and aluminum. Raised flooring to be used for equipotential planes should be purchased to conform to the requirements of MIL-F-29046 (TD).

In general, the grounding aspects of raised flooring have been excellent. Problem areas that designers should be aware of are:

a. Installation practices. Inadequate bonded joints between pedestal heads and stringers have sometimes resulted from poor installation practices primarily due to:

(1) pedestal heads heavily oxidized and dirty when bolted,

(2) use of poor bolting hardware (speed nuts, sheet metal screws), or

(3) bolting hardware not installed or not properly tightened.

Clipnuts shall not be used in place of standard nuts since they generally will deform and therefore produce loose joints.

The installer may receive aluminum pedestal heads from the manufacturing plant that are heavily oxidized. The joint surface requires minor abrasion and perhaps a light coating of a joint protective compound. The joint compound should be particularly considered for non-carpeted floors where moisture, cleaning compounds and wax would settle, degrading the joint (sometimes severely) in a several year period.

The use of improper bolting hardware has caused unreliable joints. All bolted bonds must meet the requirements of Table 1-23. Sheet metal screws have on occasion been employed to support the stringer to the pedestal, Clipnuts employed in lieu of standard nuts will deform and in turn produce loose joints, and shall not therefore be used. This "clip" nut called the grip lock nut is shown in Figure 1-61. MIL-F-29046 has been modified to specifically prohibit the use of such type of hardware.

It is recommended that the installation crew be briefed and the floor tested, before the floor panels are installed.

b. Floor system checkout. Composite bonds between cabinet chassis and the raised floor shall not exceed a specified resistance value, usually 1 milliohm. Typically, a pedestal head to stringer resistance will read about 40 micro-ohms and should not exceed 100 micro-ohms. For additional information see MIL-F-29046,

c. Resistance measurement equipment. The instrument recommended to obtain resistance measurements of 100 micro-ohms for these measurements is a modified Shall cross Model 670A Milliohmmeter or equal.

THIS PAGE INTENTIONALLY LEFT BLANK

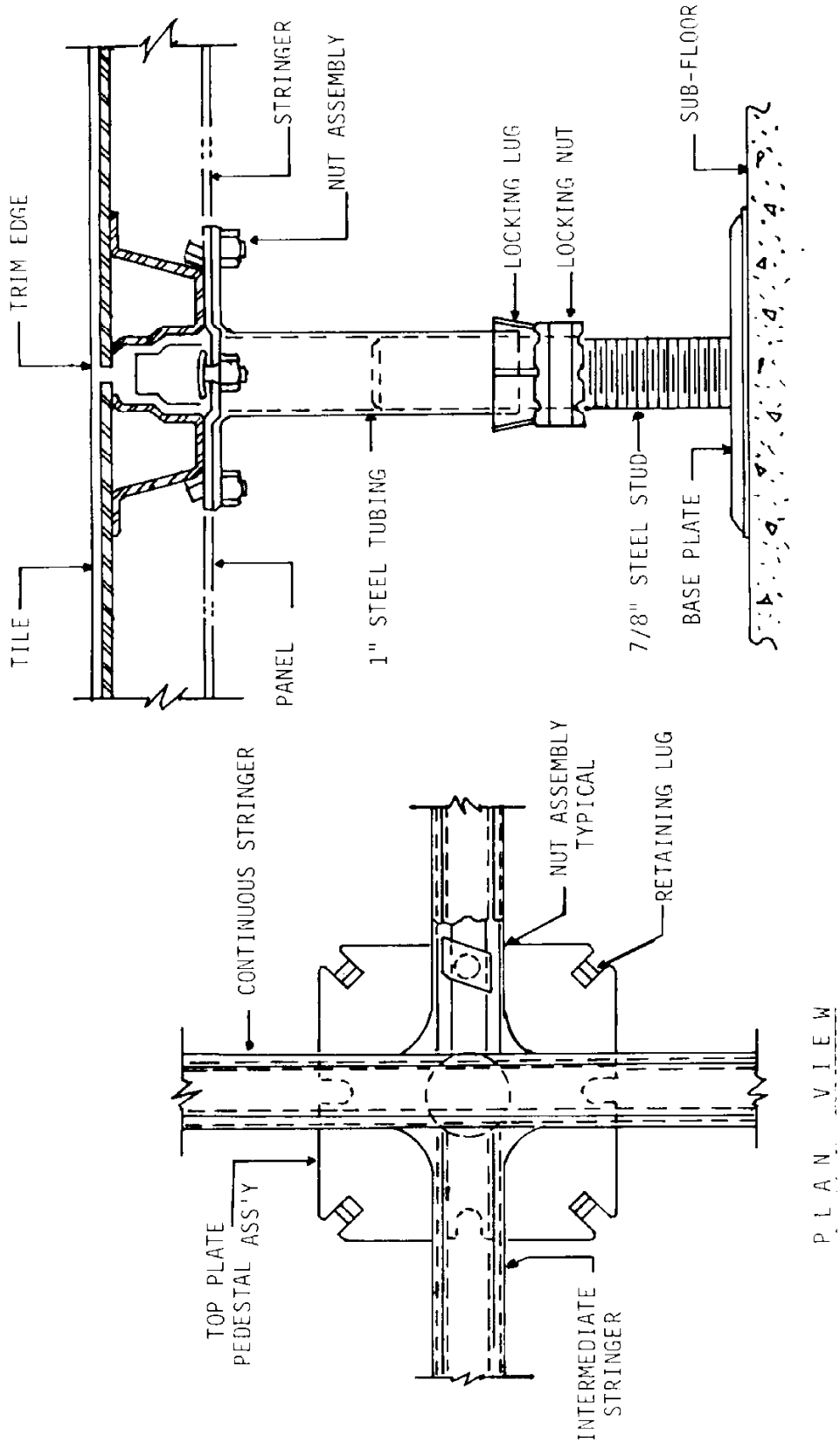

Figure 1-58. Rigid Grid Floor System Details

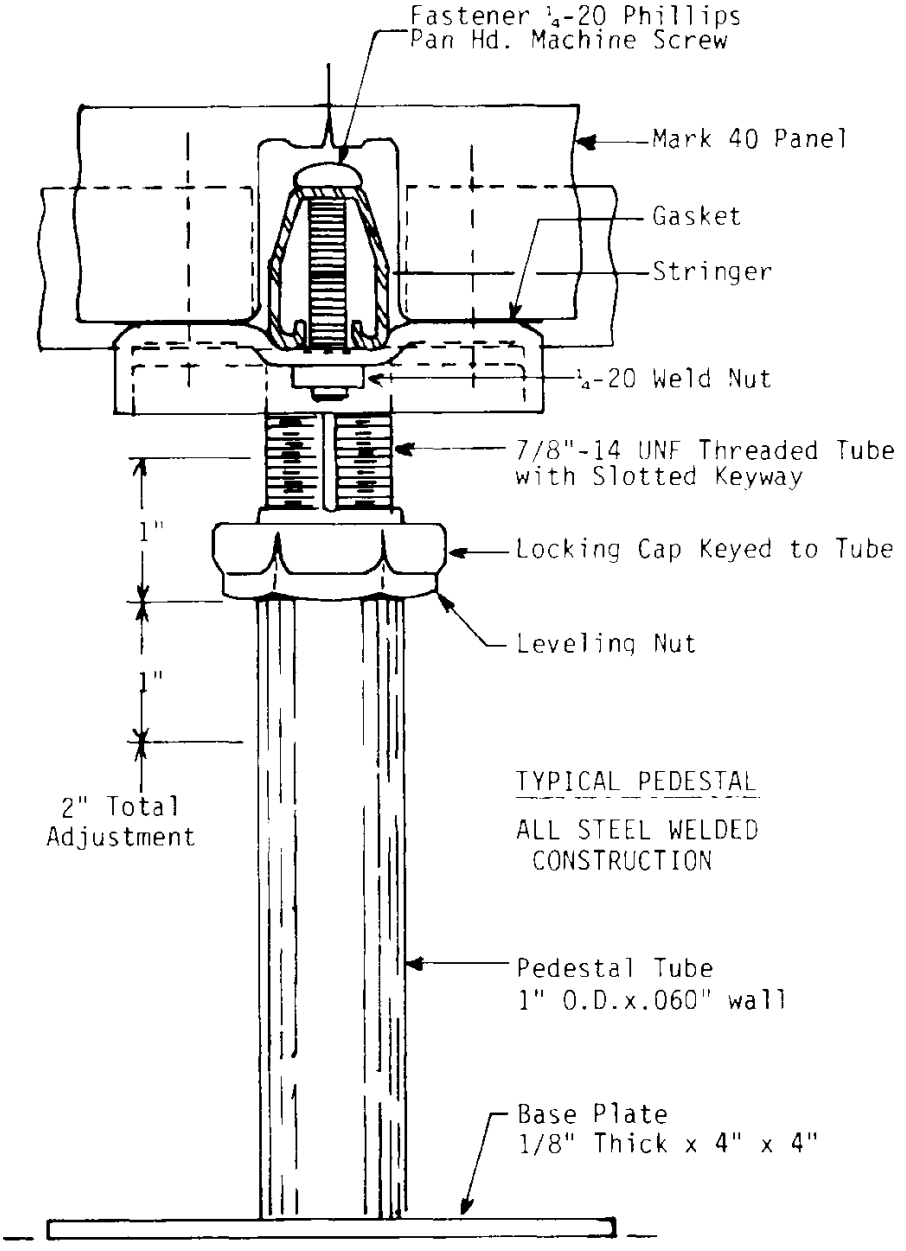

Figure 1-59. Example of Rigid-Grid to Pedestal Bolted Connection

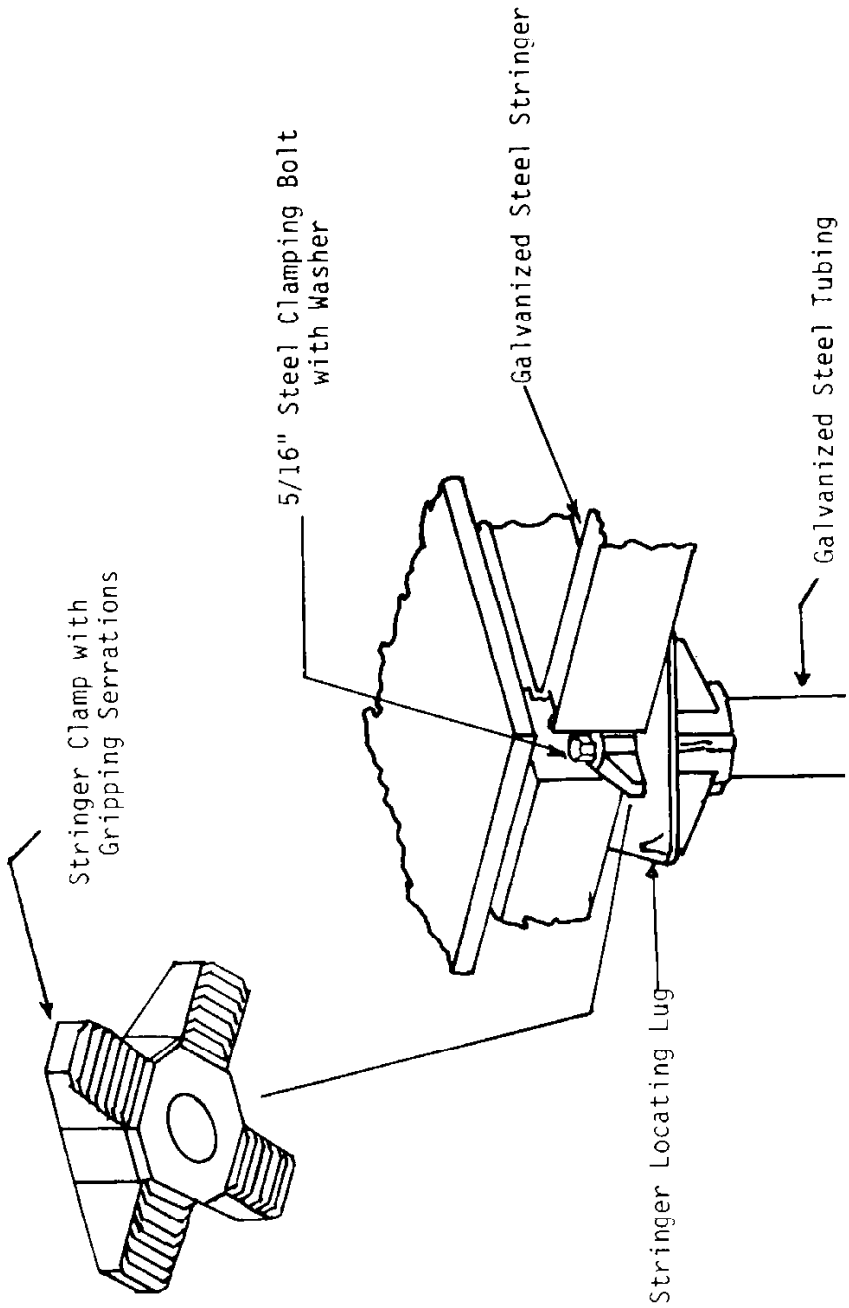

Figure 1-60. Example of Rigid-Grid to Pedestal Clamped Connection

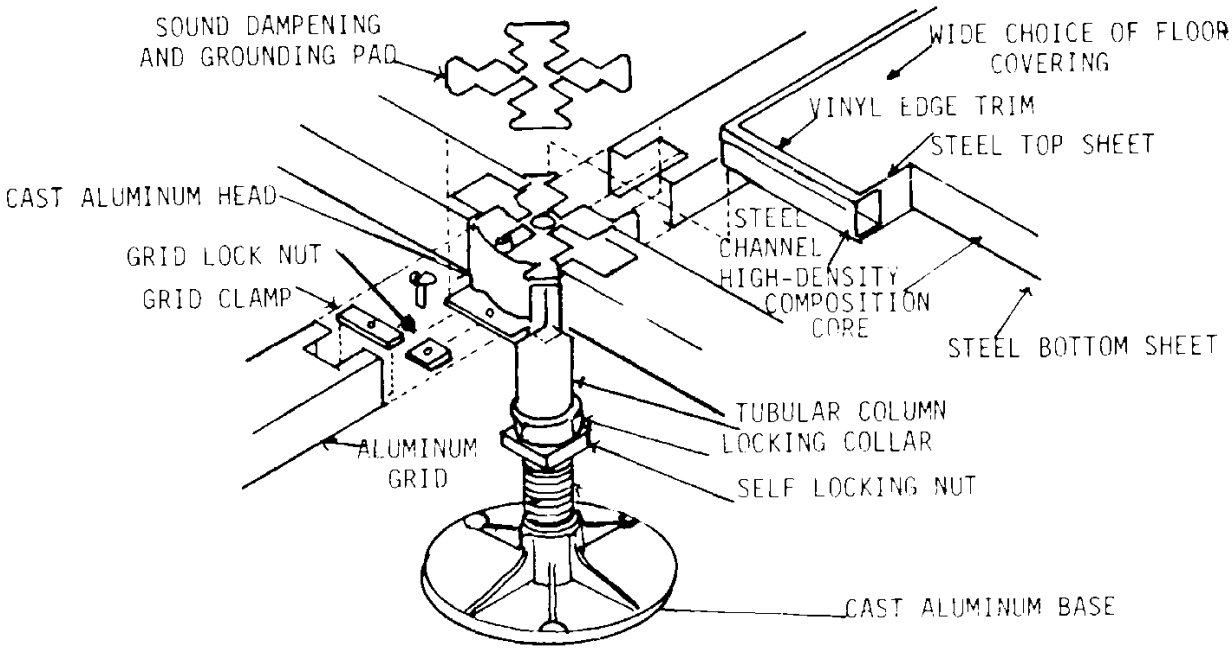

Figure 1-61. Example of Unacceptable Grid-to-Pedestal Bonding

d. Connections to the raised floor system. Connections from the equipment racks and the earth electrode subsystem to the floor are important. Clamps, if used, should be installed on the upper pedestal assembly to avoid the relatively high resistance between the lower assembly (that has the base) and the upper column. The stringer to pedestal fastener hardware can often be changed to allow bolting a bonding cable terminal directly to the pedestal head. It is feasible to obtain additional grid locking hardware and use it to bolt the bonding cable terminal to the floor grid. Another means of terminating a bonding cable is to drill a hole and bolt it to a non-heavy weight bearing stringer.

e. Corrosion control. In extremely humid environments where corrosion is common, the use of corrosion prevention compounds is recommended. Bolted joints can be covered with a non-corrosive silicone-rubber compound that will protect the joint for the life of the installation. An ice cube rubbed on the silicone-rubber will smooth it.

f. Carpeting. Carpeting selected as a floor-covering, should be of a low static or static-free type to prevent possible static discharge or component failure. See MIL-F-29046 for additional information.

g. Maintenance measurements. To determine degradation of the floor, resistance measurements and method should be documented and available so that repeat measurements can be made if ground reference subsystem problems are suspected or periodic checks for degradation made.

h. Reliability. The MIL-F-29046 specification provides information for raised floor procurements. The guidelines in this Handbook will provide a ground reference subsystem that is well-designed, properly installed and lasts for the life of the electronic system installation.

1.5.1.1.1.4.2 Drop-In or Removable Grid System. The Drop-In Grid System is shown in Figure 1-62. The grids or stringers are retained by engaging pins or depressions in the pedestal head. The stringers supply support and when newly installed provide comparatively low resistance contact to the pedestal head. Equipment cabinets resting on the floor panels provide increased contact pressure in certain areas, Severe corrosion and unreliable electrical contact have resulted due to dirt, moisture and floor cleaning/waxing compounds filtering through crevices. This floor system is also considered unsuitable for a reference plane. Floor panels resting on the pedestals and grids are commonly 24” x 24” although they may be purchased in 30” x 30” dimension.

1.5.1.1.1.4.3 Free-Standing, Pedestal-Only or Stringerless System. The pedestal-only system is shown in Figure 1-63. The pedestal base is glued or “shot” in place to form the basic understructure. The pedestal heads are leveled and the floor panel is installed. The conductivity between distant pedestals is variable and unreliable, making it unsuitable for a ground reference.

1.5.1.1.1.5. Ground Risers. The type of ground riser to be used depends on the type of equipotential plane to be installed and whether the subject building will be new construction, a major modification to an existing building in which new equipments will be installed, or an existing building in which only the ground system will be upgraded while the equipments remain in place. The latter case is discussed in Section 2.2.3.

1.5.1.1.1.6 Equipment Cabinet Grounding. Each individual unit or piece of equipment should either be bonded to its rack or cabinet (see Figure 1-64), or have its case or chassis bonded to the nearest point on the equipotential plane. Racks and cabinets should also be bonded to the nearest point of the plane.

1.5.2 Lower Frequency Signal Reference Network. Lower frequency signal reference subsystems are not to be installed in communications-electronics facilities.

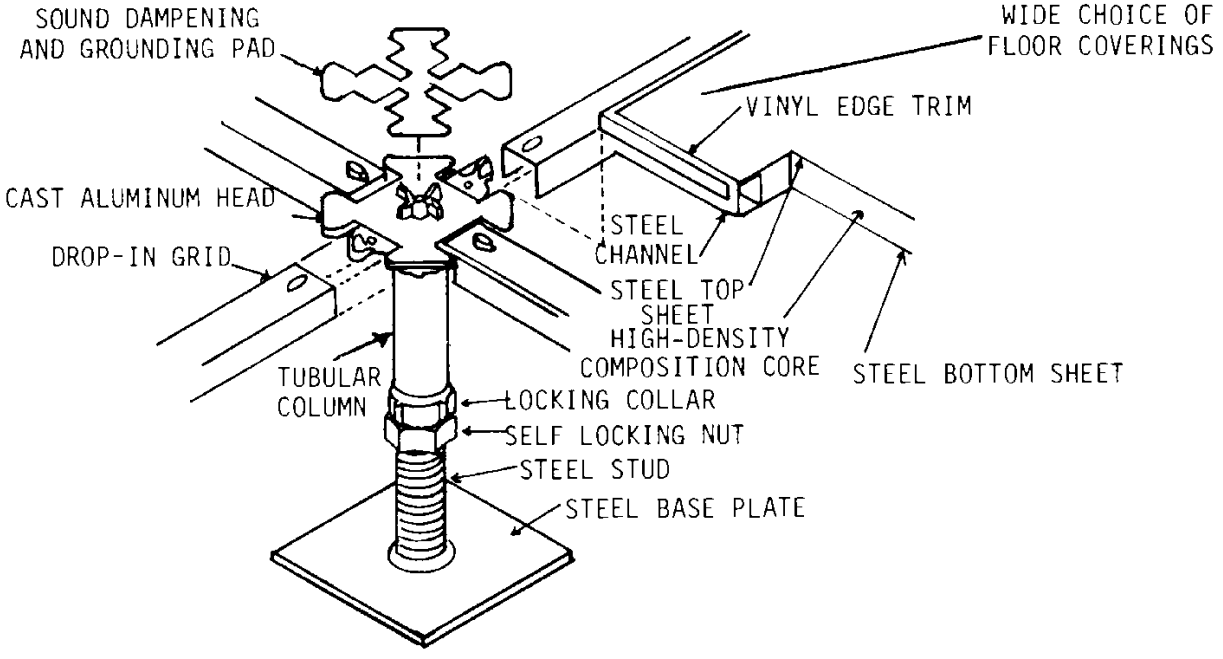

Figure 1-62. Example of Drop-In Grid Floor Construction

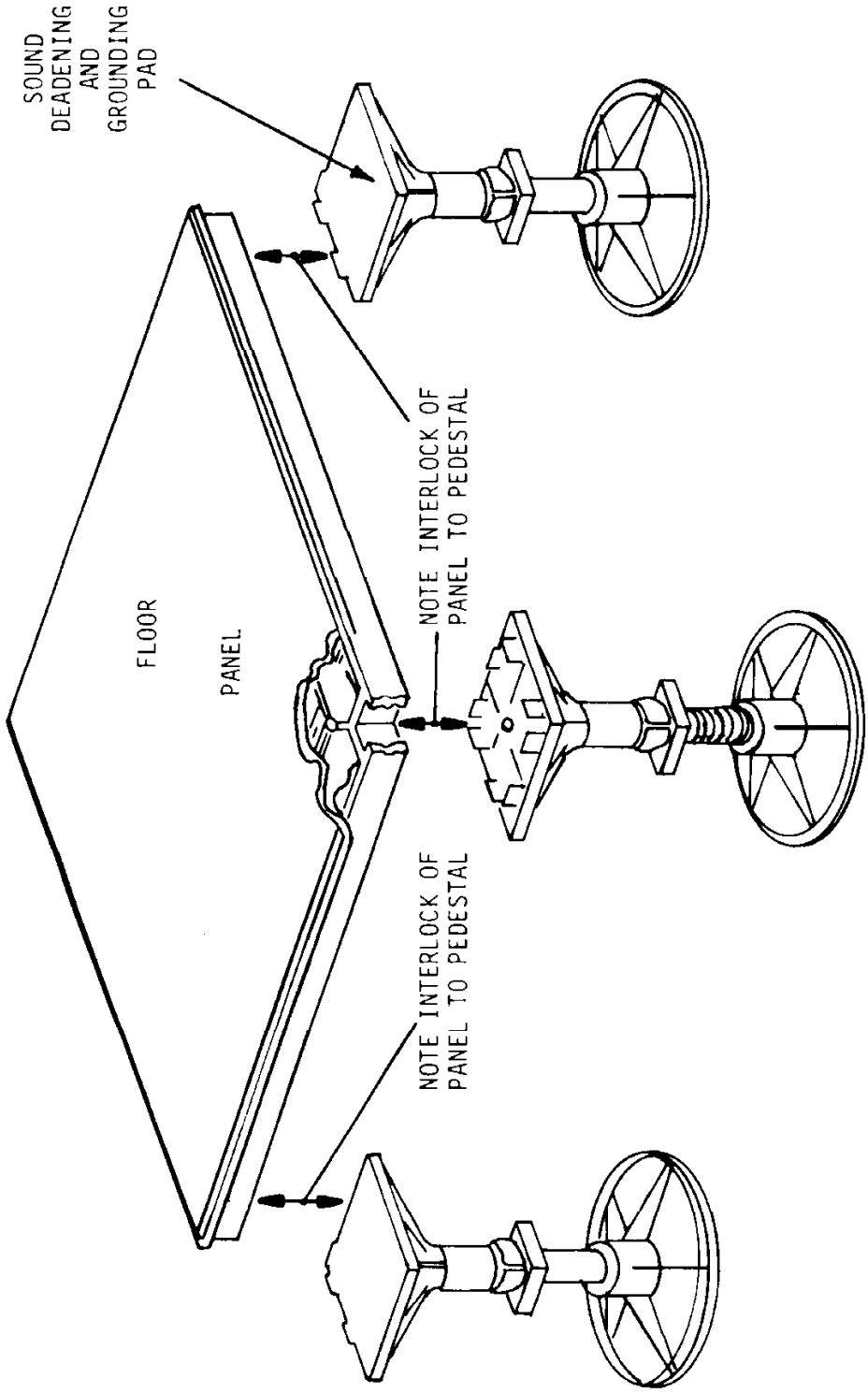

Figure 1-63. Example of Pedestal-Only Floor Construction

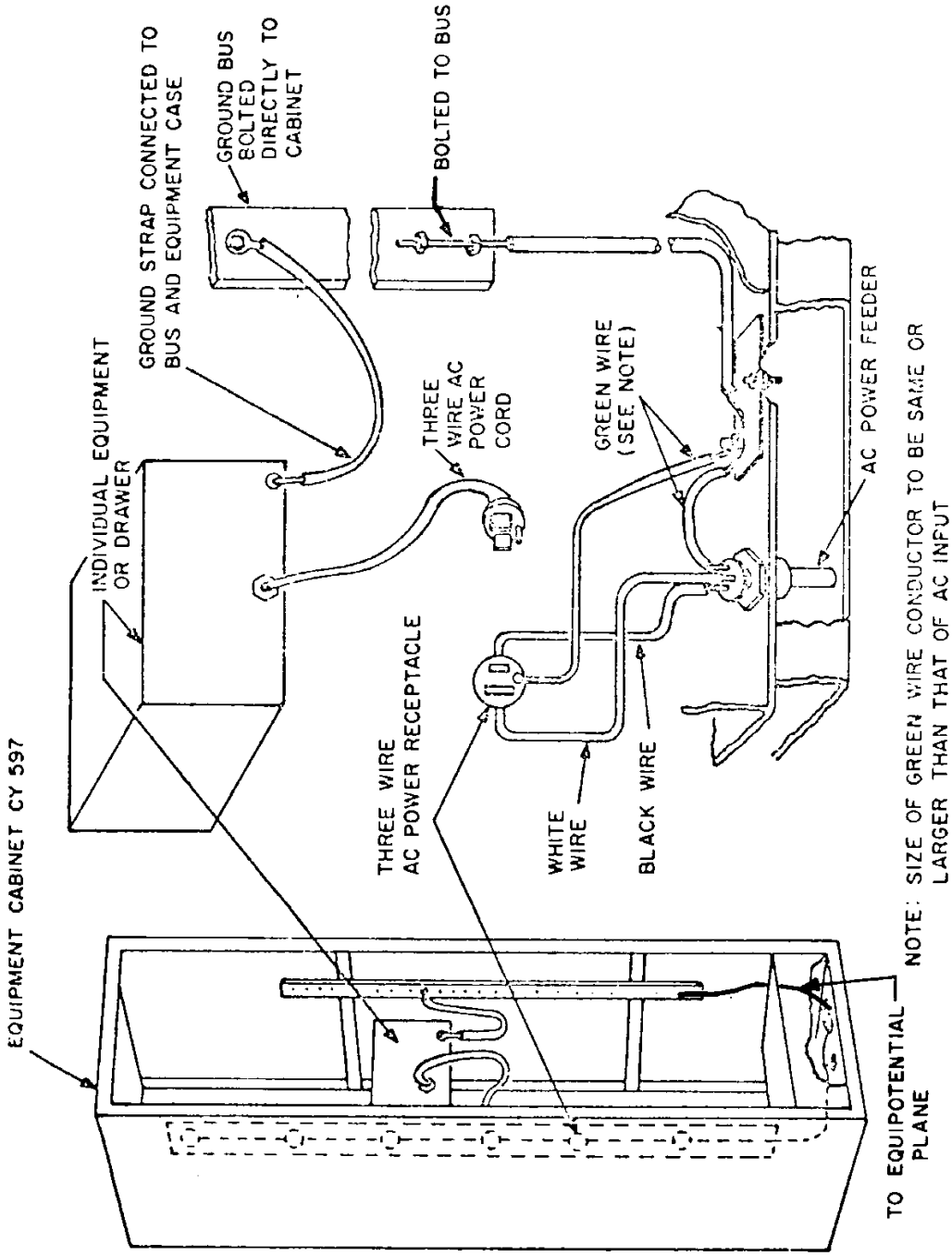

Figure 1-64. Typical Equipment Cabinet Grounding Detail

1.6 GROUNDING PHILOSOPHY FOR EQUIPMENTS PROCESSING NATIONAL SECURITY RELATED INFORMATION (RED/BLACK EQUIPMENTS). Grounding of equipment, conduit, and frames for safety protection in areas processing National Security related information (RED data) is no different than any other facility. Typically a RED and a BLACK signal ground is established by a direct connection totally within a controlled space to an equipotential ground plane and earth electrode subsystem (see Figure 1-65). Cable shields from the RED equipment to the RED side of the crypto are grounded at least at both ends. Cable shields from the BLACK side of the crypto equipment through the BLACK IDF to the BLACK equipment are normally grounded at both ends. For unbalanced signaling, signal ground is usually established by a direct connection from an isolated signal ground bus in the RED distribution frame to an equipotential ground plane and in turn to the earth electrode subsystem (see Figures 1-66, 1-67, and 1-68.) Figure 1-69 provides information on the facility power and ac ground distribution system. BLACK signal ground is used to provide a signal ground reference in the BLACK distribution frame and for signal line filters. For all aspects other than grounding, bonding, and shielding of secure installations, refer to NACSIM 5203. Refer to Section 2.4 of this Volume for the grounding of existing RED/BLACK equipments and systems.

Note: An equipotential ground plane is considered as earth for the signal reference subsystem of communication systems, regardless of elevation from physical earth.

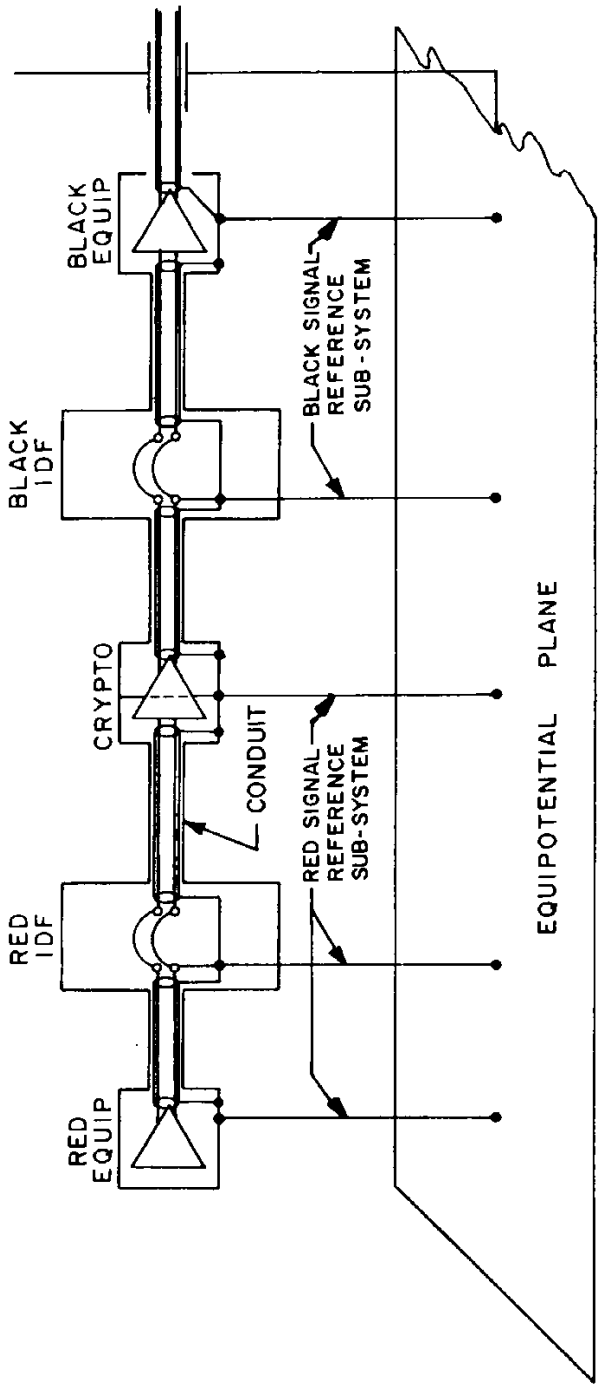

Figure 1-65. Typical RED/BLACK Signal Reference Subsystem (High Level Signals)

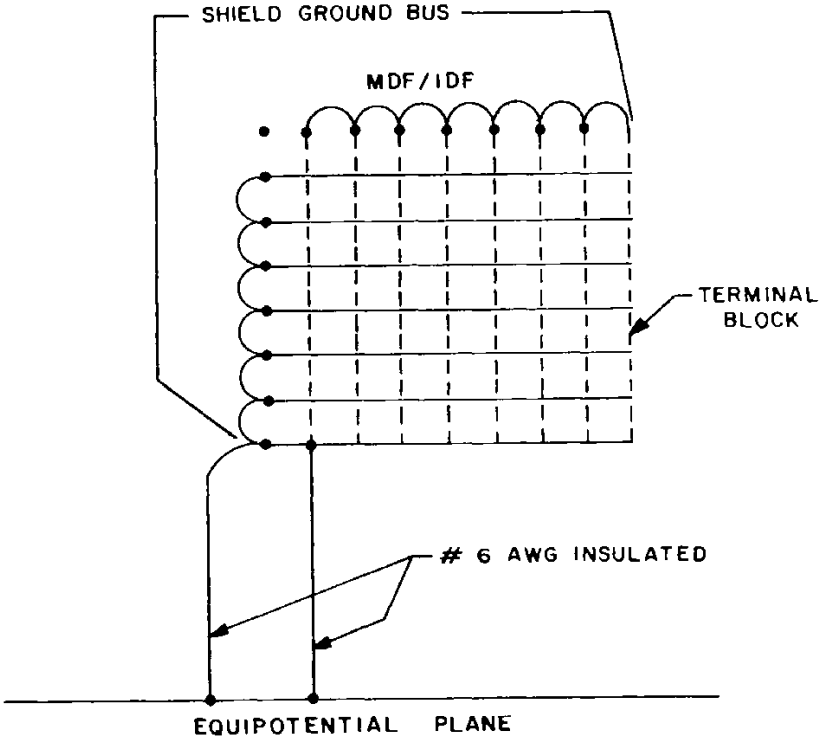

Figure 1-66. Typical Red Signal, Shield Ground, Bus Distribution System

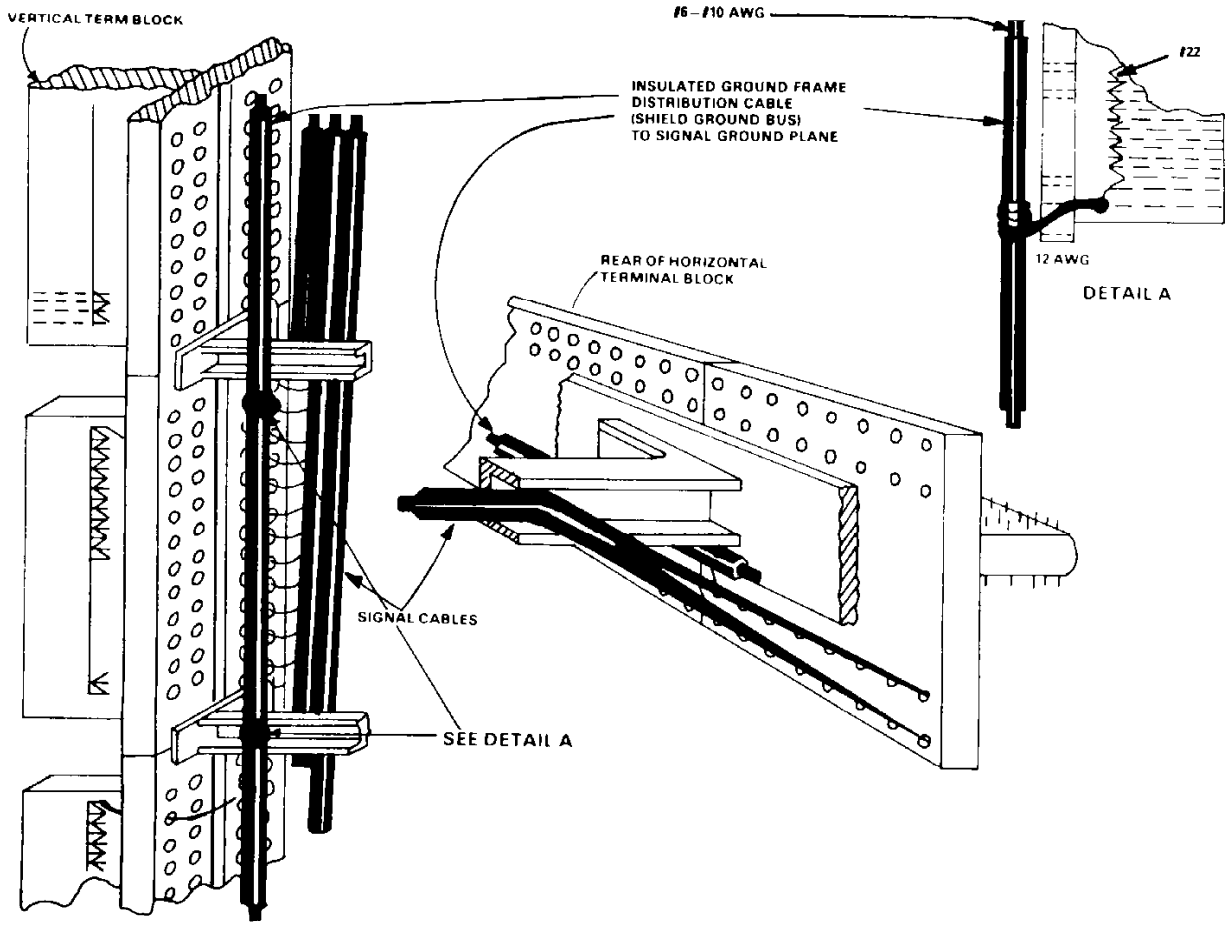

Figure 1-67. Typical Intermediate Distribution Frame (Shield Ground Bus in Distribution Frames)

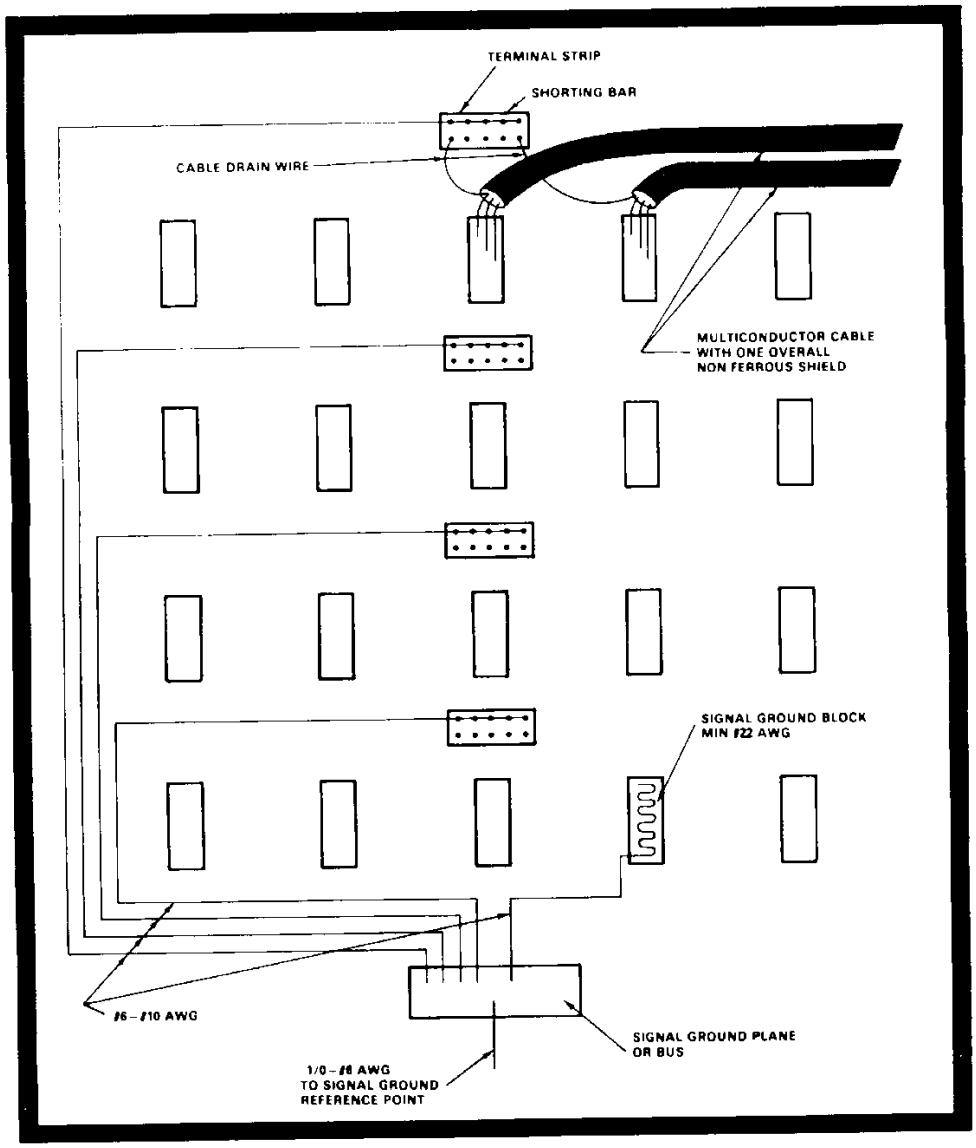

Figure 1-68. Typical Intermediate Distribution Frame (Data Concentrator Frame Installation)

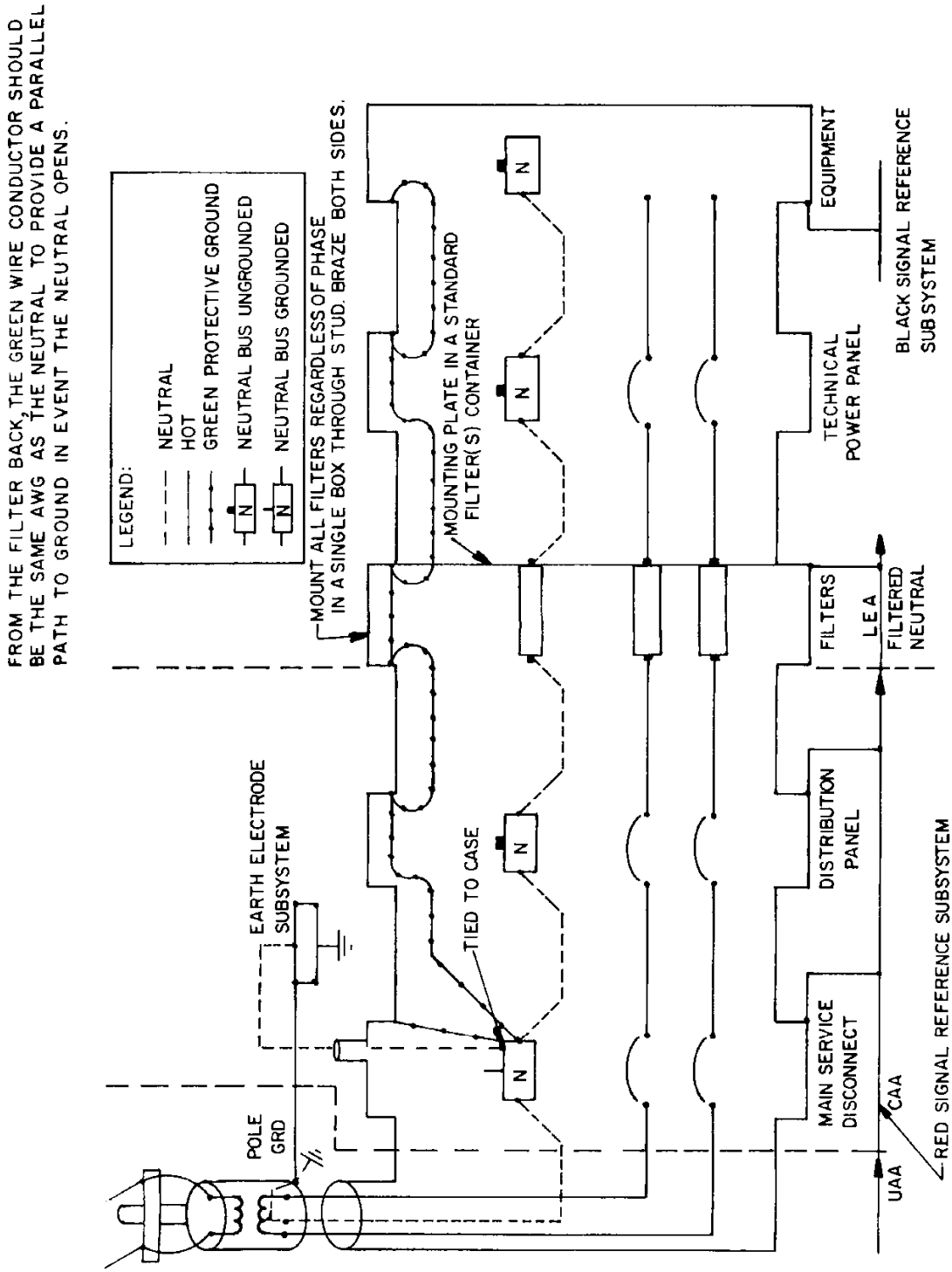

NOTE: WHEN USE OF NEUTRAL FILTER INTRODUCES SYSTEM/EQUIPMENT OPERATIONAL PROGRAMS, THE NEED FOR THE FILTER SHOULD BE VERIFIED BY A TEMPEST TEST.

Figure 1-69. Facility Power and AC Ground Distribution

1.7 BONDING PRACTICES. High quality bonds between conducting elements throughout the facility are essential ingredients to the effective functioning of all grounding and shielding networks. It is thus of paramount importance that thorough consideration be given to bonds and bonding throughout design and construction of a facility. A bonding resistance of 1 milliohm indicates a high quality junction has been achieved. See Volume I, Chapter 7, for additional information.

1.7.1 Application Guidelines.

a. Utilize welding (exothermic) whenever possible for permanently joined bonds. The welds must be adequate to support the mechanical load demands on the bonded members, and the following minimum requirements must also be met:

(1) On members whose maximum dimension is 5 cm (2 inches) or less, the weld must extend completely acres the side or surface of largest dimensions.

(2) On members whose largest dimension is greater than 5 cm (2 inches) but less than 30 cm (12 inches), one weld of at least 5 cm (2 inches) in length must be provided.

(3) On members whose largest dimension is greater than 30 cm (12 inches), two or more welds, each not less than 5 cm (2 inches) in length, are to be provided at uniform spacings across the surface of largest dimension. The maximum spacing between successive welds must not exceed 30 cm (12 inches).

(4) At butt joints, use complete penetration welds on all members whose thickness is 0.63 cm (1/4 inch) or less. Where the thickness of the members is greater than 0.63 cm (1/4 inch), the depth of the weld must not be less than 0.63 cm (1/4 inch).

(5) Fillet welds are to have an effective size equal to the thickness of the members or as specified by Construction Specification for the Design, Fabrication, and Erection of Structural Steel for Buildings (1-7).

(6) At lap joints between members whose thickness is less than 0.63 cm (1/4-inch), double fillet welds must be provided.

b. Use brazing (or silver soldering) for permanently bonding copper and brass.

c. Do not use soldered connections in the fault protection subsystem, the lightning protection subsystem or the earth electrode subsystem.

d. All structural bolted connections must conform to the torque requirements of Table 1-23.

e. The proper order of assembly for bolted bonds is illustrated in Figure 1-70. Position load distribution washers directly underneath the bolt head or under the nut next to the primary member. Lockwashers may be placed between the nut and any load distribution washers. Toothed lockwashers should not be placed between the primary bonded members but may be used as shown in Figure 1-70 for interior locations that are not exposed to moisture and where electrochemically compatible metals for the washer and bond members are utilized.

Table 1-23

Minimum Torque Requirements for Bolted Bonds

Bolt Size	Threads/Inch	Min. Torque (in -lbs)	Tension (lbs)	Bond Area ($in.^2$)
#8	32	18	625	0.416
	36	20	685	0.456
#10	24	23	705	0.470
	32	32	940	0.626
1/4”	20	80	1840	1.225
	28	100	2200	1.470
5/16”	18	140	2540	1.690
	20	150	2620	1.750
3/8”	16	250	3740	2.430
	24	275	3950	2.640
7/16”	14	400	5110	3.400
	20	425	5120	3.420
1/2”	13	550	6110	4.070
	20	575	6140	4.090
5/8”	11	920	7350	4.900
3/4”	10	1400	9300	6.200
7/8”	9	1950	11100	7.400
1"	8	2580	12900	8.600

f. Once the mating surfaces have been cleaned of all nonconductive material, join the bond members together as soon as possible. If delays beyond two hours are necessary in corrosive environments, the cleaned surfaces must be protected with an appropriate coating which, of course, must be removed before completing the bond.

g. Alligator clips and other spring loaded clamps are to be employed only as temporary bonds. Use them primarily to insure that personnel are not inadvertently exposed to hazardous voltages when performing repair work on equipment or on facility wiring.

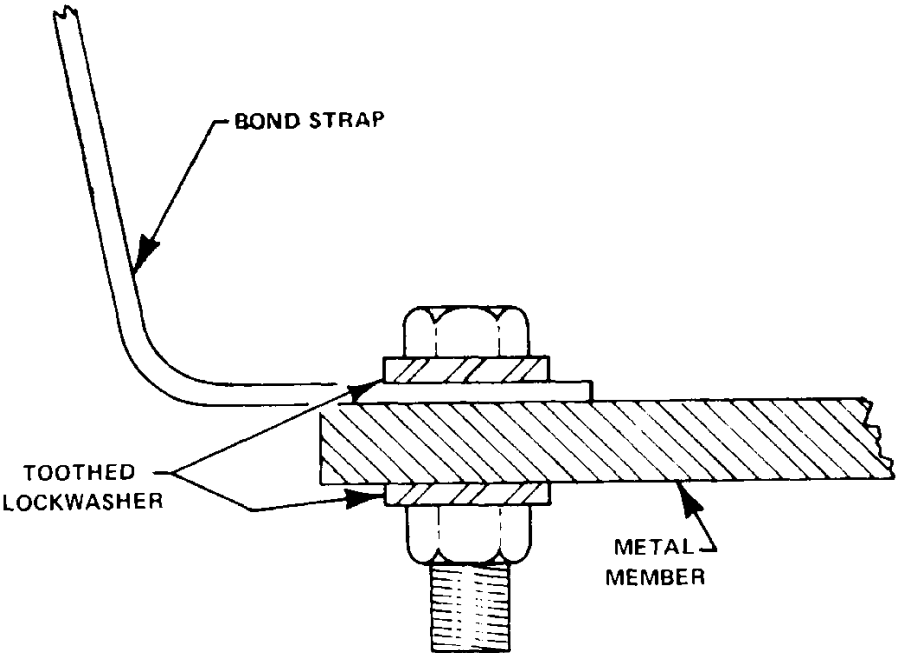

Figure 1-70. Order of Assembly for Bolted Connection

1.7.2 Surface Preparation.

a. Welding generally requires only the removal of foreign material which might prevent a homogeneous weld from being established.

b. Before performing exothermic welding, dirt and other debris must be wiped or brushed away from the weld area and water must be dried off before positioning the molds.

c. Surfaces to be brazed or soldered are to be cleaned of all foreign matter and metallic films that would prevent adhesion of the filler metal to the primary members, and appropriate fluxes are to be applied. After the bond has been completed, remove any excess flux or neutralizers to prevent future corrosion.

d. The mating surfaces of bolted and other compression type bonds require careful cleaning in accordance with the discussion in Volume I, Section 7.6. The basic requirements are:

(1) All nonconductive material must be removed. Such materials include paints and other organic finishes; anodize films; oxide and sulfide films; and oil, grease and other petroleum products.

(2) All corrosive agents must be removed. Such agents include water, acids, strong alkalies, and any other materials which provide conductive electrolytic paths.

(3) All solid matter which would interfere with the establishment of a low resistance path across the bond interface or which forms a wedge or barrier to keep the bond area open to the entrance of corrosive materials or agents must be removed. Such solid materials include dust, dirt, sand, metal filings, and corrosion by-products.

1.7.3 Bond Protection Code. For bonds of high reliability, corrosion must be prevented by (1) avoiding the pairing of dissimilar metals and (2) preventing the entrance of moisture or other electrolytes into the bond area.

Metals to be indirect contact should fall as close together in the galvanic series (see Volume I, Section 7.8.l.2) as possible. Compatible groupings of the common metals are given in Table 1-24. The corrosive action between metals of different groups will be greatest when the metallic union is openly exposed to salt spray, rain, or other liquids. The less exposed the bond, the less the rate of corrosion. The relative degrees of exposure may be defined as follows (1-8):

Exposed: Open, unprotected exposure to weather.

Sheltered: Limited protection from direct action of weather. Locations in louvered housings, sheds, and vehicles offer sheltered exposure.

Housed: Located in weatherproof buildings.

When bonds under these different exposure conditions must be made between different groups, they should be protected as indicated by Table 1-25. Condition A means that the couple must have a protective finish applied after metal-to-metal contact has been established so that no liquid film can bridge the two elements of the couple. Condition B means that the two metals may be joined with bare metal exposed at junction surfaces. The remainder of the bond must be given an appropriate protective finish. Condition C indicates that the combination cannot be used except under very unusual circumstances where short life expectancy can be tolerated or when the equipment is normally stored and exposed for only short intervals. Protective coatings for bonds subjected to weather exposure, corrosive fumes, or excessive dust are mandatory. Consult Table 1-26 for assistance in choosing a method for protecting the bond members against corrosion.

Table 1-24

Compatible Groups of Common Metals

Group	Metals
I	Magnesium
II	Aluminum, aluminum alloys, zinc, cadmium
III	Carbon steel, iron, lead, tin, lead-tin solder
IV	Nickel, chromium, stainless steel
V	Copper, silver, gold, platinum, titanium

Table 1-25

Bond Protection Requirements

Condition of Exposure	Anode I	Anode II	Anode III	Anode Iv	Cathode
Exposed	A	A			
Sheltered	A	A			II
Housed	A	A			
Exposed	C	A	B		
Sheltered	A	B	B		III
Housed	A	B	B		
Exposed	C	A	B	B	
Sheltered	A	A	B	B	IV
Housed	A	B	B	B	
Exposed	C	C	C	A	
Sheltered	A	A	A	B	V
Housed	A	A	B	B	

Table 1-26

Protective Finishes for Bond Members

Type Bond	Finishing Requirements
1. Between Similar Metals	
a. Clad and corrosion resistant aluminum (6061)	Clean and deoxidize
b. Non-corrosion resistant aluminum	Chemically treat per MIL-C-5541 (l-9) using colored inspectable coating on both members of joint (Alodine 600, Iridite 14).
c. Steel (alloy and carbon)	If entire part is finished, plate with tin, MIL-T-10727 (1-10), Type I or II. If only faying surface is finished, plate with tin using brush plating method.
d. Corrosion-resistance steel (18-8 stainless steel)	Clean per TT-C-490 (1-11) Method I (abrasive) or Method VI (phosphoric acid etch) for machined surfaces.
e. Copper and copper alloys	If entire part is finished, plate with tin, MIL-T-10727, Type I or II. If only faying surface is finished, plate with tin using brush plating method.
2. Dissimilar Metals	
a. Corrosion resistant aluminum mated with the following metals:	Clean and deoxidize
(1) Non-corrosion resistant aluminums	Chemically treat per MIL-C-5541, colored inspectable coating (Alodine 600, Iridite 14).
(2) Steel (alloy and carbon)	If entire part is finished, plate with tin, MIL-T-10727, Type I or 11. If only faying surface is finished, plate with tin using brush plating method.
(3) Copper and copper alloys	If entire part is finished, plate with tin, MIL-T-10727, Type I or II. If only faying surface is finished, plate with tin using brush plating method.

Table l-26 (Continued)

Protective Finishes for Bond Members

Type Bond	Finishing Requirements
(4) Corrosion-resistant	Clean per TT-C-490, Method I (abrasive) or Method VI (phosphoric acid etch).
b. Non-corrosion resistant aluminum mated with the following metals:	Chemically treat per MIL-C-5541, colored inspectable coating (Alodine 600, Iridite 14).
(1) Steel (alloy and carbon)	If entire part is finished, plate with tin, MIL-T-10727, Type I or II. If only faying surface is finished, plate with tin using brush plating method.
(2) Copper and copper alloy	[f entire part is finished, plate with tin, MIL-T-10727, Type I or II. If only faying surface is finished, plate with tin using brush plating method.
(3) Corrosion resistant steel	Clean per TT-C-490, Method I (abrasive) or Method VI (Phosphoric acid etch).
c. Steel (alloy and carbon) mated with the following metals:	If entire part is finished, plate with tin, MIL-T-10727, Type I or II. If only faying surface is finished, plate with tin using brush plating method.
(1) Copper and copper alloys	If entire part is finished, plate with tin, MIL-T-10727, Type I or II. If only faying surface is finished, plate with tin using brush plating method.
(2) Corrosion resistant steel	Clean per TT-C-490, Method I (abrasive) or Method VI (phosphoric acid etch).
d. Copper and copper alloys	If entire part is finished, plate with tin, MIL-T-10727, Type I or II. If only faying surface is finished, plate with tin using brush plating method.
(1) Corrosion resistant steel	Clean per TT-C-490, Method I (abrasive) or Method VI (phosphoric acid etch).

1.7.3.1 Jumper Fasteners. Acceptable fastener materials for bonding aluminum and copper jumpers to structures are indicated in Table 1-27. The arrangement of the metals is in the order of decreasing galvanic activity. The screws, nuts, and washers to be used in making the connections as indicated are:

Type I - Cadmium or zinc plated steel, or aluminum
Type II - Passivated stainless steel

Where either type of securing hardware is indicated, Type II is preferred from a corrosion standpoint.

Table 1-27

Metal Connections for Aluminum and Copper Jumpers

Metal Structure (Outer Finish Metal)	Connection For Aluminum Jumper	Screw Type	Connection For Tinned Copper Jumper	Screw Type
Magnesium and Magnesium alloys	Direct or Magnesium washer	Type I	Aluminum or Magnesium washer	Type I
Zinc, Cadmium, Aluminum and Aluminum alloys	Direct	Type I	Aluminum washer	Type I
Steel (except stainless steel)	Direct	Type I	Direct	Type I
Tin, Lead, and Tin-lead solders	Direct	Type I	Direct	Type I or II
Copper and Copper alloys	Tinned or Cadmium plated washer	Type I or II	Direct	Type I or II
Nickel and Nickel alloys	Tinned or Cadmium plated washer	Type I or II	Direct	Type I or II
Stainless Steel	Tinned or Cadmium plated washer	Type I or II	Direct	Type I or II
Silver, Gold and precious metals	Tinned or Cadmium plated washer	Type I or II	Direct	Type 1 or II

1.7.4 Typical Bonds.

1.7.4.1 Cable Trays. Utilize cable trays as part of the overall system bonding scheme. Bond each section of each tray in the manner shown in Figure 1-71 to the following section to provide a continuous path. The trays should also be connected to equipment housings by wide, flexible, solid bond straps as illustrated in Figure 1-72.

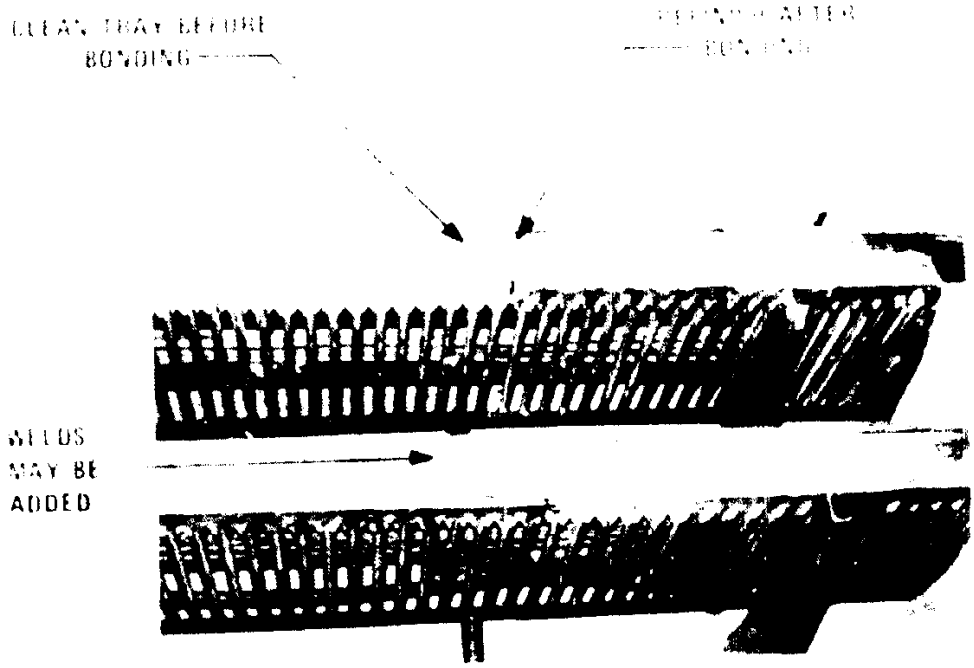

Figure 1-71. Bonding of Cable Trays

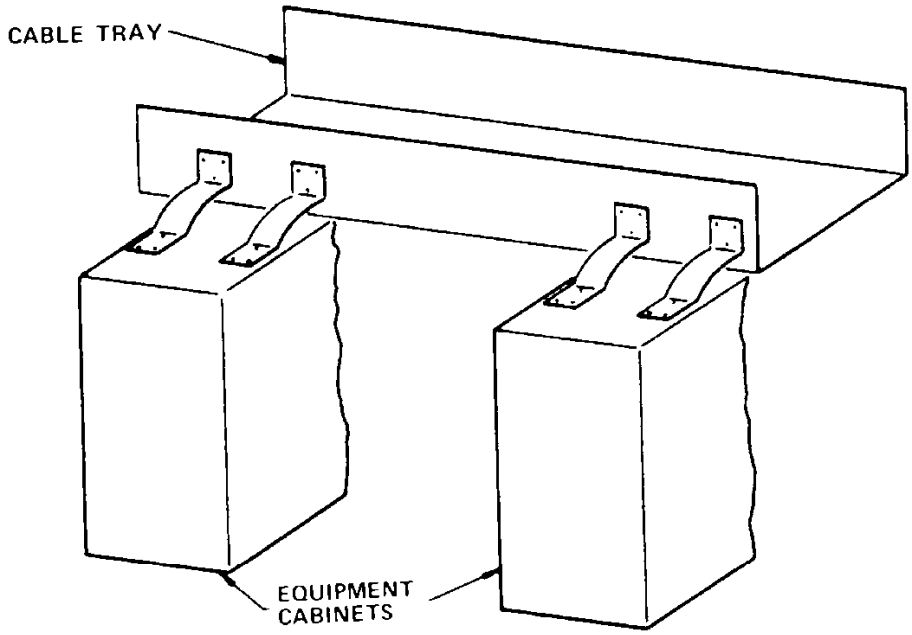

Figure 1-72. Bonding of Equipment Cabinets to Cable Tray

1.7.4.2 Tubing and Conduit. Long spans of conduit should be properly bonded to the structure at both ends and at several intermediate points. Ordinary clamps cannot be used to bond flexible conduit since the required pressure on a comparatively small surface area may be sufficiently high to compress or collapse the conduit. Instead of ordinary clamps, use a flared, split sleeve (Figure 1-73) fitted around the flexible conduit. This sleeve distributes the high pressure of the bonding clamp over a large area, thereby exerting low pressure on the conduit. Figure 1-74 illustrates a method for bonding to rigid conduit. With either type of clamp, the conduit or tubing should be cleansed of paint and foreign material over the entire surface covered by the clamps. All insulating finishes should be removed from the contact area before assembly, and anodized screws, nuts, and washers should not be used to attach contacting parts.

1.7.4.3 Other Examples. Figures 1-75 through 1-80 illustrate recommended bonding methods appropriate for most facilities.

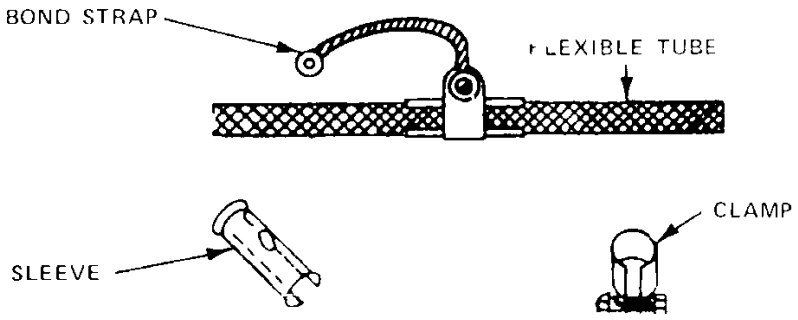

Figure 1-73. Bonding to Flexible Cable and Conduit

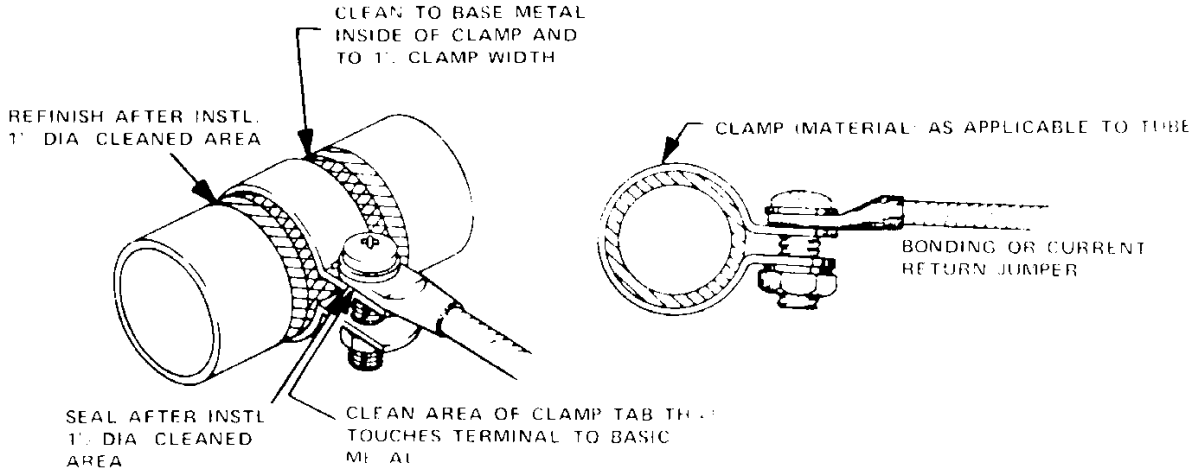

Figure 1-74. Bonding to Rigid Conduit

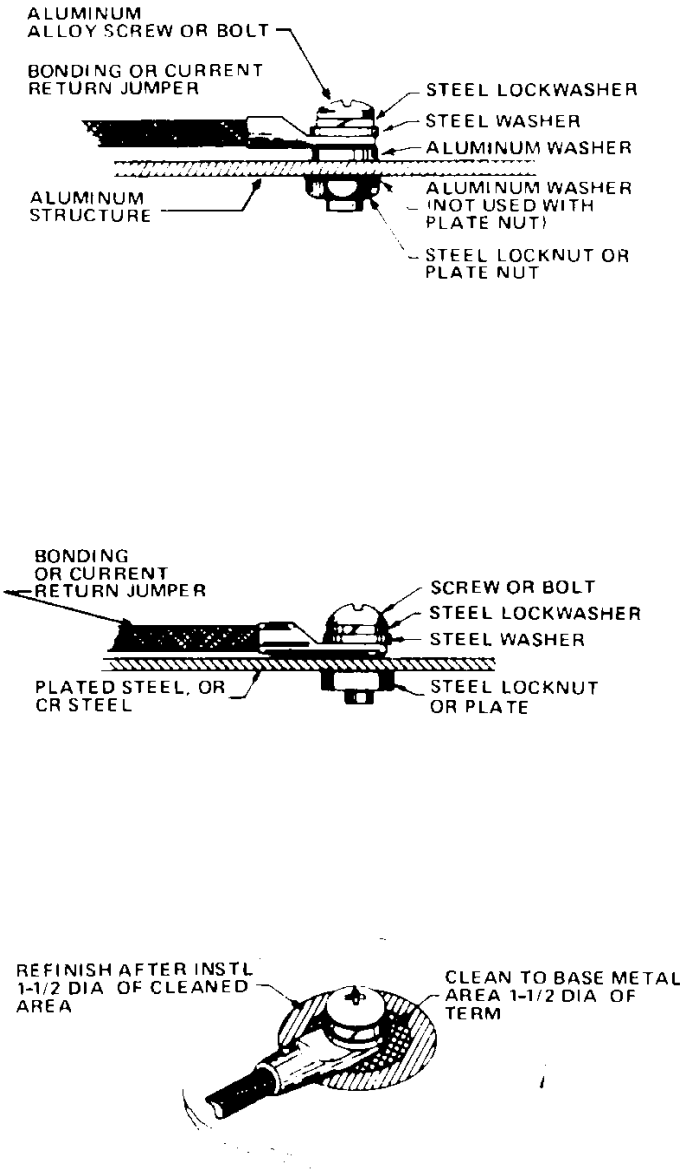

Figure 1-75. Connection of Bonding Jumpers to Flat Surface

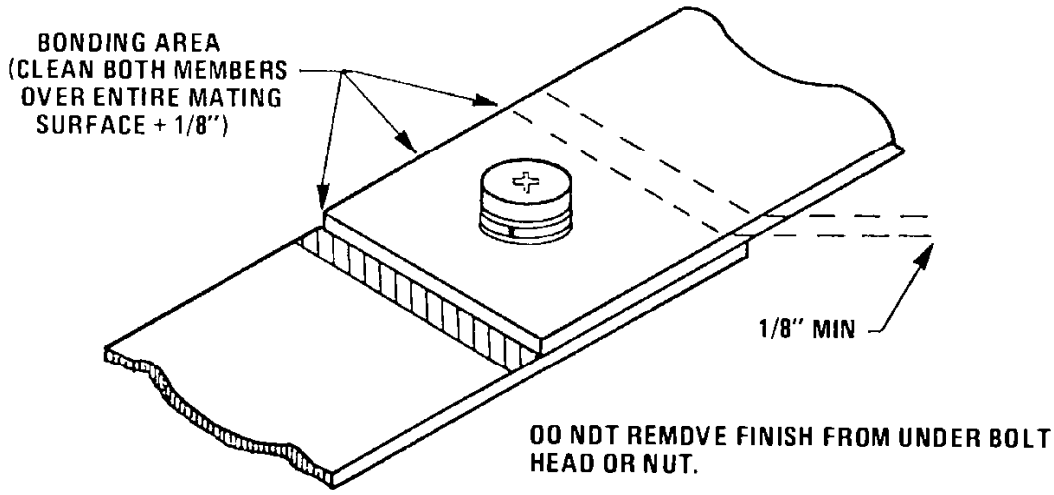

Figure 1-76. Bolted Bond Between Flat Bars

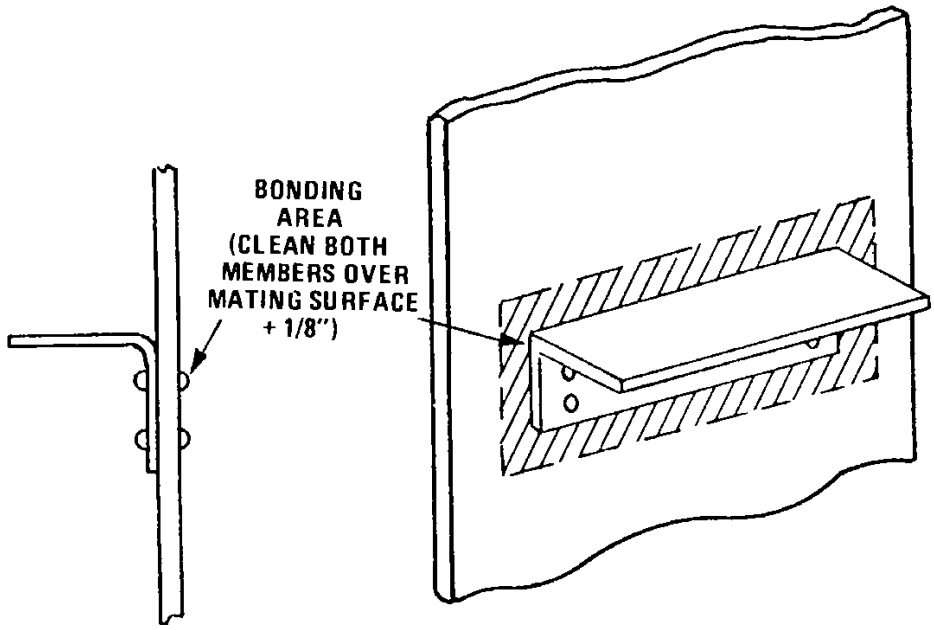

Figure 1-77. Bracket Installation (Rivet or Weld)

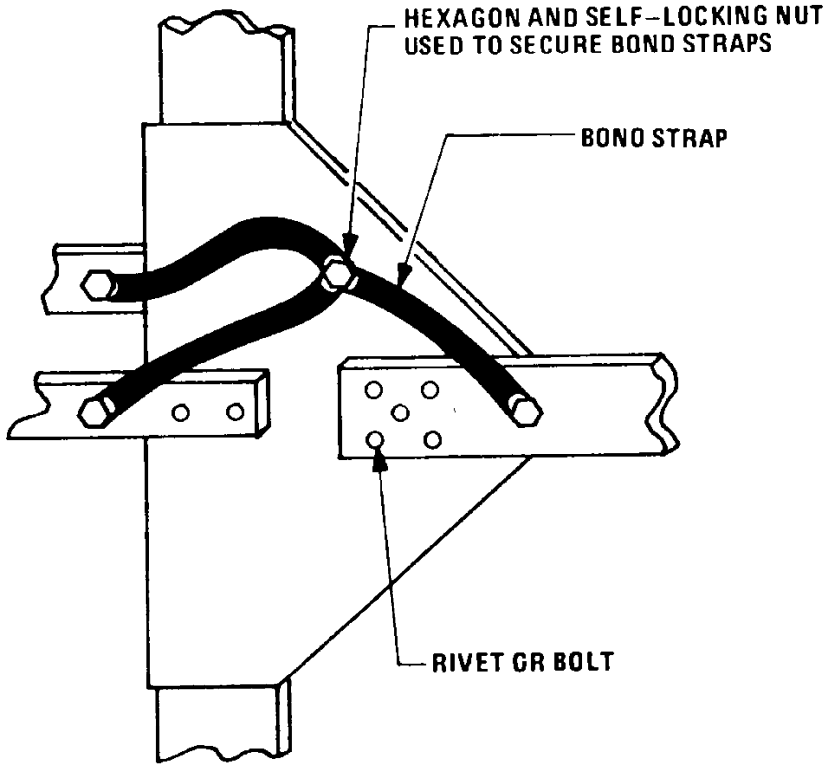

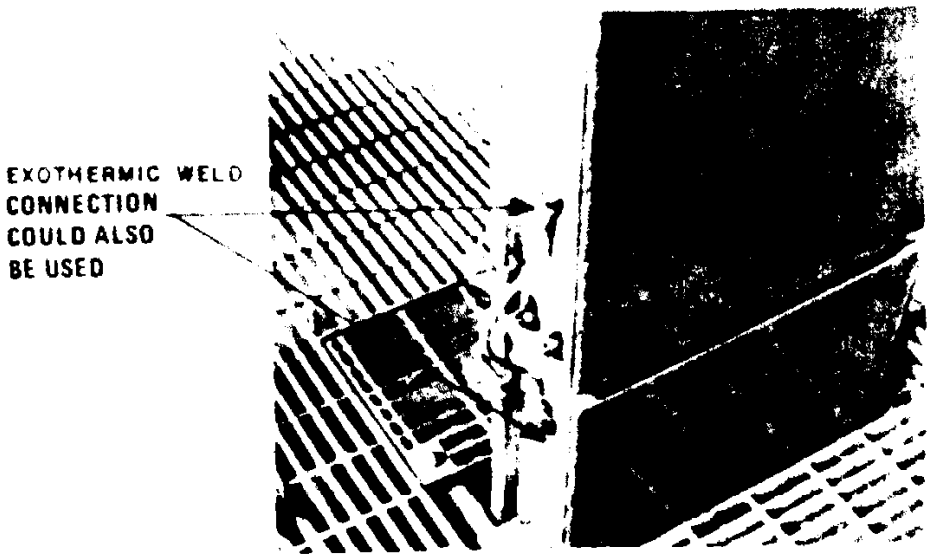

Figure 1-78. Use of Bonding Straps for Structural Steel Interconnections

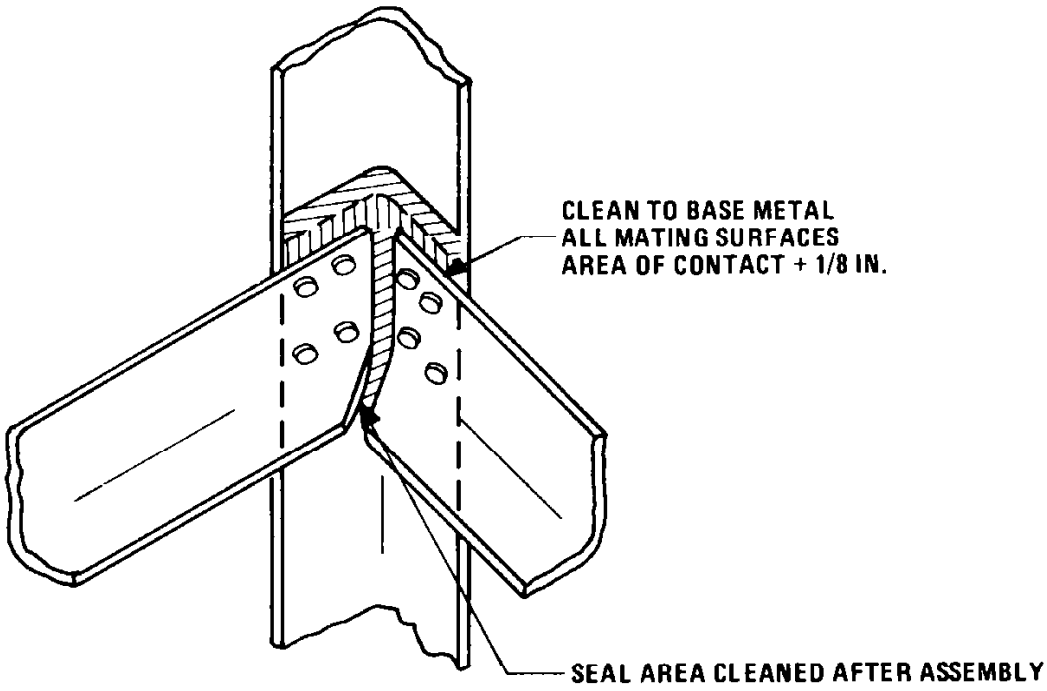

Figure 1-79. Direct Bonding of Structural Elements

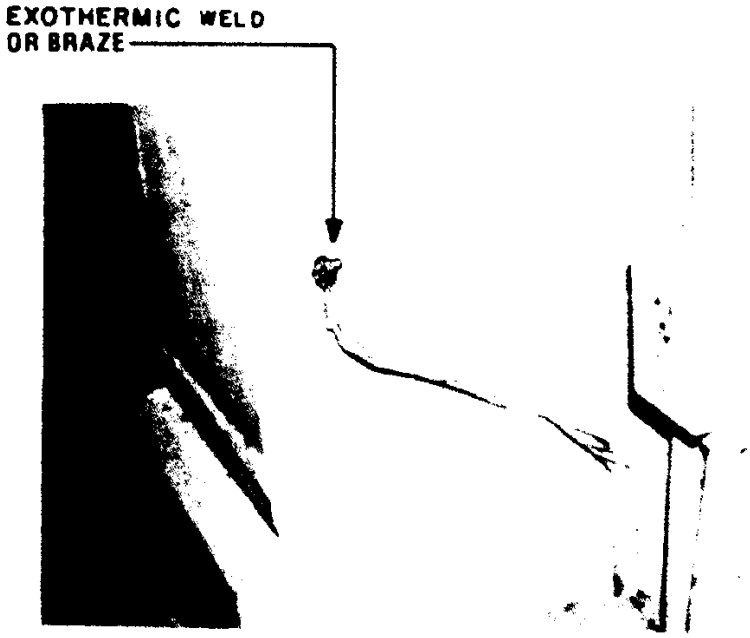

Figure 1-80. Connection of Earth Electrode Riser to Structural Column

1.8 SHIELDING. The shielding provided in a given facility should be adequate to provide the needed equipment and personnel protection; however, it need not go beyond what is required for that particular facility. To determine the shielding required at a facility, the electromagnetic environment at the planned location should first be surveyed; then this threat environment should be compared with the response properties or susceptibilities of the equipment to be located in that environment. If a need for shielding is indicated, then it should be provided either as a part of the facility or the equipment shielding should be upgraded. The final decision will be based on a trade off between the known (or estimated) shielding requirements and the relative cost to provide this shielding. Conducted as well as radiated susceptibility and emission requirements of C-E equipments should meet the specifications of MIL-STD-461.

1.8.1 Establishing Requirements.

a. Tailor the shielding of the facility according to the needs of the equipments or systems to be located there by

(1) Conducting an electromagnetic survey at the facility location (see Volume I, Section 8.12.2) (The performance of these surveys requires specialized instrumentation, careful equipment calibration procedures, and calibrated antennas. Have this survey performed by an experienced team.),

(2) examining the history of performance of the similar equipments at other sites with comparable electromagnetic environments, and

(3) considering the measured EMI characteristics of the equipments (if available).

b. If measured susceptibility data (the incident field levels which cause equipment interference) are available, determine the amount of additional shielding necessary by subtracting the equipment susceptibility level (in dB above a microvolt per meter, dB μ V/m) from the field strength (as measured in dB μ V/m) of the incident signals. If the measured signal strength is greater than the susceptible level, arrange to provide the extra shielding necessary either as part of the structure or building or require that the equipment's shielding be upgraded (see Section 3.4). If susceptibility data is not available, make a best estimate of the amount of required shielding from the historical performance of the equipments (or similar types) at other sites.

c. Before deciding what type or how much supplemental shielding material is necessary, estimate the amount of shielding inherently provided by conventional building materials and techniques. For example:

(1) Use Figures 1-81 and 1-82 to estimate the shielding provided by normal construction techniques (steel skeleton with brick or concrete block exterior with standard wood, gypsum board, or concrete block interior walls).

(2) Reinforced concrete offers additional shielding because of the presence of the rebar. Estimate the shielding effectiveness of single course rebar to low frequency magnetic fields from the curves shown in Figure 1-83. (Use Table 1-28 to obtain attenuation correction factors to apply to Figure 1-83 for other size rebar and other spacings.)

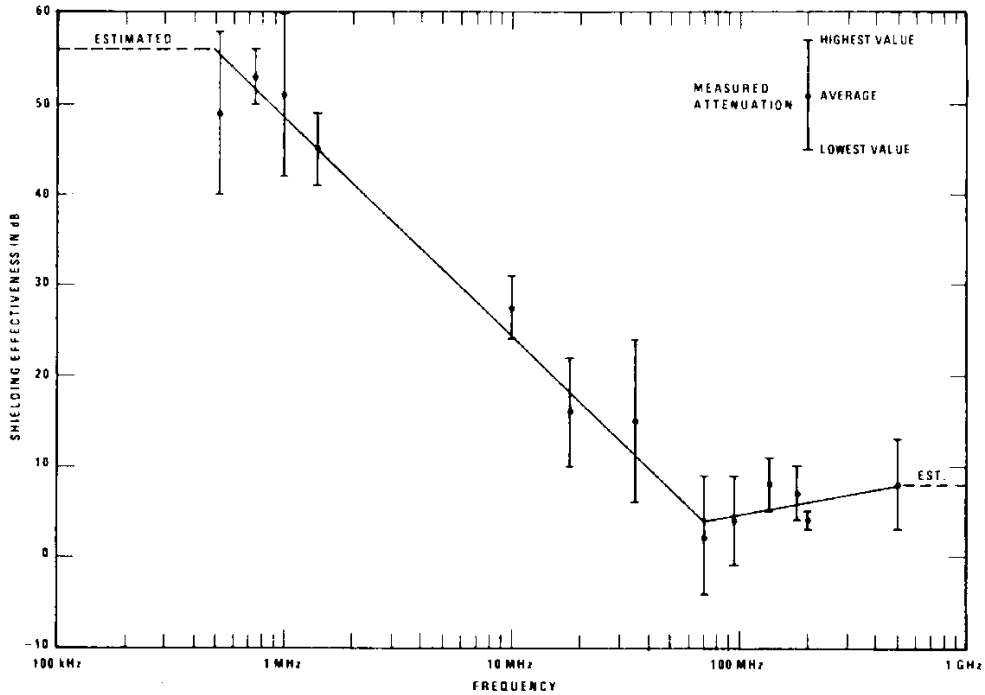

Figure 1-81. Measured Electromagnetic Shielding Effectiveness of a Typical Building at 6 Feet Inside Outer Wall (1-12)

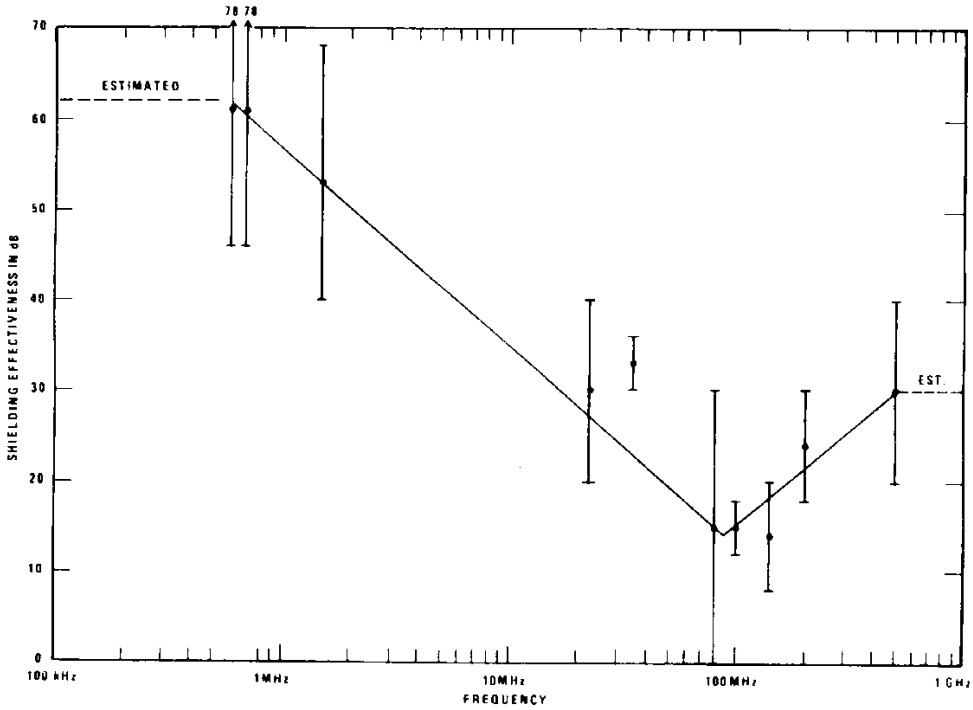

Figure 1-82. Measured Electromagnetic Shielding Effectiveness of a Typical Building at 45 Feet Inside Outer Wall (1-12)

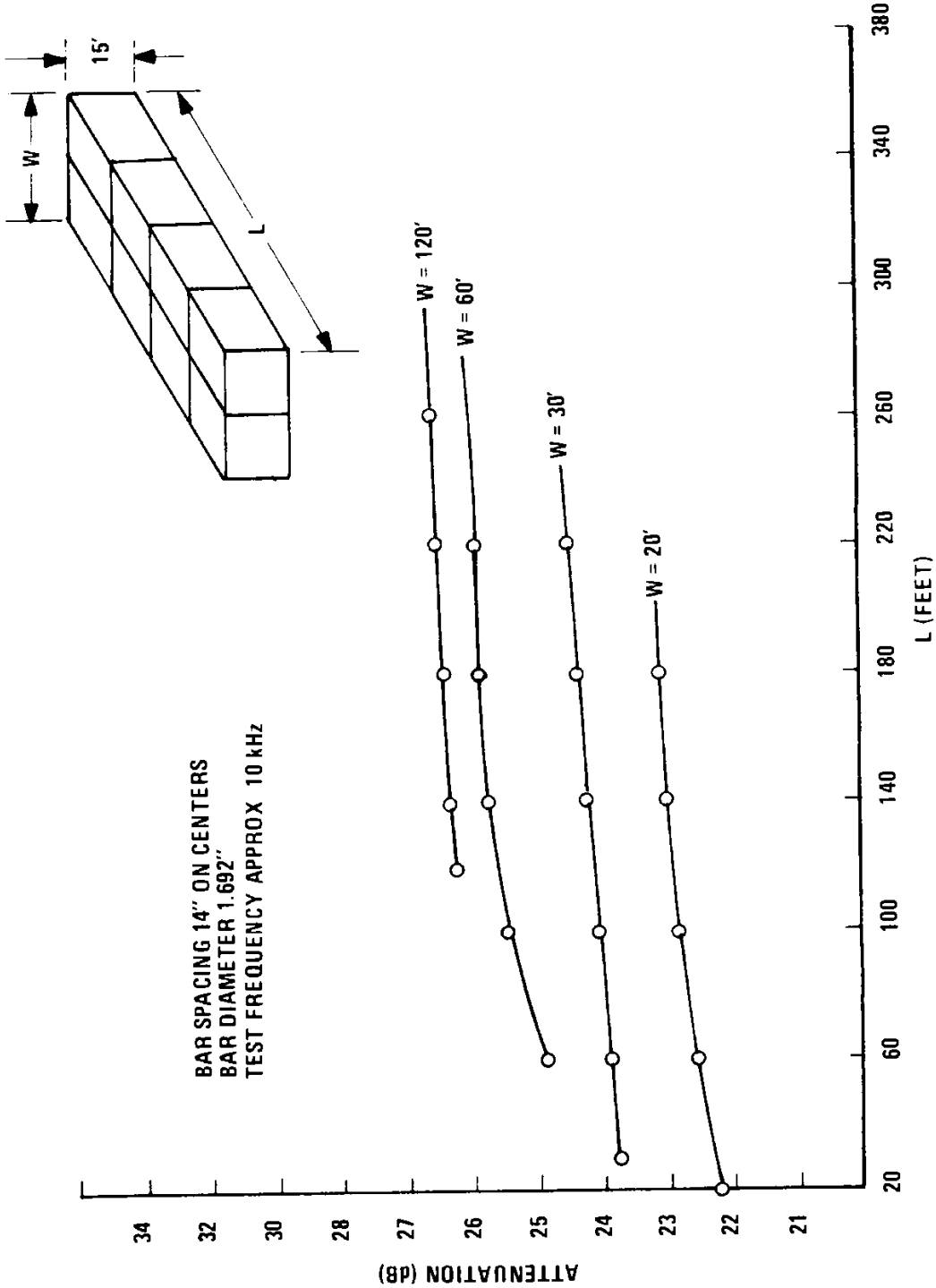

Figure 1-83. Shielding Effectiveness of Rebars (1-13)

Table 1-28

Attenuation Correction Factors for Reinforcing Steel (1-14)

Bar Diameter (in.)	Bar Spacing (in.)	No. of Courses	Correction Factor (dB)
2.257	12	Single	+5
1.692	14	Single	0
1.000	18	Single	-6
2.257	20	Double	+8.5
1.692	14	Double	+13
1.000	16	Double	+5

(3) Use Figure 1-84 to determine the relative attenuation of rebar (and other wire mesh or grid) to higher frequency electric fields and plane waves. To use this figure, first calculate the ratio of the wire (or bar) diameter, d, to the wire spacing, S. Then determine the ratio of S to the wavelength, λ, at the frequency, f, of interest (λ in meters = 3 x 10^8 divided by f in hertz). For example, determine the shielding effectiveness at 100 MHz of a 1" x 2" grid made of No. 10 AWG (0.1" diameter) wire.

Calculation Steps

(a) $\lambda = \frac{3 \times 10^8}{1 \times 10^8} = 3 \text{ m} = 118 \text{ in.}$

(b) for $S = 1$, $\frac{S}{\lambda} = \frac{1}{118} = 0.0085$ and

for $S = 2$, $\frac{S}{\lambda} = \frac{2}{118} = 0.017$

depending upon the polarization of the incident wave.

(c) for $S = 1$, $\frac{d}{S} = \frac{0.1}{1} = 0.1$ and

for $S = 2$, $\frac{d}{S} = \frac{0.1}{2} = 0.05$

(d) The Shielding Effectiveness (SE) (depending upon the polarization of the field) from Figure 1-84 is either

$$SE_{S=1} = 35 \text{ dB}$$

or

$$SE_{S=2} = 25 \text{ dB.}$$

(e) Use the lowest SE (25 dB) for design purposes.

d. If these calculations or estimates indicate a need for additional shielding, incorporate the shielding into the design of the structure, and schedule its installation at a time in the construction phase when it can be done most economically.

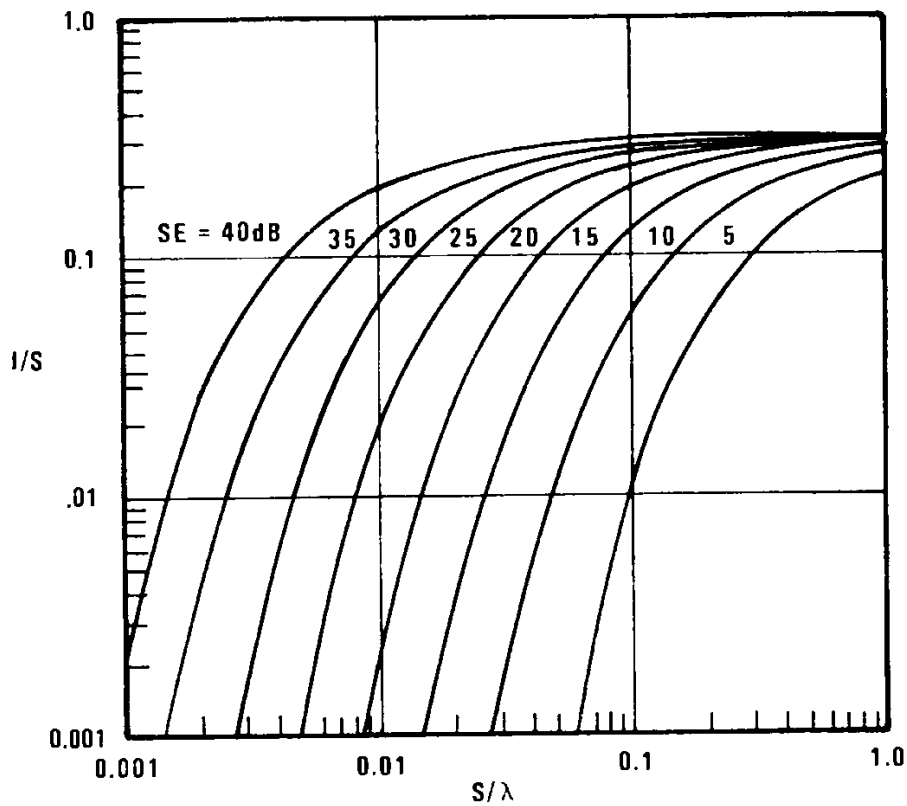

Figure 1-84. Shielding Effectiveness of a Grid as a Function of Wire Diameter, Wire Spacing, and Wavelength (1-15)

1.8.2 Design Guidelines.

a. Design the shielding to conform to the needs of the system. Consider the relative ease of shielding an individual equipment rather than shielding a room or the entire structure.

b. Assure that the shielding provided is sufficient to meet system needs (both known and predicted) but do not excessively over design.

c. Use the inherent shielding properties of the structure to maximum advantage. Employ the small amount of shielding (typically 10-20 dB) offered by reinforced concrete. However, do not expect common building materials such as brick, concrete, wood, fiberglass, or plastic to provide any significant shielding to electromagnetic signals (1-16).

d. Locate most sensitive and most critical equipments as close to the core of the structure as operational requirements will permit.

e. To minimize the attenuation requirements on shields, predetermine the location of likely sources of interference such as power substations, engine-generators, and RF transmitters; maximize the separation between such sources and potentially susceptible equipments or systems.

f. Where a choice exists as to exterior skin materials for the shelter or structure (e.g., fiberglass versus sheet steel or aluminum) choose metals to take advantage of their improved shielding properties. (In order to utilize metal sidings as effective shields, seams must be electrically continuous.)

g. Insure that shield continuity is maintained at points of entry of signal cables, power conductors, utility lines, and ground conductors.

h. Make sure that windows, doors, and ventilation ports are shielded along with the walls. Use well bonded screen wire for windows, use metal doors, and apply honeycomb ducts or appropriate screening over ventilation ports.

i. Equip all power lines supplying shielded areas with power line filters.

j. Use steel conduit in preference to aluminum conduit to take advantage of the improved magnetic shielding properties of steel.

k. Use enclosed metal wiring ducts or raceways in preference to open mesh or unenclosed types.

l. If the only purpose of the shield is to establish a personnel barrier to prevent inadvertent contact with dc and power frequency hazardous voltages, consider the use of nonconductive shields which may be less expensive. (If metal shields are used to provide shock protection, they must be well grounded to the power safety ground - the green wire network.)

1.8.3 Selection of Materials. The selection of a shielding material can be done either by (1) choosing a possible metal of a given thickness and then determining if the shielding effectiveness is equal to or greater than the field attenuation desired, or (2) starting with desired attenuation, determining what thickness of metal sheet or what type of screen is required. Either approach is acceptable.

a. As the first step in the selection of a shield type and material, ascertain the nature of the field by determining whether it is an electric field, magnetic field, or a plane wave. (The distance between the source and the shield relative to signal wavelength gives an indication of the impedance characteristics of the incident field. Note the source may be either the actual signal generator such as a transmitter or it may be the current-carrying conductor such as a power line or signal cable.)

(1) First compute the wavelength, λ, or the incident signal or signals from

$$\lambda = \frac{3 \times 10^8}{f}$$

For f in hertz, λ will be in meters.

(2) If source location is known, measure or estimate r. Then calculate $\frac{2\pi r}{\lambda}$.

Value of r must be greater than $\frac{2D^2}{\lambda}$.

r is distance from source in meters
D is length of antenna in meters

(3) If $2\pi r/\lambda$ is less than unity, the incident field will either be a high impedance electric field or it will be a low impedance magnetic field. To determine which one, try to establish what type of source produced the field. (An electric field source is characterized by a high source impedance and relatively low currents. Examples are high voltage dc power supplies; static discharges; short monopole antennas; etc. A magnetic field source is generally characterized as a low impedance, high current source. Typical magnetic sources are loop antennas and power lines.)

(4) If $2\pi r/\lambda$ is unity or greater, assume the incident field is a plane wave.

b. Next, use Figure 1-85 to obtain the absorption loss of the material selected for a plane wave. To use this nomograph, draw a straight line between a point on the right hand vertical scale that corresponds to the particular metal involved and the correct point on the thickness scale (center scale on the nomography). Mark where the straight line crosses the unlabeled pivot line. Next place a straight edge between the marked point on the pivot line and the frequency of interest (1eft most vertical scale). Read the absorption loss off the compressed scale just to the left of the thickness scale. (The determination of the absorption loss of a 14 mil sheet of stainless steel at 1 kHz is illustrated on the figure. First, line 1 is drawn between stainless steel on the right hand scale and 14 mils on the thickness scale. Then line 2 is drawn between 1 kHz on the left hand scale and the crossover point. The indicated absorption loss is 3 dB.)

If the specific metal of interest is not indicated on the right hand scale, obtain both the relative conductivity, g_r, and the relative permeability, μ_r, from Table 1-29. Multiply g_r times μ_r; use the product as the right hand location for line 1 and complete the determination. (Given the frequency and the desired absorption loss, this nomograph can be used to determine the thickness and/or the type of metal needed.)

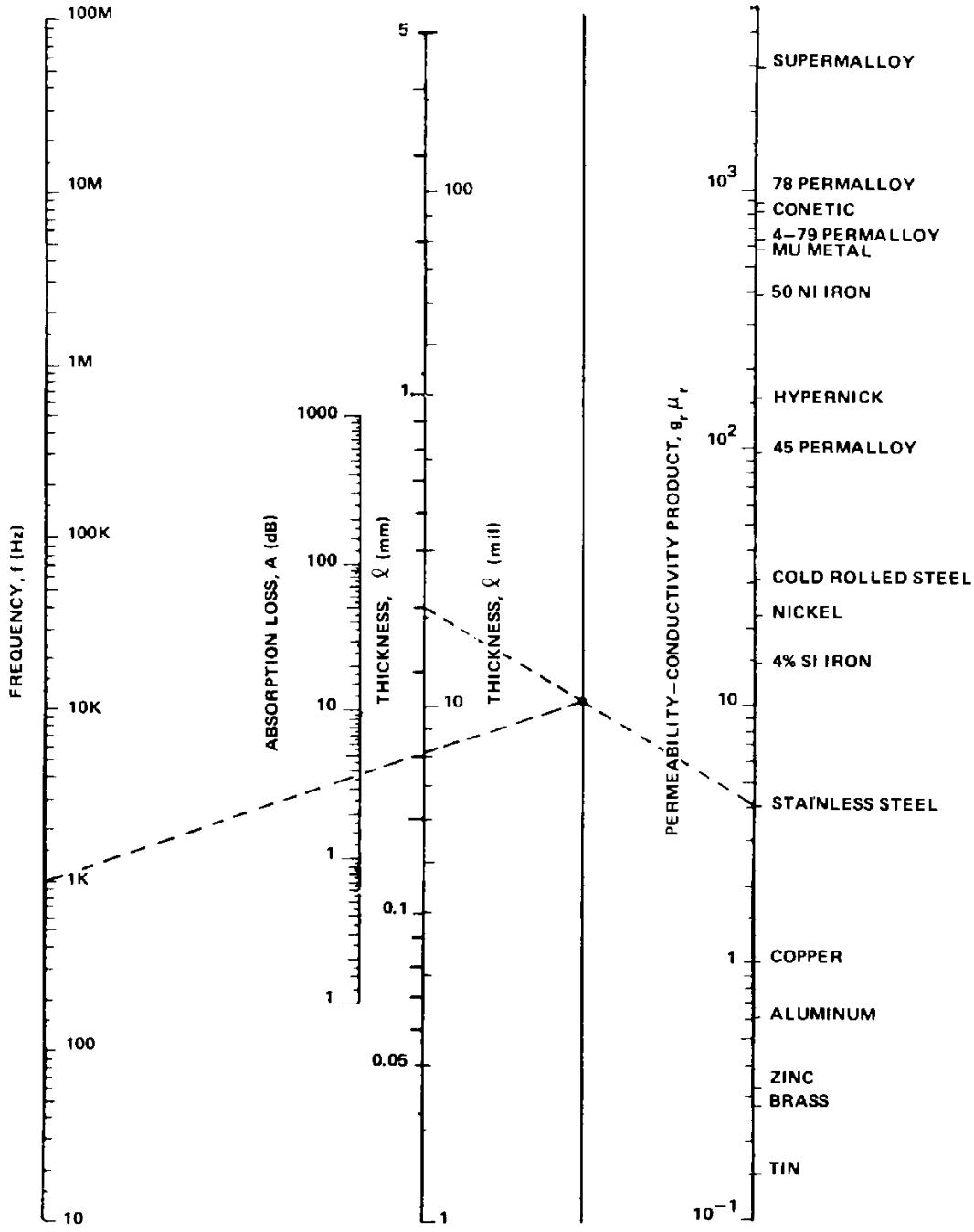

Figure 1-85. Shield Absorption Loss Nomograph (1-17)

c. The total shielding effectiveness is the sum of the absorption loss and the reflection loss. Use Figure 1-86 to determine the reflection loss of various metals to magnetic fields; use the nomograph of Figure 1-87 to determine the reflection loss of electric fields. The procedures for using these nomography are similar to that described previously for determining absorption loss. Note that the right hand scale is based on the ratio of relative conductivity to relative permeability instead of the product of the two as used on the absorption loss nomograph.

Determine the reflection loss for plane waves with the use of Figure 1-88. Simply lay a straightedge between the metal of interest (or the correct g_r/μ_r ratio) on the right hand scale and the frequency of interest on the left hand scale; read the reflection loss of the scale in between.

Thin shields with low values of absorption loss can experience re-reflections which may cause the estimates of shielding effectiveness to be in error, If the absorption loss is less than 10 dB, see Volume I, Section 8.3.3 for ways to account for the effect of re-reflections.

d. Consider the use of thin metal foils for shielding high frequency (broadcast frequencies and above) plane and electric fields. Use Figures 1-89 and 1-90 to estimate the amount of shielding that can be achieved with copper and aluminum.

1.8.4 Construction Guidelines.

a. Securely ground all metal shields.

b. All seams and joints must be well bonded. Welded seams are highly desirable in enclosures which must provide a high degree ($\geq$ 80 dB) of RF shielding or are intended for EMP protection. Where welding is impractical, solder or knitted wire gaskets should be used to supplement the mechanical fasteners (see Volume I, Section 8.5.2). Figures 1-91 and 1-92 show two recommended techniques for constructing seams in shields.

c. Limit openings (windows, doors, ventilation ports) and penetrations (signal lines, power lines, utilities) to the lowest possible number and restrict their dimensions to a minimum.

(1) If holes through the shield are necessary, see Volume I, Section 8.4.3 to determine the optimum size and spacing.

(2) Use honeycomb (see Volume I, Section 8.5.3.1) for the shielding of ventilation ports wherever possible. Where forced ventilation is used through ports shielded with either honeycomb or wire mesh, predict the pressure drop with the aid of Figure 1-93. (A larger blower will generally be necessary to provide the same volume of air through a shielded port than would be required through an unshielded port.)

d. Peripherally bond metallic utility lines to the shield at the point of entrance. Nonmetallic lines entering through waveguide-below-cutoff (see Volume I, Section 8.5.3.1) ducts or tubes may also be used for water, gas, compressed air, etc.

Table 1-29

Relative Conductivity and Relative Permeability of Common Metals

Metal	Relative Conductivity (g_r)	Relative Permeability (μ_r) Initial	Relative Permeability (μ_r) Maximum	Comments
Alfenol	.011	3,450	116,000	
Beryllium	.377	1		
Brass	.442	1		66% Cu, 34% Zn
Cadmium	.230	1		
Chromax	.017			15% Cr, 35% Ni, 50% Fe
Chromium	.663	1		
Cobalt	.177	70	250	
Constantan	.039			55% Cu, 45% Ni
Copper	1.000	1		Commercial annealed
Gold	.707	1		
HyMu80	.030	20,000	100,000	80% Ni, 20% Fe
Iron, pure	.178	25,000	350,000	Annealed
Iron, Swedish	.172	250	5,500	
Iron, cast	.057	100	600	
Kovar A	.006			29% Ni, 17% Co, 0.3% Mn, 53.7% Fe
Lead	.079	1		
Magnesium	.387	1		
Manganin	.039			84% Cu, 12% Mn, 4% Ni
Monel Metal	.041			67% Ni, 30% Cu, 1.4% Fe, 1% Mn
Mumetal	.034 - .069	20,000	100,000	71-78% Ni, 4.3-6% Cu, 0-2% Cr, bal. Fe
Nickel	.250	110	600	
Nickel-silver	.062			64% Cu, 18% Zn, 18% Ni
Palladium	.160	1		
Permalloy	.038	2,500	25,000	45% Ni, 55% Fe
Permendure	.066	800	4,500	50% Co, 1-2% V, bal. Fe
Platinum	.164	1		
Rhodium	.338	1		
Rhometal	.019	1,000	5,000	36% Ni, 64% Fe

Table 1-29 (Continued)

Relative Conductivity and Relative Permeability of Common Metals

Metal	Relative Conductivity (g_r)	Relative Permeability (μ_r) Initial	Relative Permeability (μ_r) Maximum	Comments
Sendust	.022 - .029	30,000	120,000	10% Si, 5% Al, 85% Fe (cast)
Silver	1.064	1		
Steel	.078 - .133	50	100	0.4%-0.5% C, bal. Fe
Steel, manganese	.025			13% Mn, 1% C, 86% Fe
Steel, silicon	.034	500	7,000	4% Si, 96% Fe (hot rolled)
Steel, stainless	.019			0.1% C, 18% Cr, 8% Ni, 73.9% Fe
Supermalloy	.029	100,000	1,000,000	79% Ni, 5% Mo, 16% Fe
Tin	.151	1		
Titanium	.036	1		
Tungsten	.315	1		
Zinc	.287	1		

e. Cover all openings required for visual access with wire screen or conductive glass (see Volume I, Section 8.5.3.2). Insure that the screen or glass is carefully bonded to the enclosure around the perimeter of the opening.

f. Doors should be metal with solid, uniform contact around the edges. Wire mesh gaskets or finger stock should be provided.

g. For large shielded enclosures where high traffic volume is expected, consider the use of waveguide-below-cutoff hallways.

1.9 COMMON-MODE NOISE AND INSTRUMENTATION. There are several steps which can be taken during the design and construction stages of a facility to minimize subsequent common-mode noise problems in instrumentation, equipment, and systems. The recommended steps should be recognized as being appropriate for interference control in general and not limited strictly to common-mode noise.

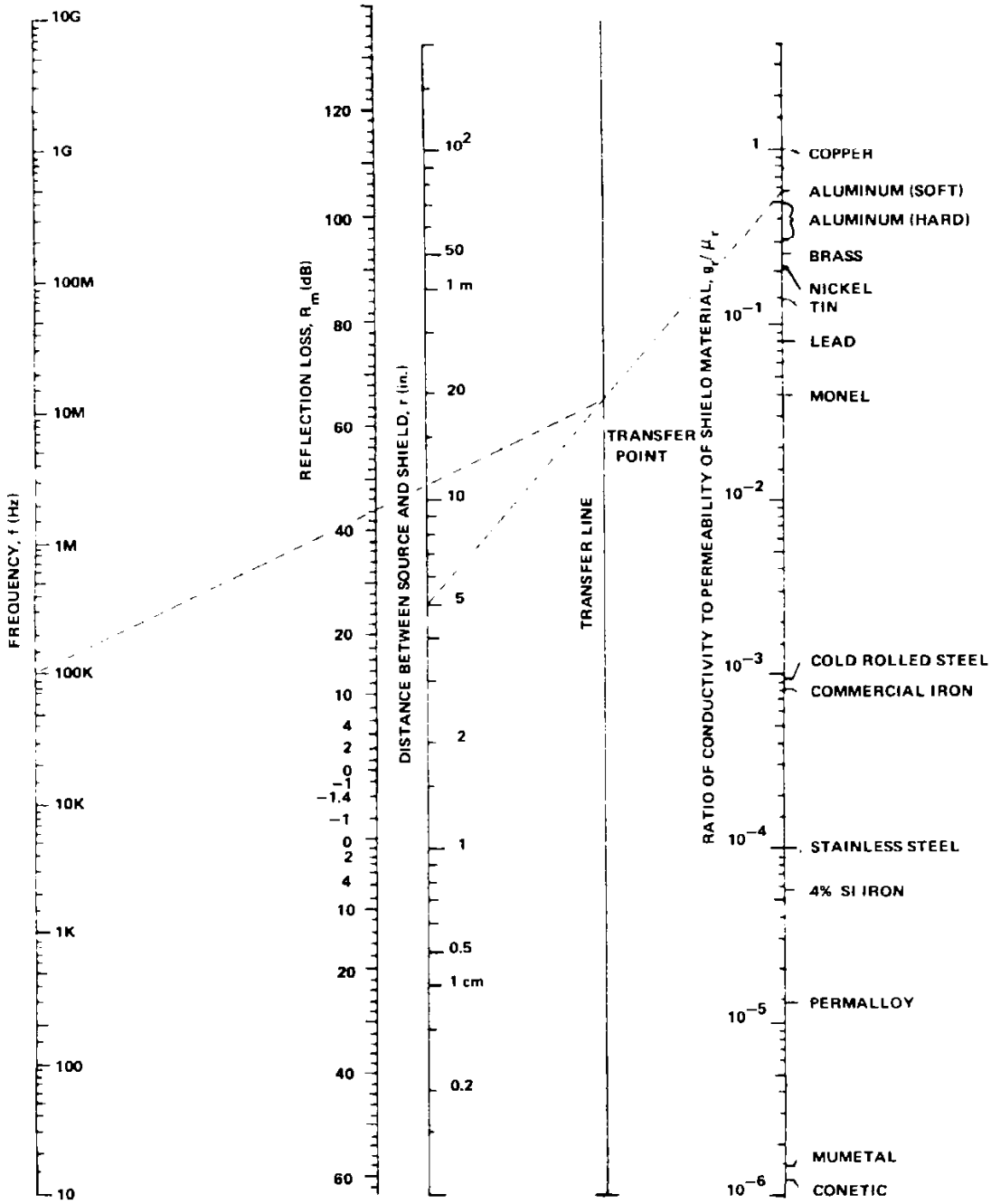

Figure 1-86. Nomograph for Determining Magnetic Field Reflection Loss (1-17)

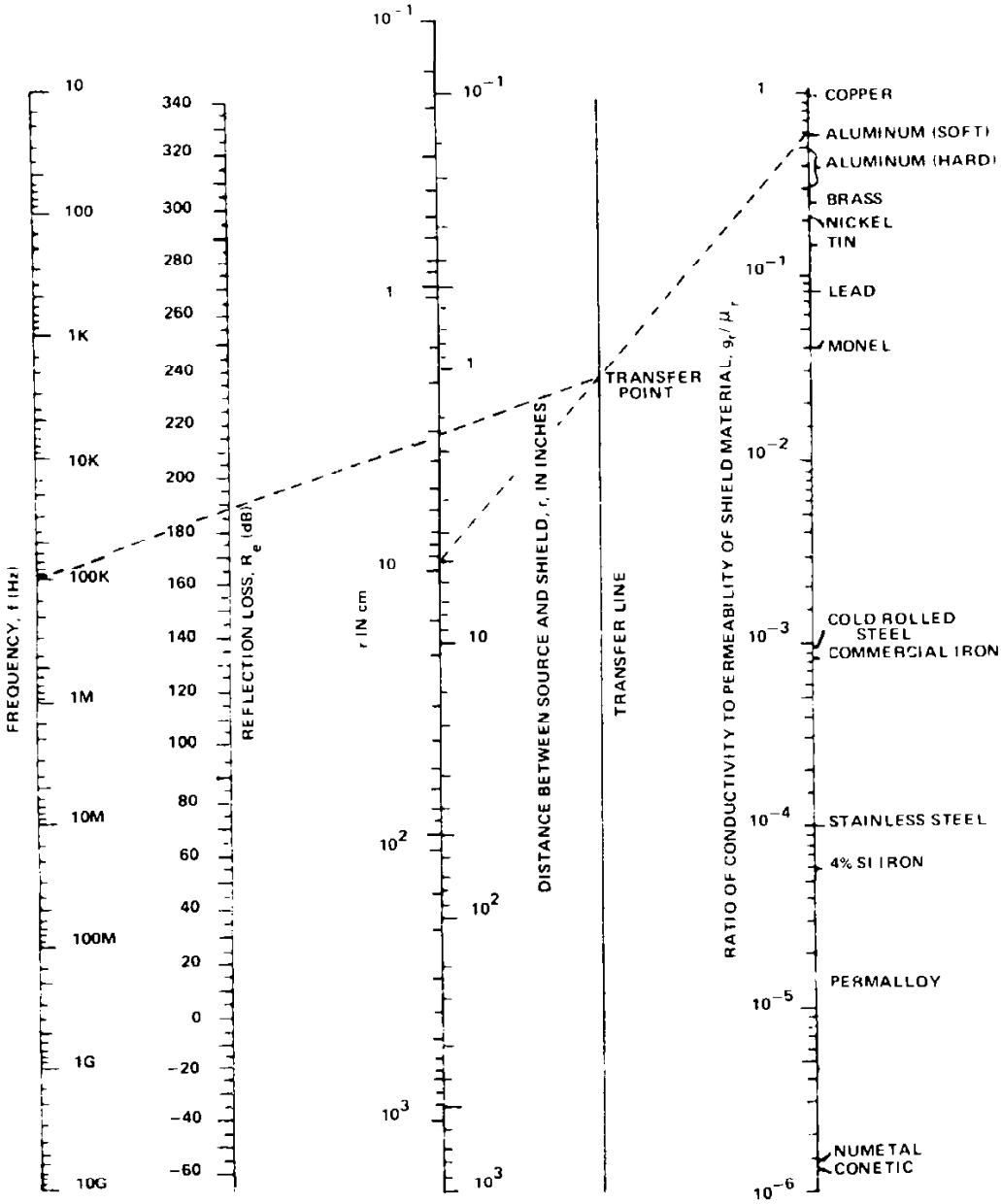

Figure 1-87. Nomograph for Determining Electric Field Reflection Loss (1-17)

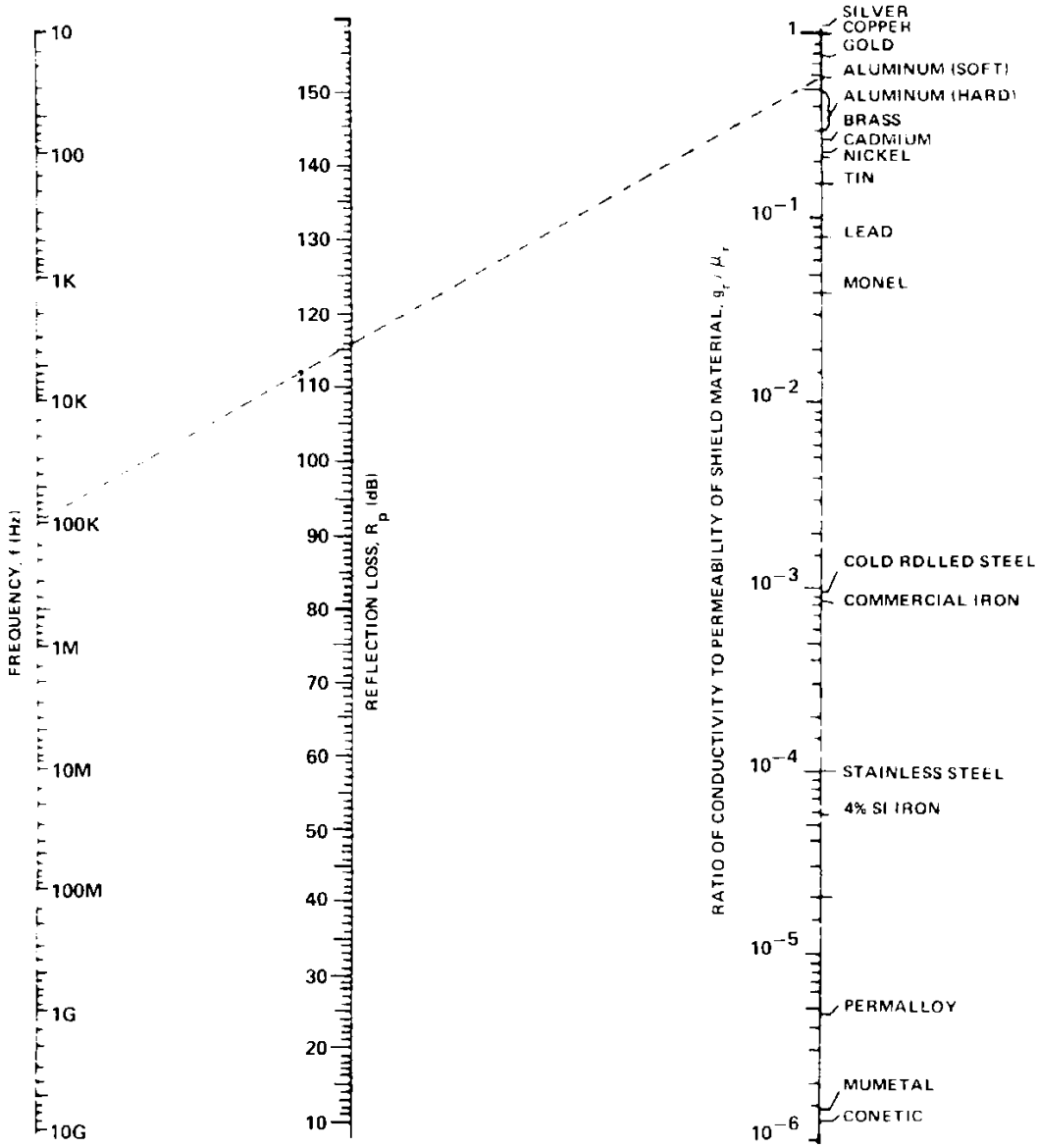

Figure l-88. Nomograph for Determining Plane Wave Reflection Loss (l-l7)

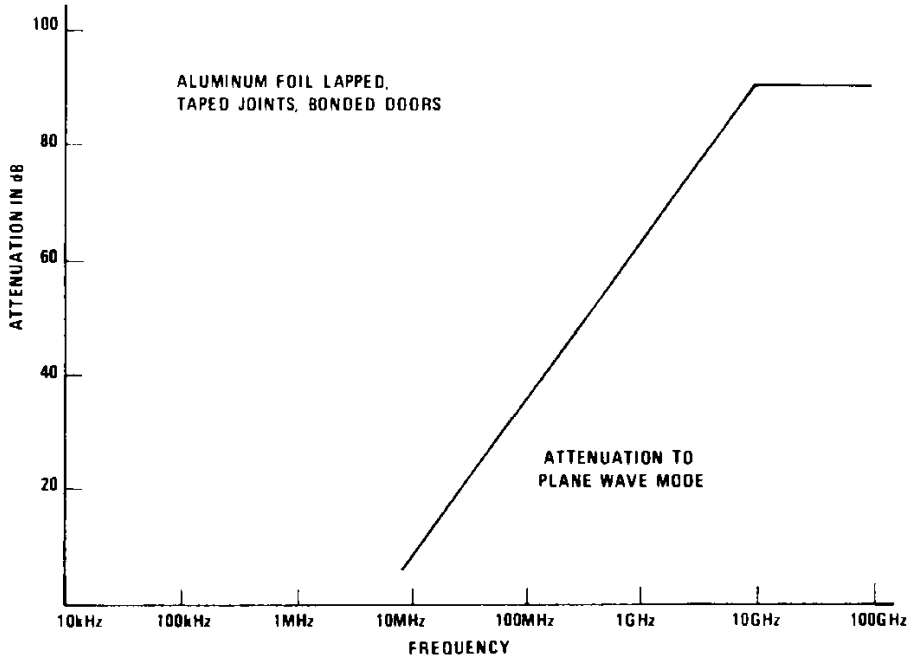

Figure 1-89. Shielding Effectiveness of Aluminum Foil Shielded Room (1-18)

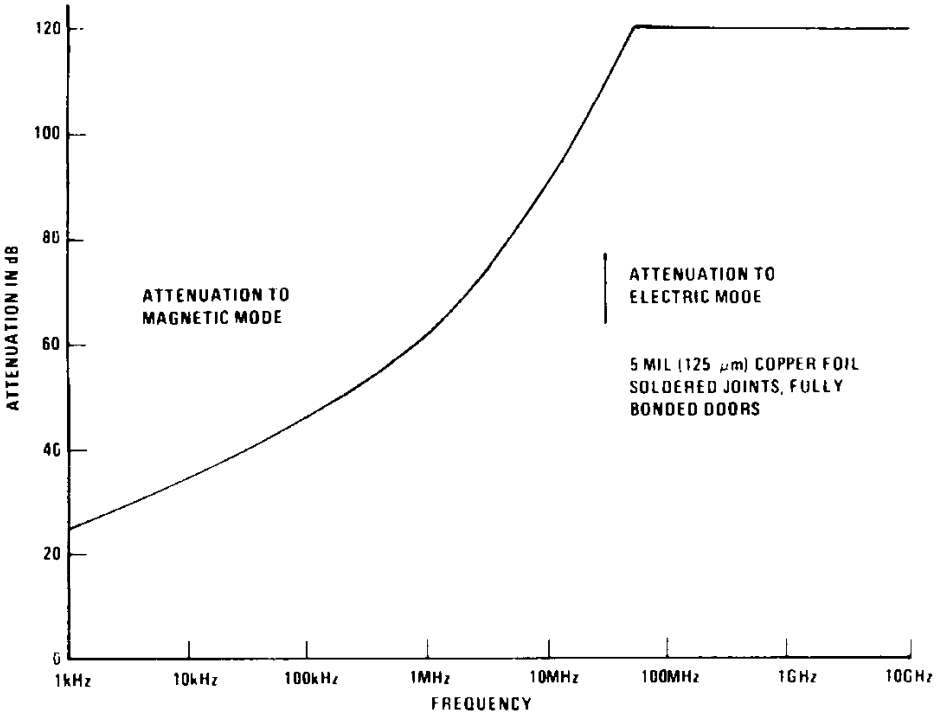

Figure 1-90. Shielding Effectiveness of Copper Foil Shielded Room (l-l8)

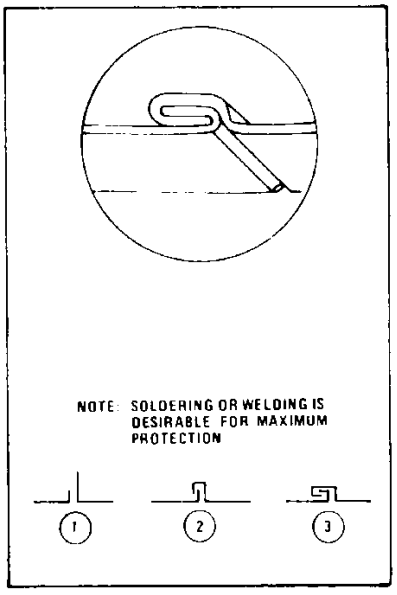

Figure 1-91. Formation of Permanent Overlap Seam

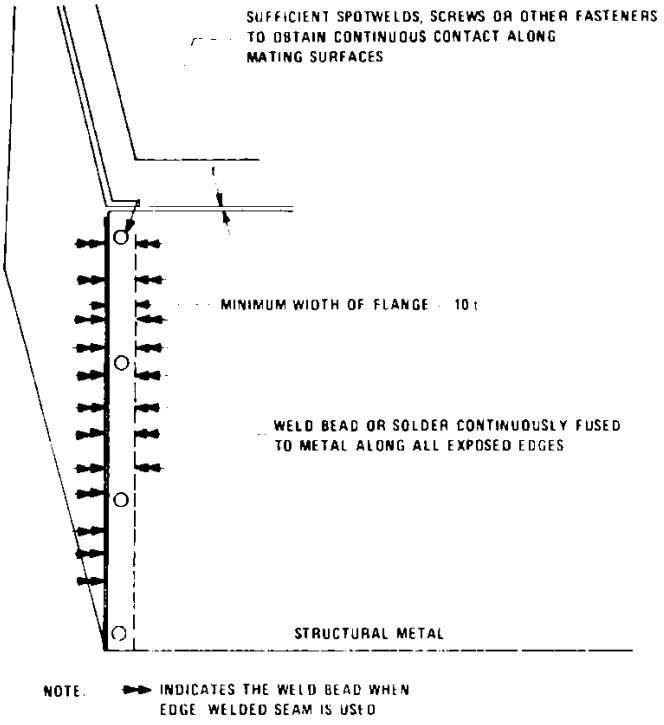

Figure 1-92. Good Corner Seam Design

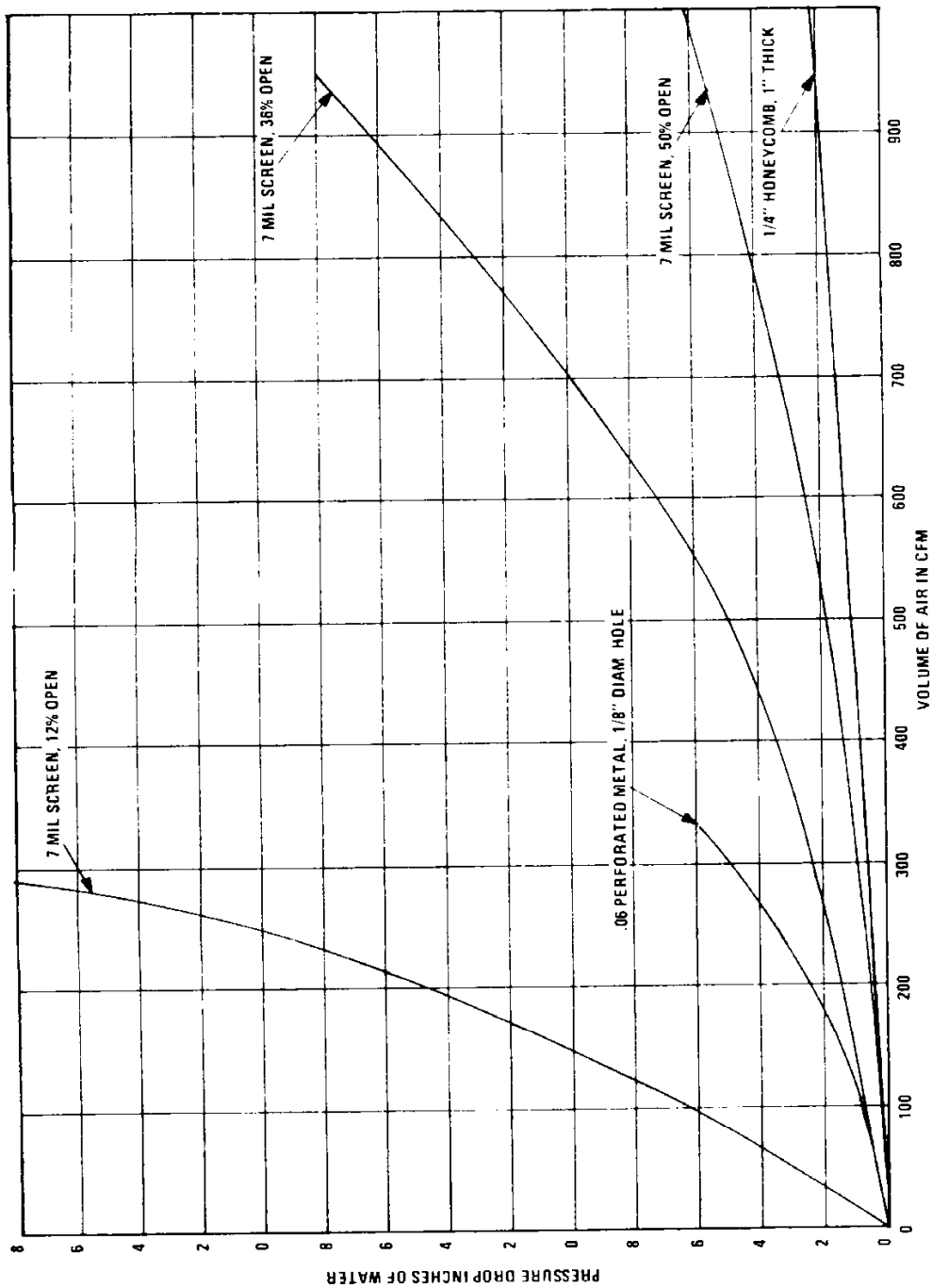

Figure 1-93. Pressure Drop Through Various Materials Used to Shield Ventilation Openings

1.9.1 Design Practices.

a. Sensitive data and instrumentation facilities should be located as far as possible from high voltage (66 kV and above) transmission lines.

b. The routing of data and signal lines should be perpendicular to main power lines wherever possible. Where parallel runs cannot be avoided, maximum separation must be maintained. In many instances, routing of the data and signal cables in ferrous conduit may be necessary.

c. Distribution feeders to the facility should be routed perpendicularly to high voltage power lines, if possible. In any event, long parallel runs between distribution feeders and the main power line should be avoided.

d. Where overhead distribution lines are necessary, pre-assembled aerial cable should be used in preference to open wires. Since the conductors of pre-assembled aerial cable are twisted, the associated magnetic field is greatly reduced.

e. All internal distribution power conductors near sensitive test and measurement facilities and carrying more than 5 amperes should be twisted. A suggested rate of twist is one complete twist for each length equal to approximately 25 times the diameter of the insulated power conductor.

f. Metallic enclosures should be used for power conductors wherever possible to take advantage of the shielding they offer. In order of preference, the types of enclosures recommended are:

(1) Conduit. From the standpoint of noise reduction, rigid steel conduit is the most effective enclosure for power conductors and should be used wherever practical. Electrical metallic tubing (EMT) and rigid aluminum or copper conduit provide effective electrostatic shielding, but their magnetic shielding properties are at least an order-of-magnitude poorer than rigid steel conduit.

(2) Cable armor. Armored cable is sometimes used in lieu of conduit and individual insulated conductors. The armor provides an effective electrostatic shield but is not as effective as rigid steel conduit for magnetic shielding. Steel armor is preferable to aluminum or bronze.

(3) Flexible conduit. Because of its construction, standard construction grade flexible conduit is a poorer electrostatic shield than either of the above and provides considerably less magnetic shielding than rigid steel conduit. It is recommended that the use of flexible conduit be restricted to short lengths and only where required to absorb vibration or to permit position adjustment of the equipment or device served.

(4) Wireway or cable tray. Wireways, which are rectangular sheet metal duct-like enclosures, and cable trays are not nearly as effective for electrostatic or magnetic shields as rigid steel conduit. Unless the wireway or cable tray is made of a ferrous metal and all discontinuities are carefully bonded, its use for the shielding of power conductors should be limited.

g. Electrical power equipment such as transformers, line voltage regulators, motors, generators, and switching devices should be separated as far as possible from data system equipment and conductors. The architectural arrangement of the facility should allow for the maximum distance between these devices and the data systems. This requirement also applies to heating, ventilating, and air conditioning equipment which utilize electric motors and high amperage switching devices. The maximum distance will be limited by the voltage drop which can be tolerated in feeders to the system equipment.

h. Use squirrel cage induction motors, which do not utilize slip rings or commutators, wherever possible.

i. Where necessary to specify motors with commutators, specify those properly designed to minimize arcing. Arcing at the commutator or slip rings can be decreased by careful mechanical design such as requiring adequately sized shafts and bearings which maintain concentricity to minimize brush bounce and vibration.

1.9.2 Instrumentation Considerations. Where transducers and associated processing devices are to be installed as an integral part of a facility, the instrumentation system must be designed and installed such that it does not compromise the single-point signal ground networks used by other lower frequency systems. In particular, where the systems interface, care must be utilized to assure that the grounding integrity of each is maintained.

Derive the ac power for the test equipment from the same branch circuit supplying the equipment or system being measured. If this practice raises system reliability problems, low amperage breakers or fuses should be provided for the test equipment outlets. If the outlets for test equipment cannot be connected to the branch circuits feeding the primary equipment, then the test equipment branch circuit should be restricted only to test equipment use. In particular, rotating machinery, industrial machines, appliances, vending and office machines, and any other non-EMI protected equipment should not be connected to that branch circuit.

1.10 EMP PROTECTION. EMP protective measures are based on intercepting the incident energy and dissipating it or reflecting it away from the threatened device, equipment, or facility. These measures are implemented by providing adequate metal shielding around the facility (or the equipment inside); by installing fast response surge arresters on power, signal, and control lines; by terminating the shields and arresters in an earthing connection offering a low impulse impedance; by carefully controlling the points of penetration of collectors; and, finally, by paying particular attention to all bonds throughout the protective system.

1.10.1 Earth Connection. A radial, or star, configuration is preferred to other types of earth electrode subsystems because of its lower impulse impedance (see Volume I, Section 2.6.3). Where ENIP protection is to be provided in addition to conventional signal and safety protection, supplemental radials may be added to the conventional system.

One low-impulse impedance radial should be placed at each location where there are over voltage arresters or protectors on incoming external lines or conductors. An example of such a location is the point where commercial power lines enter the first stepdown transformer. Another location is at the point where external conductors enter the shelter itself and where protectors or arresters are located.

Water pipes or conduit should be connected to the earth electrode subsystem to prevent ground currents from entering the structure. Further, at the first service disconnect the ac neutral should be grounded at only one point (to EES) to prevent the possibility of damage to transformers from circulating currents. This does not negate the NEC requirement to ground the neutral at the transformer.

1.10.2 EMP Shield Applications.

a. Whenever feasible, shielding of the overall building should be done in preference to room or area protection. Individual room or area shields should only be utilized to provide additional protection of critical equipment when normal protective methods will not reduce EMP to an acceptable level, or where, in retrofitting an existing structure, the cost of protecting the entire building is excessive.

b. Commercial enclosures may be used for small rooms and bolted construction is acceptable. For large room construction, however, continuously welded steel is preferred.

c. Electrical wiring and components should be protected from EMP fields by a shield such as ferrous conduit, RF shielded raceway, or cable armor, that completely surrounds the items to be protected. Electronic components may be shielded with sheet metal housings.

d. All metallic penetrations of the facility shielding should enter at a common location as illustrated in Figure 1-94. All shielded cables, conduits, and pipes should be bonded to an entry plate as shown in Figure 1-95. This plate should be large enough so that no penetrations will occur within 1 foot of the nearest edge. The entrance plate should be continuously welded, around its perimeter, to the building shield. The conduit should be of steel with threaded or welded couplings. Conduit runs should be as short as practical with joints held to a minimum. Transient protection for cables entering a building at points away from the building entry plate is provided by following procedures outlined in Section 1.3.3.5.26.

1.10.3 EMP Bonding Practices.

a. Homogeneous welds should be used whenever possible because they offer the best protection against penetration of the EMP signal.

b. When bolts are used as fasteners, the body of the bolt should not be welded or brazed. The nut and washers should be located inside the shield region where they will not be exposed to the incident field. Nuts should be checked for tightness periodically during EMP hardness assurance test cycles.

c. Pipes, conduit, and connector shells should be welded or brazed to the shield completely around their perimeter at the point of penetration of the shielded region. Conductors used for grounding purposes shall not penetrate any metallic barrier designated as an EMP shield, i.e., shielded enclosure, EMP vault etc., but shall rather be bonded to a welded stud on the barrier.

d. Indirect bonding jumpers and straps should be as wide as practical and as short as possible to minimize the inductance of the path for the EMP-induced current.

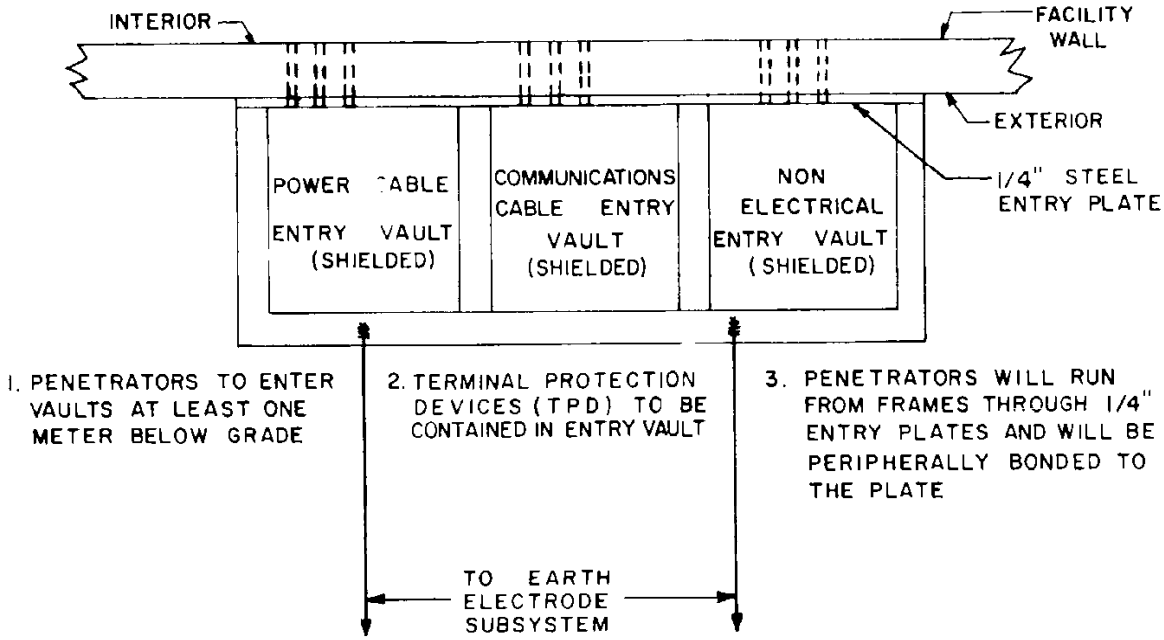

Figure 1-94. Typical Single-Point Entry for Exterior Penetrations (Top View)

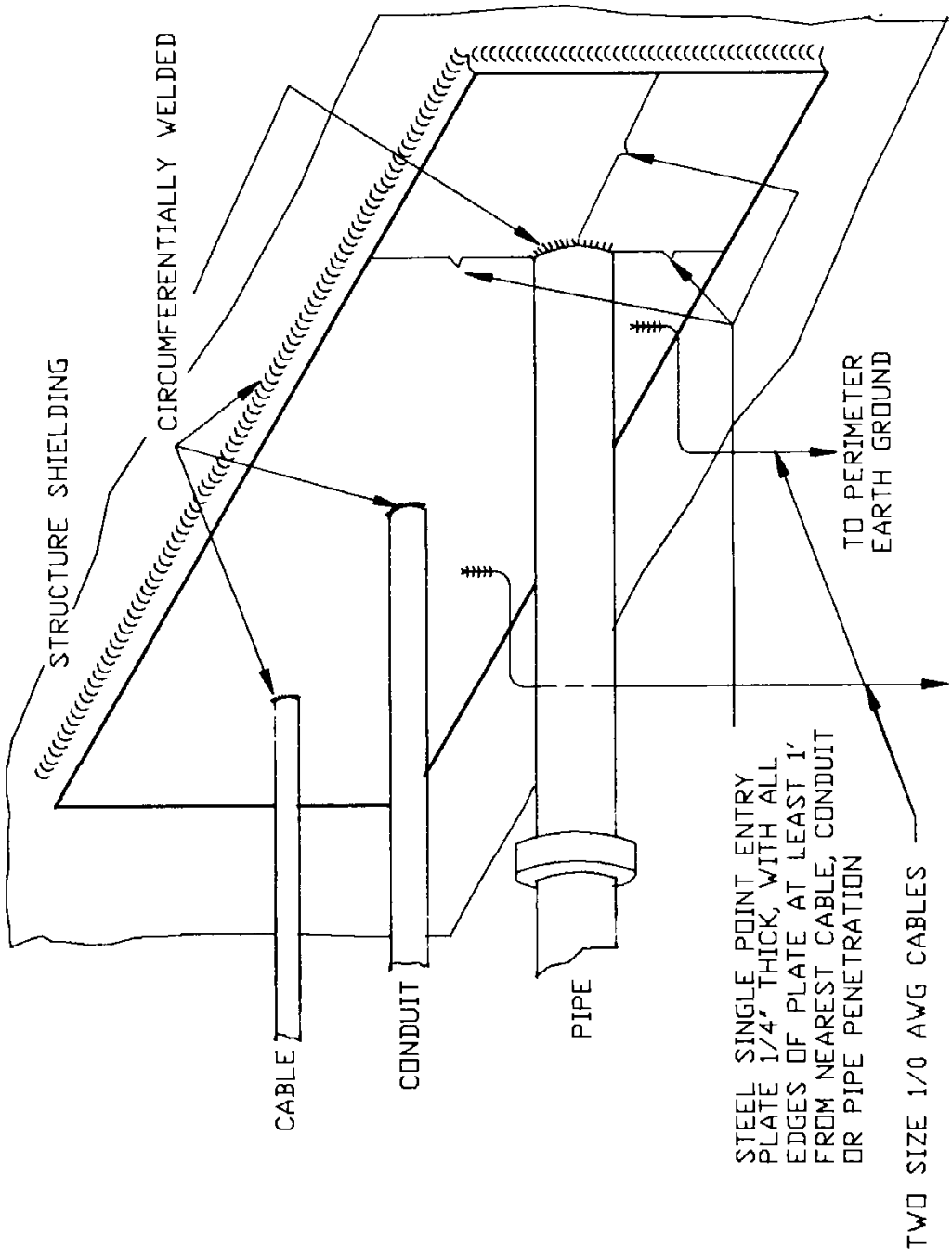

Figure 1-95. Entry Plate Showing Rigid Cable, Conduit, and Pipe Penetrations

1.10.4 Construction Guidelines (1-14). The following is a list of additional construction practices which have proven effective in reducing problems of EMP interference and/or instrumental damage:

a. Isolate power by using internal motor-generator sources and installing lightning arresters on lines.

b. Put all external wires in continuous, properly grounded ferrous conduit.

c. Screen over air-conditioning ducts, where they enter shielded areas, must be peripherally bonded to the shield.

d. Interconnect the steel reinforcing bars in concrete into the shielding and grounding systems for the structure.

e. Use lightning arresters on power station transformers.

f. Provide all surge arresters with shortest possible leads.

g. Ground cable outer shields and insure that the shields are continuous and closed throughout their lengths.

h. Bury power and signal cables in ferrous conduit as deeply as is economically feasible (greater than 0.9 meter (3 feet)) to reduce current surges and to slope wave fronts induced on the cables.

i. Install transient protective devices (TPD's) on all antennas and other electric lines exposed to the external environment.

j. Educate personnel in proper protection practices; for example, extension cords connected to outside plugs should not be brought into shielded areas.

k. Bond together and ground all nonelectrical conductors such as elevator cables, metal airducts, and storage cabinets.

l. All conduit penetrations must be peripherally bonded to the shield.

m. Avoid use of nonconducting lubricants when fastening conduit pipes together.

n. Ensure that a low resistance circumferential electrical weld exists wherever conduit penetrates the EMP barrier.

o. When closed, the cover should provide peripheral contact with the box.

p. Either use adequate surge protection on oil-filled transformers and other high voltage gear tc prevent explosions or use only dry transformers inside the shielded enclosure.

q. Provide adequate surge protection for emergency power equipment.

r. Do not rely on fuses or circuit breakers for EMP protection.

s. Provide automatically closing doors in preference to manually closed doors.

t. Put single-phase protection on each phase of 3-phase power systems as well as on the neutral.

u. Use passive low pass L-C radio interference filters on signal, control, and telephone lines.

v. Since electromagnetic fields in the corners of a shielded structure are usually higher than in other parts of the structure, when convenient do not locate known sensitive equipments in corners.

1.11 MILITARY MOBILE FACILITIES.

1.11.1 General Tactical Grounding Requirements.

1.11.1.1 Facility Ground System. The facility ground system connects any metallic element of the associated subsystems to earth by way of an earth-electrode configuration. It establishes a reference potential common to any equipment or subsystem, and makes the ground potential available throughout the system. This section describes the four subsystems that comprise the facility ground system and should be addressed during the design and installation of any electrical and electronic equipment, subsystem, and system. Although, it is not possible to have a fixed set of rules governing the grounding of all conceivable electrical or electronic equipment or system configurations, the guidelines presented here should be adapted to the requirements of a particular tactical installation.

1.11.1.1.1 Earth Ground. A good, basic earth ground or earth electrode subsystem is the fundamental network for establishing a ground point for the three remaining ground subsystems; lightning/EMP, signal reference, and fault protection. An ideal earth electrode subsystem will provide a common potential reference point anywhere in the system to eliminate undesirable voltages and currents.

1.11.1.1.1.1 General Earth Electrode Subsystem Requirements. An earth electrode subsystem is a network of electrically interconnected rods, plates, mats, or grids installed with a system to establish a low-resistance contact with earth. As a design objective, the dc resistance to earth of the earth electrode subsystem should not exceed 10 ohms.

1.11.1.1.1.2 Earth Electrode Subsystem Types. There are earth electrode subsystems for the following two types of facilities:

a. Fixed Site Facilities. Descriptions of earth electrode subsystems installed in fixed facility or semi-permanent buildings or installations are contained in Sections 1.2 and 1.4.

b. Tactical Facilities. Tactical earth electrode subsystems are connected to existing buried low resistance facilities, if available, or to driven ground rods or ground-rod configurations. Total resistance to earth is affected by the type of soil, contact resistance between ground rod and soil, and by the connector resistance.

1.11.1.1.1.3 Soil Resistance. Resistivity of the soil into which the earth electrode subsystem is buried constitutes a basic constraint on achieving low ground resistance. Soil resistivity, measured in ohm-m, is defined as the electrical resistance of a cube of homogeneous material (soil). Table 1-30 contains sample resistivity values of various soil types. Soil temperature and moisture content are other variables affecting ground resistance. Ground resistance increases inversely as the soil temperature with only slight changes in ground resistance occurring above 32 degrees Fahrenheit. Soil resistance also varies widely as a function of moisture content. Additional information on soil resistance is contained in Sections 1.2.2 and 1.2.3 of this Volume, and Section 2.3 of Volume I.

1.11.1.1.1.4 Ground Rod Resistance. Ground rod resistance is primarily a function of the depth the rod is driven into the earth and the soil resistivity. Theoretically, the resistance (R) of a ground rod driven vertically into uniform soil is:

$$R = \frac{\rho}{2\pi\ell} \ln \frac{4\ell}{d} \qquad (1\text{-}3)$$

where ρ is the resistivity of the soil, ℓ and d are the rods length and diameter, respectively. Figure 1-96 illustrates the measured effect of rod length on total ground resistance.

1.11.1.1.1.5 Ground Resistance Shells. Associated with a driven ground rod injected with current are imaginary ground resistance shells. The concentric shells of resistance outward from the rod are a function of the earth's resistance to flow of current. The shell having the smallest cross-sectional area closest to the ground rod will exhibit the largest incremental resistance. Approximately 90 percent of the shells of total resistance to the earth occur, on the average, within a radius of two rod lengths from the electrode.

1.11.1.1.2 Power Ground. Power supplied to tactically-deployed equipments and systems may be derived from three sources; transportable ac power generators, commercially-available ac power, and battery supplied dc power. The ac neutrals are always floated on the load side of the first service disconnect within the shelter. The 5-wire system described in 1.11.1.1.2.1 is preferred for new systems. If multiple shelters are serviced from a single power source (transformer or generator), or if hum is encountered, the neutral conductor should be grounded at the source only.

1.11.1.1.2.l Three-Phase Power Distribution System. Transportable power generators presently used with military mobile equipments are 3-phase, 4-wire, 120/240 V ac wye distribution systems. Ground points of **a** 3-phase wye system are illustrated in Figure 1-97. Five-wire ac power grounding requires that the neutral (white) or grounded conductor be connected to an earth ground at the source (generator or transformer) and again at the supply side of the first service disconnect/power entry panel (PEP). The grounding (green) conductor should also be connected to earth ground at the first service disconnect and at the transformer.

Table 1-30. Soil Resistivity (ohm-m)

Type of Soil	Resistivity Minimum	Resistivity Average	Resistivity Maximum
Sandy, dry, flat, typical coastal areas	3×10^4	5×10^4	5×10^5
Fills, ashes, cinders, brine, waste	6×10^2	2.5×10^3	7×10^3
Clay, shale, gumbo, loam	3×10^2	4×10^3	2×10^4
Same as above with varying proportion of sand and gravel	10^3	1.5×10^4	10^5
Gravel sandstones with little clay, loam, or granite	5×10^4	10^5	10^6

1.11.1.1.2.2 Single-Phase Power Distribution System. Commercially-supplied ac power is single-phase, 110/220V. Power neutral of these systems is first grounded at the transformer secondary and also at the first service disconnect. Figure 1-98 illustrates the ground connections of a single-phase power system.

1.11.1.1.2.3 DC Power System (2-Wire). A 2-wire dc power generator is grounded by connecting either the positive or negative conductor to ground at one point only, preferably at the source. The neutral (or grounded) conductor should not be grounded at the Power Entry Panel (PEP). Figure 1-99 shows the ground connections for the 28 V dc power system. The 3-wire dc power system requires that the neutral wire (white) or grounded conductor be connected to the earth ground at the source (generator or transformer) only.

1.11.1.1.3 Lightning/EMP Protection Subsystem. Low resistance earth grounds are important for lightning/EMP ground subsystems. For these subsystems, low resistances to earth are necessary to reduce the possibility of arcing generated by potential differences between the earth and nearby equipments or shelters and to reduce step potentials and voltage gradients in the vicinity where a lightning discharge enters the earth. See Sections 2.8.1.3 and 3.6.3.4 of Volume I for additional information. The need for lightning protection in a tactical environment is determined by the frequency and intensity of lightning activity in the area and by the type of structures needing protection. The lightning protection subsystem down conductor should be connected to the earth electrode subsystem at a point removed from the signal reference and fault protection subsystem. Two general ways of protecting against lightning damage are air terminals and surge protection devices.

1.11.1.1.3.1 Air Terminals. To protect a shelter from damage caused by a lightning stroke, an air terminal of adequate mechanical strength, length, and electrical conductivity to withstand the stroke must be provided to intercept the discharge before it penetrates the structure. A low-impedance path (cable) must be established between the air terminal and earth electrode subsystem. The resistance of the earth electrode subsystem should be less than 10 ohms. Detailed construction of air terminal systems are given in Section 1.3.2.1.

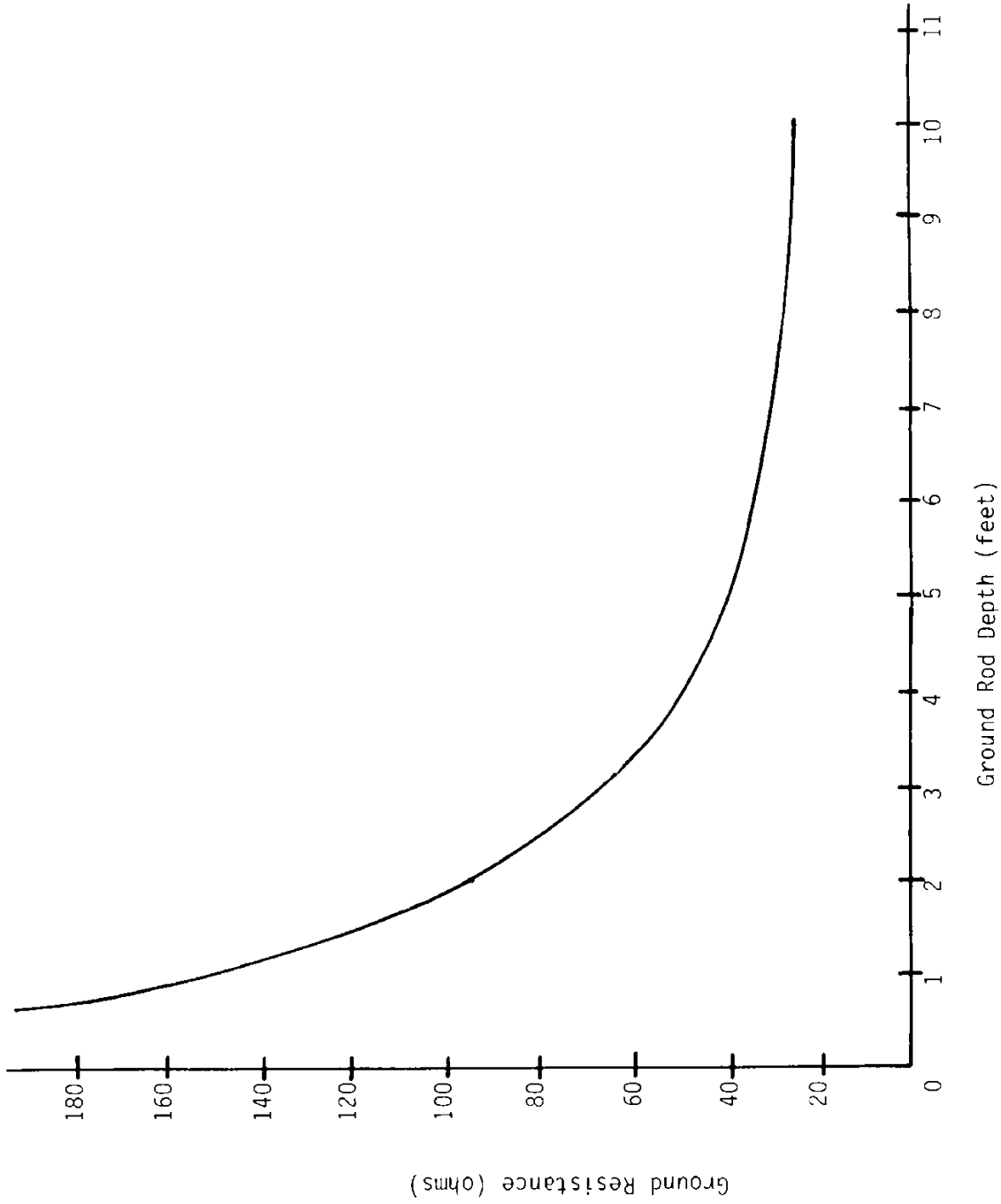

Figure 1-96. Effect of Rod Length on Ground Resistance

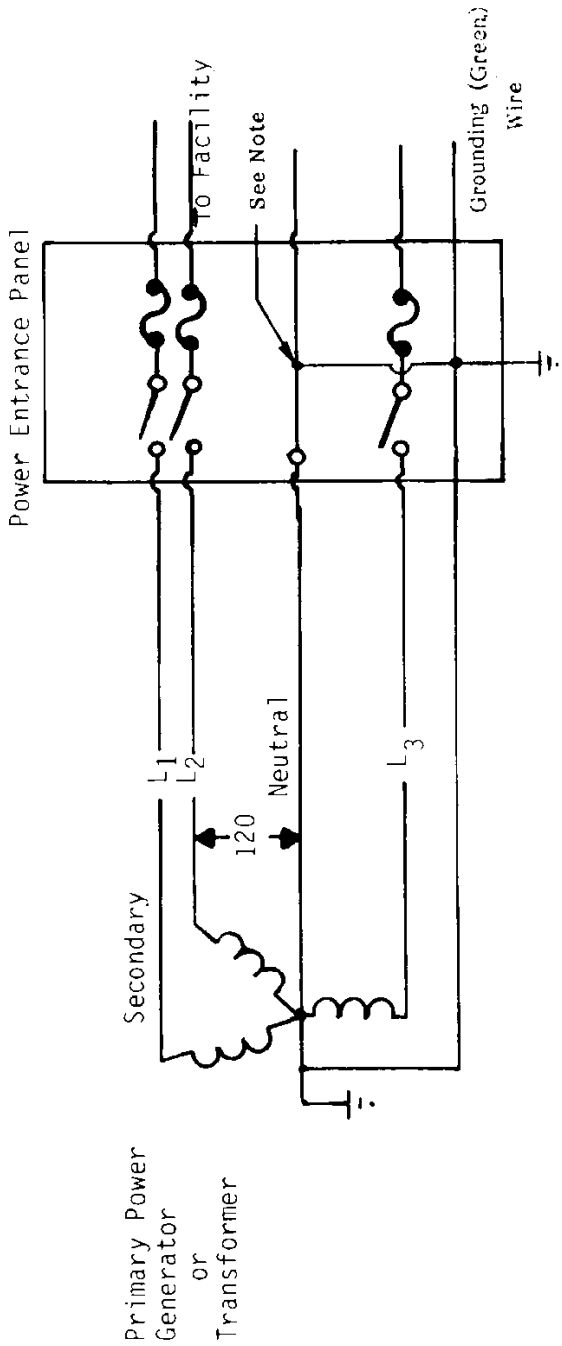

NOTE: LIFT WHEN SINGLE TRANSFORMER SUPPLIES POWER TO MORE THAN ONE BUILDING OR BECAUSE OF OBJECTIONABLE CURRENT, NOISE OR INTERFERENCE.

Figure 1-97. Grounding of 120/208V 3-Phase, 4-Wire Wye Power Distribution System

1.11.1.1.3.2 Terminal Protection Devices. Terminal Protection Devices (TPDs) and electromagnetic shields provide additional means of lightning and/or EMP protection (Section 1.3.3.5.11). The TPDs are fast-response protection devices installed on exposed circuits such as power lines, signal, and control cables. Lead lengths of each TPD shall be kept to an absolute minimum. They are installed on lines for the purpose of shunting extraneous pulses to ground and are typically installed on signal and power lines at their point-of-entry into a shelter's signal entry panel. Examples of commonly used terminal protection devices are carbon blocks, gas-filled spark gaps, zener diodes, and EMI power and signal line filters. Surge arresters used to protect a system against lightning may serve to protect it against certain types of EMP given the response time of the arrester is properly designed (see Volume I, Section 10.4.2.3).

1.11.1.1.4 Signal Reference Subsystem. Grounding techniques used in the signal reference subsystem are a function of operating frequencies. Lower frequency circuits (30 kHz and below) shall be single point grounded. Higher frequency circuits (above 30 kHz) shall employ an equipotential plane which may, in the case of a metallic van or shelter, be the skin of the housing. All equipment cases or cabinets must be bonded to the equipotential planes by the shortest and most direct route. in fixed site facilities an equipotential plane will be installed in accordance with Section 1.5.1. If a combination of both higher and lower frequencies circuits exist, use the higher frequency signal ground technique. All digital circuits are considered higher frequency signal circuits. Signal reference subsystems, in a multishelter configuration shall be bonded to a common earth electrode subsystem at one point only to minimize inter-shelter interference on signal cabling.

1.11.1.1.5 Fault Protection Subsystem. The fault protection subsystem (grounding/green conductor) shall be designed to carry current only in the event of equipment or system faults. The fault protection subsystem includes equipment racks, cabinets, conduit, junction boxes, raceways, ductwork, pipes and other normally non–current carrying metal elements. For shelterized equipments, the fault protection subsystem is connected to the earth electrode subsystem via the power entrance panel. Care should be taken to ensure the fault protection subsystem and the signal reference subsystem are not connected to the earth electrode subsystem at the same point.

1.11.1.2 Measuring Ground Resistance in Tactical Environments. The resistance to earth of the earth electrode subsystem shall be measured by the fall of potential technique (see MIL-STD-188-124A para 5.1.1.1.7 or Section 2.7.2 of Volume I). If the tactical situation does not permit this method to be used, the three-point or triangulation method is an adequate substitute. Section 2.7.3 of Volume I refers.

1.11.1.3 Reducing Ground Resistance in Tactical Environments. Three basic methods should be considered for grounding tactical equipments and systems; (1) utilization of earth electrode subsystems of existing/permanent facilities, (2) utilization of recently eonfigured earth electrode, ground rod/ground rod configurations, and (3) utilization of antenna counterpoises (including radial grounds). These methods and means of reducing related resistance are described below.

1.11.1.3.1 Existing Facilities. Wherever feasible, installation of earth electrode subsystems should take advantage of the low-resistance properties of existing facilities such as water pipes, water well casings, plumblng, and other metals embedded in and in contact with the earth. Resistance of the facilities should be measured prior to use to determine if the 10 ohm or less resistance criteria is met. Use of existing facilities as grounding means is especially desirable in permafrost situations.

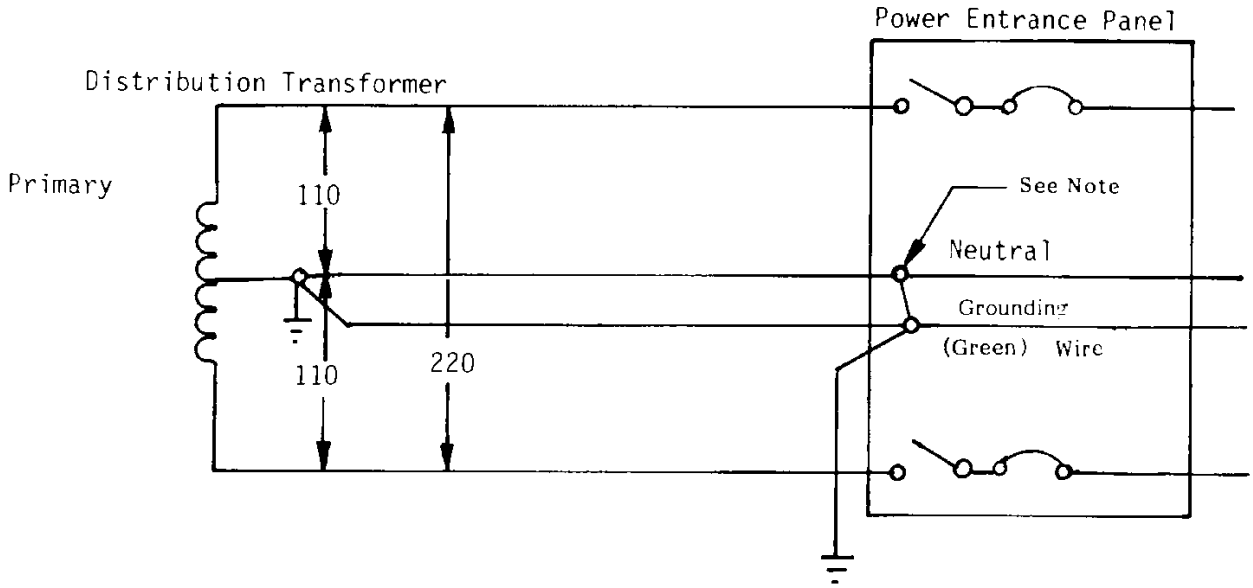

NOTE: LIFT WHEN SINGLE TRANSFORMER SUPPLIES POWER TO MORE THAN ONE BUILDING OR BECAUSE OF OBJECTIONABLE CURRENT, NOISE OR INTERFERENCE.

Figure 1-98. Grounding of Single-Phase, 3-Wire 110/220V Power System

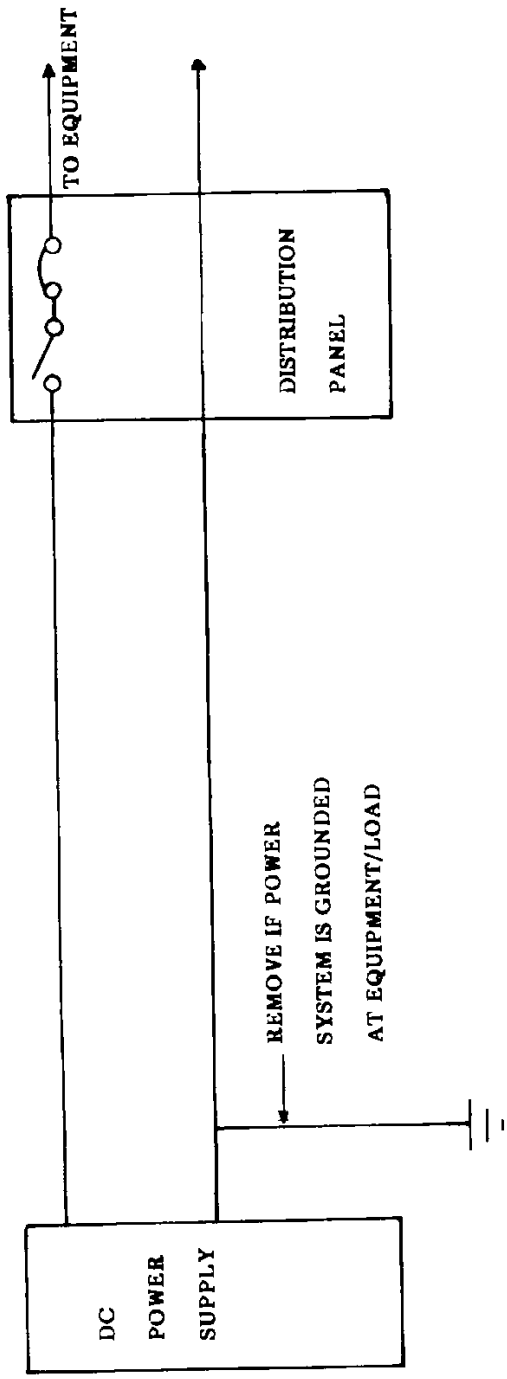

NOTE: ONE LEG OF EACH DC POWER SYSTEM SHALL BE GROUNDED BY A SINGLE CONNECTION EITHER AT THE SOURCE OR AT THE LOAD, BUT NOT BOTH.

Figure 1-99. Grounding of 28V DC 2-Wire DC Power System

1.11.1.3.2 Multiple Electrode System. The resistance of a single vertically driven ground rod may also be reduced if additional ground rods are connected in parallel with the given ground rod using a 1/0 AWG bare copper cable to interconnect the rods. It is however important to note that total system resistance is sensitive to electrode spacing. Electromagnetic interaction between multiple (74) ground rods that are spaced too closely prevents the resistance of the total earth electrode subsystem connected in parallel from being l/M times the resistance of a single rod. If the electrodes in a multiple electrode system are spaced at 1.5 to 2 times the length of a rod, the interactive influence is minimized and total resistance of the system will approach the ideal.

1.11.l.3.3 Earth Electrode Subsystem. The earth electrode subsystem should, soil and tactical conditions permitting, consist of properly spaced ground rods interconnected in parallel by a bare 1/0 AWG copper cable. The interconnecting cable for tactical situations should be clamped to the ground rods to facilitate installation and transportability. Earth electrode subsystems shown in Figures 1-9 and 1-100 may be installed around the perimeter of temporary enclosures housing several stand-alone equipments such as portable single subscriber terminals, telephone, or small switchboards. These earth electrode subsystems should extend 0.6 to 1.8 meters (2 to 6 feet) beyond the dripline of the enclosure to ensure that any form of precipitation wets the soil around the system. Earth electrode subsystems in radial or star configurations may be employed but are less suitable for (a) grounding equipments operating at rf such as radar or microwave systems, or (b) providing low impedance grounds between interfacing shelters required to lessen interference or voltage surges caused by lightning discharges. Means of calculating ground resistance of the entire earth electrode subsystem are described in Section 2.6 of Volume I while measurements of these systems are described in Section 2.7.

1.11.1.3.4 Chemical Treatment. The resistance of driven ground rods may be reduced by chemically treating the soil around the rod and the interconnecting cable/wire. Addition of ion-producing chemicals such as magnesium sulphate (epsom salts), sodium chloride (table salt), and potassium nitrate (saltpeter) as well as bentonite to the soil adjacent to an electrode has the net effect of increasing the apparent cross-sectional area of the electrode and minimizing the current density of the soil. Use of magnesium sulphate or bentonite is recommended because of their low corrosive effect on metal and high electrical conductivity. A circular trench approximately 0.3 meters (1 foot) deep and 0.9 meters (3 feet) in diameter should be dug around the electrode at a radius of 0.45 meters (1.5 feet) from the center of the electrode. The trench is filled with the saline solution and covered with earth. In order to provide the best distribution of the treating material with the least corrosive effect the solution should not actually touch the electrode. Additional information is provided in Section 2.9 of Volume I.

1.11.2 Detailed Tactical Grounding Requirements.

1.11.2.1 Introduction. It is important that serious consideration be given to grounding implementation. Proper grounding can have a significant impact on the ability to maintain communications under adverse conditions. This section contains grounding requirements for tactical deployments of mobile equipment. Grounding methods set forth are based not only on implementation considerations but also on complying with specific measured resistance requirements. The tactical deployments of mobile equipments are considered to be of four types; i.e., stand-alone equipment, stand-alone shelter, collocated equipments and collocated shelters.

1.11.2.1.1 Training. Installers and operators of communications equipment should be formally trained in the installation and maintenance concepts of grounding systems. This training should include instructions in the various types of grounding techniques and configurations, such as those listed:

Typical Training Requirements

Grounding Techniques - Resistance Measuring Methods
Reduction in Ground Resistance
Initial Establishment of Grounding Systems as a Function of Terrain

Grounding Configurations - Earth Electrode Subsystem (Single Ground Rod)
Earth Electrode Subsystem (Multiple Ground Rods)
Equipotential Plane
Antenna Counterpoises
Radial Single-Point Ground Networks
Ground Systems on a Nodal Basis

1.11.2.1.2 Testing. Ground resistance measurements should be made upon installation of a ground system and at periodic intervals should the system remain in place for any length of time, or at any time extraneous noise occurs in the system. An earth resistance measurement set should be authorized to each unit to perform these resistance measurements. The earth resistance goal of 10 ohms or less should be obtained for stand-alone and collocated equipment. Where collocated equipment systems are separated by greater than 8 meters (26.5 feet), their difference in resistance-to-ground measurements in tactical situations may be higher. If noise or other undesirable effects are produced as a result of these higher ground resistance differences, the earth electrode subsystems of each facility should be interconnected using two bare 1/0 AWG copper cables or chemical treatment for soil enhancement should be applied to the subsystem having the higher resistance.

1.11.2.2 Stand-Alone Equipment.

1.11.2.2.1 General Description. The stand-alone equipments of the military mobile system are generally self-contained transportable field equipment. These equipments interface with other equipment over WF-16 wire or coaxial cables. Stand-alone equipments generally are totally self-contained with integral power supplies and grounding system. The primary emphasis of low resistance grounds for stand-alone equipments is to assure personnel safety and lightning protection. Lightning protection is needed to protect operating personnel from the effects of lightning that may impinge upon interfacing cable or from direct strike on the shelter.

1.11.2.2.2 Grounding Procedure. Means of providing lightning and safety protection on stand-alone equipments include low resistance grounds and installation of surge arresters on interfacing cabling.

1.11.2.2.2.1 Low Resistance Grounds. Obtaining and maintaining low resistance grounds are the responsibility of user personnel. To provide adequate lightning protection the resistance to ground should be less than 10 ohms. Realizable grounding alternatives for stand-alone equipments are:

1.11.2.2.2.1.1 Existing Facilities. If available, operating personnel should connect an interconnecting ground cable to an existing low resistance facility as specified in 1.11.1.3.1.

1.11.2.2.2.1.2 Earth Electrode Subsystem, Single Ground Rod. A single driven ground rod connected to the equipment via an interconnecting cable may be used, if the design resistance value is achievable. The rod should generally be between 1.8 and 3.0 meters (6 and 10 feet) long. Selection of the required type of ground rod should be based upon the expected soil conditions at the tactical site location. The resistance between the rod and earth should be measured in accordance with Section 2.7.2 of Volume I. Where measured resistance is not low enough, a saline solution (see 1.11.1.3.4) should be added to the soil adjacent to the rod to reduce ground resistance.

1.11.2.2.2.1.3 Earth Electrode Subsystem, Multiple Ground Rods. Where soil resistance cannot be reduced by chemical means additional electrodes may be connected in parallel with the given ground rod. The interconnecting cable should be 1/0 AWG bare copper cable, and the ground rods should be spaced 1.5 to 2 rod-length's apart to minimize overlapping shells (see 1.11.1.1.1.5).

1.11.2.3 Stand-Alone Shelter.

1.11.2.3.1 General Description. A stand-alone shelter is comprised of equipment housed in a mobile metallic shelter and typically, is not situated close enough to other equipments to merit construction of a common extensive earth electrode subsystem between its interfacing systems. Power supplied to the shelter may come from a power generator or a commercial source. Interfacing with the shelter may be through the power cable. The need for grounding stand-alone shelters is to provide a ground for (a) the fault protection subsystem, (b) to "bleed off" static charges or EMI from interfacing signal cables, (c) the signal reference subsystem, and (d) the (signal reference subsystem), lightning protection subsystem.

1.11.2.3.2 Interconnection of Subsystems. The signal reference and fault protection subsystems are connected to the earth electrode subsystem because of the following reasons: (1) the skin of the shelter generally serves as the equipotential plane for the signal reference subsystem, (2) the electronic equipment systems are connected directly to the skin of the shelter by the shortest route possible, and (3) the fault protection subsystem is connected to the grounding bus in the power entrance panel, and in turn, to the earth electrode subsystem. Since the power entry panel is bonded to the skin of the shelter, no loops are formed, and everything within the shelter will remain at the same potential in the event of power faults, EMP, lightning or EMI. If the lightning activity in the deployment area warrants additional shelter protection, air terminals should be installed atop the shelter as per 1.11.1.1.3.1. If the installation is long-term, lightning protection shall be mandatory.

1.11.2.4 Collocated Military Mobile Equipments.

1.11.2.4.1 General Description. Collocated mobile equipments are equipments operating individually but housed together within a single transportable enclosure, e.g., tarpaulin. Typically, these equipments are not rack mounted and may be situated on the ground. Metallic shelter enclosures are not considered here (reference 1.11.2.5). Intra-enclosure communication links may exist among equipments, but normally links are established between an equipment and an external system. Basic operational characteristics of collocated equipments are similar to stand-alone equipments. Grounding requirements are primarily for personnel safety from lightning and power faults.

1.11.2.4.2 Grounding Procedure. Each stand-alone equipment is deployed with at least one ground rod. If the total number of equipments within the enclosure are small enough and can be positioned such that the ground rod for each can be used without compromising grounding integrity, then existing low resistance facilities or a single driven ground rod per equipment may be used (reference 1.11.2.2.2.1) to ground collocated equipments. Where large numbers of equipments are housed within an enclosure for which the individual grounding procedure is not reasonable, a simple earth electrode subsystem should be deployed around the enclosure. The size of the ground system and the number of attached rods needed to achieve the required ground resistance should be determined according to 1.11.1.3.3. In deployment areas requiring additional lightning\EMP protection measures described in 1.11.1.1.2 shall be incorporated.

1.11.2.5 Collocated Shelters.

1.11.2.5.1 General Description. Collocated shelters are transportable metallic shelters that share common signal and/ or power cables and arc classified in two general categories; those located within 8 meters (26.5 feet) of one another and those located greater than 8 meters (26.5 feet) from one another (see Figure 1-100). Collocated shelter configurations are typical of an equipment system that must be housed in multiple shelters. Grounding requirements for collocated shelters are required to provide personnel and equipment protection from the effects of lightning power faults and to provide a reference for signal grounds. Particular consideration must be given to collocated shelters receiving power from the same power source or communicating over inter-shelter signal cables. The need to establish an all encompassing shelter grounding system for collocated shelters situated more than eight meters apart should be a function of ground resistance measurements taken at each shelter site. The ground system of each shelter should be interconnected as shown in Figure 1-100 using two bare 1/0 AWG copper cables. If noise or other undesirable effects are produced as a result of these higher ground resistance differences, the system having the higher resistance can be reduced by use of chemical treatment or enhancement described in 1.11.1.3.4 or Section 2.9 of Volume I.

1.11.2.5.2 Grounding Procedure.

1.11.2.5.2.1 Power Ground. Shelters powered by a single, common power source should have all grounded conductors (neutrals) grounded to one point at the generator. Where several power generators are connected in parallel, the power neutrals of the generators should be interconnected and grounded at a single point. For collocated shelters not sharing a common source but supplied by individual power sources, all neutrals may be bonded together and grounded at one point. The equipment shelters should share a common earth electrode subsystem if they are located within 8 meters (26.5 feet) of each other.

1.11.2.5.2.2 Signal Ground. Collocated shelters less than 8 meters (26.5 feet) with interfacing communications cables should have the signal grounding conductors bonded to a common earth electrode subsystem (see 1.11.1.3.3). This provides all interfacing shelters with a common signal reference plane.

1.11.2.5.2.3 Fault Protection Subsystem. Intra-shelter green wire equipment grounding conductors should be grounded at the power entrance panel of each shelter via the earth electrode subsystem.

1.11.2.5.2.4 Lightning/EMP Protection. Electrical surge arresters should be used on all power and signal cables at the shelter points-of-entry to provide protection from lightning and EMP induced currents on inter-sllelter cabling. Lightning protection should also be provided in accordance with Section 1.3.

1.11.2.5.2.5 Collocated Shelters Greater than 8 Meters Apart. Collocated shelters located greater than 8 meters (26.5 feet) apart refers to equipment systems consisting of multiple shelters (which has interfacing shelters located as much as 250 feet apart) as opposed to an equipment system in which all elements are housed in a single shelter. These shelters may therefore also be considered as stand-alone shelters. Where deployment requires shelters to be located morc than 8 meters (26.5 feet) apart, grounding should be accomplished in accordance with Figure 1-100 and as follows:

1.11.2.5.2.5.1 Ground Resistance Difference of Less Than 150 Ohms. If ground resistance measurements of all shelters differ by less than 150 ohms, ground each shelter as a stand-alone shelter (reference 1.11.2.3).

1.11.2.5.2.5.2 Ground Resistance Difference of Greater Than 150 Ohms. If differences in ground resistance measurements are 150 ohms or more, take corrective action (reference 1.11.1.3) to reduce resistance, and ground each shelter as a stand-alone shelter (reference 1.11.2.3).

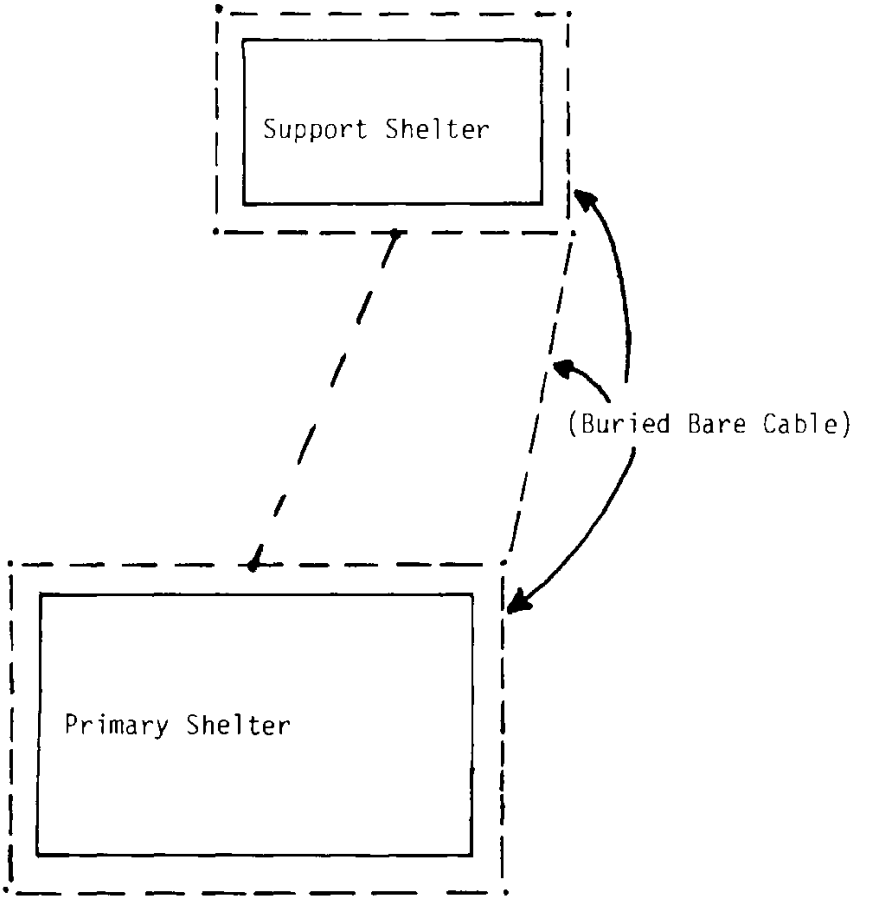

Figure 1-100. Connecting Ground Subsystems for Collocated Shelters Greater than 20 Feet Apart

1.11.2.5.2.5.3 Earth Electrode Subsystem. The earth electrode subsystem of each shelter shall be interconnected by two bare copper cables (see Figure 1-100). Tie all shelter earth electrode subsystems together to form a common earth electrode subsystem (reference Table 1-22 for appropriate size cable to be used).

1.11.2.5.2.5.3.1 Power Ground. All grounded (neutral) conductors of each shelter should be grounded to the earth electrode subsystem via the power entrance panel.

1.11.2.5.2.5.3.2 Signal Ground. The signal reference subsystem (skin or shelter) should be grounded at the earth electrode subsystem at a single point.

1.11.2.5.2.5.3.3 Safety/Equipment Ground (Green Wire). The equipment grounding conductors of each shelter are connected to the ground bus at the power entrance panel which in turn is grounded to the earth electrode subsystem.

1.11.2.5.2.5.3.4 Lightning/EMP Protection. Reference 1.11.2.5.2.4 for this requirement. If additional lightning protection is required, each air terminal with its associated down conductor should be grounded to a ground rod of the earth electrode subsystem. This requirement may necessitate the installation of additional ground rods.

1.11.2.6 Fixed Prefabricated Shelters.

1.11.2.6.1 General Description. Fixed prefabricated shelters are generally designed having the major components prefabricated and then assembled on-site into a fixed shelter which can be considered as a fixed facility. As such, it will have its own earth electrode subsystem (ring ground) meeting the requirements of Section 1.2. It should also have a lightning protection subsystem meeting the requirements of 1.11.1.1.3.1 whenever the shelter is located outside the cone of protection of a higher grounded tower. The shell of metallic prefabricated shelters should be constructed to be electrically continuous and grounded to the earth electrode subsystem to bleed off static charges and reduce the effects of interference to C–E equipments and circuits. If metallic and electrically continuous, the skin of a fixed prefabricated shelter may serve as the equipotential plane. If the skin is not metallic or electrically continuous, a separate equipotential plane meeting the requirements of Section 1.5 will be required.

1.11.2.6.2 Electrical Connection. If the skin of the shelter is metallic, and electrically continuous, it shall be bonded to the grounding (green) cable of the fault protection subsystem at the first service disconnect or the power entrance panel which, in turn, is grounded to the earth electrode subsystem by the shortest route. Both the grounded (neutral) and grounding (green) wires are bonded together inside the first service disconnect, and grounded to the earth electrode subsystem. The grounded wire may, however, be lifted from ground if hum or noise problems are encountered when one power source supplies power to two or more shelters.

1.12 FENCES.

1.12.1 Introduction. Perimeter or security fences designed as part of a facility's ground system shall be constructed of galvanized steel chain-link fencing; vinyl-coating shall not be used. The supporting post and top rails or wire shall be electrically conductive materials. A #6 AWG (minimum) copper conductor, called a reinforcing wire shall be woven through the entire length of the fence. Both the fence post and the fence reinforcing wire shall be grounded periodically to ground rods. A suitable interval for the ground rods is l00 feet for small sites and 500 feet for large sites. Installation will be shown on Figure 1-101.

1.12.2 Grounding. Fences should be grounded on each side of every gate and, where crossed by high tension lines, at points 150 feet on each side of high tension crossing. If a fence consists of wooden post and horizontal metal strands only, down conductors should be run the full height of the fence post and securely fastened to each wire so as to be electrically continuous. The connection to the ground may be made at the post, if the post is metal and is electrically continuous with the fence.

1.12.3 Installation. Installation of fence grounds shall be accomplished as follows:

a. Thread a bare conductor, #6 AWG or larger, through individual links of the fence. This must be accomplished by threading two or three links at a time and pulling the conductor through until all slack has been removed; then repeat the process. The copper wire shall be continuous between posts. Splices, if required, shall be made at fence post bonds.

b. Prepare bonding surface in accordance with Section 1.7.2.

c. Bond reinforcing wires at each post with exothermic welds or by brazing.

d. Bond ground straps to fence posts with exothermic welds or by brazing. Bonds to ground rods shall be exothermic welds or clamped and brazed.

e. Seal all bonding surfaces in accordance with Section 1.7.3.

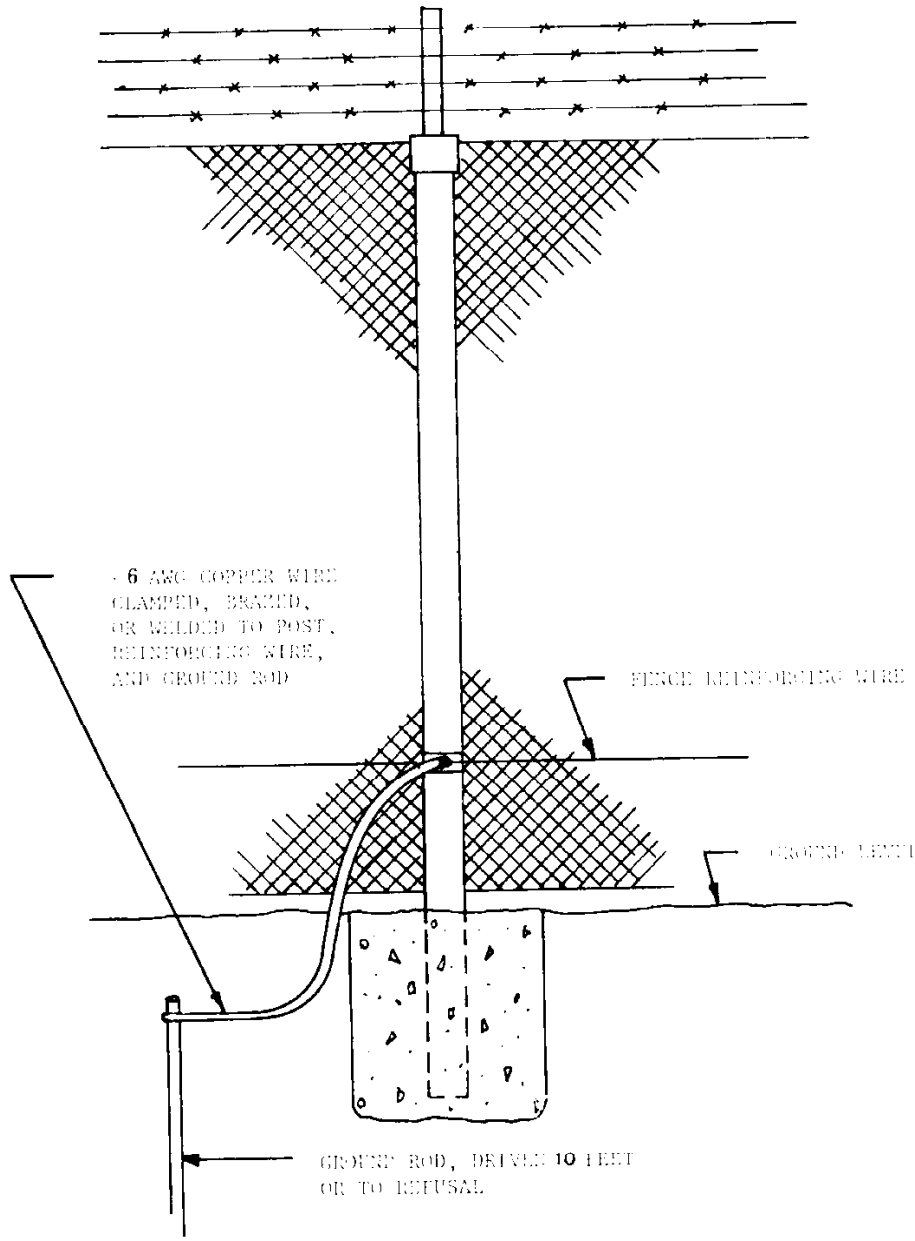

NOTE: GROUND ROD TO BE INSTALLED AT APPROXIMATELY 100-FOOT INTERVALS FOR SMALL SITES AND 500-FOOT INTERVALS FOR LARGE SITES.

Figure 1-101. Method of Grounding a Fence

1.13 INSPECTION AND TEST PROCEDURE FOR A NEW FACILITY. The grounding, bonding, and shielding practices and procedures recommended in this chapter should be implemented as integral elements of the facility during the construction of the building or structure. To ensure that the implementation is accomplished in a timely manner, the construction efforts should be carefully monitored from the onset of excavation through completion of the facility. Prior to acceptance of the facility, complete the Facility Checkout Form provided in Section 1.13.6. The following guidelines are provided to aid in the inspection and checkout of the facility.

1.13.1 Earth Electrode Subsystem.

a. Observe installation procedures. Specifically see that the recommendations of Section 1.2.4 are observed. Verify that ground rods conforming to the sizes specified in MIL-STD-188-124A are used. If the ground rods are driven in place, see that driving collars or nuts are used to prevent damage to the rods. Watch for bent and broken or bulged couplings between sections. Seriously weakened or damaged couplings should be replaced before driven below grade.

b. Spot check the resistance of rods as they are driven. Use the fall-of-potential method described in Section 2.2.2.2.1 to determine the resistance of a rod when it reaches the design or specified depth. With the aid of Figures 1-4, 1-5, and 1-6, project the net resistance of the total number of ground rods. This projection should indicate if the planned electrode subsystem will achieve 10 ohms (or less) resistance. As additional rods are driven, continue to spot check the resistance of individual rods by measuring the resistance at each successive fourth or fifth rod. This procedure will permit a decision to be made on the necessity for adjusting the electrode configuration (either adding to or subtracting from) to achieve the required resistance (see Section 1.2.2.3).

c. See that cable interconnecting the rods is of a correct size (1/0 AWG). Inspect all connections between cable sections and all interconnections between cable and ground rods. All connections to be buried and subsequently made inaccessible must be welded or brazed. Restrict the use of clamps or bolted connections to locations which will remain accessible.

d. Check to see that provisions are made for interconnecting the earth electrode subsystem with metal utility lines, buried tanks, and other underground metals.

e. Verify that risers or cables of appropriate size are installed for lightning down conductor, signal ground, and power system ground connections (see Section 1.3.2.2). Ensure that risers used for lightning down conductors are not used as part of the signal reference or fault protection subsystems.

f. Once the complete minimum system is installed, measure the resistance to earth for the system using the fall-of-potential method described in Section 2.2.2.2.1. If the resistance is greater than 10 ohms, alternate methods described in Section 2.9 of Volume I for reducing the resistance-to-earth shall be considered.

g. Insure that all changes or modifications are properly indicated on the facility drawings.

1.13.2 Lightning Protection Network.

a. Determine the cone of protection established by the air terminals (or by the mast or overhead ground wire, if a separately installed system is provided). Locate air terminals on a scaled drawing of the structure (be sure to include all views). Using the procedures of Section 1.3.2.1, determine if all parts of the facility are adequately included within the cones of protection established by the air terminals. In deficient areas, determine what additional measures, if any, need to be taken (Sections 1.3.2.1 and 1.3.2.2 should be consulted for guidance).

b. Inspect air terminals for type of materials (Section 1.3.2.1.1), for correct height (Section 1.3.2.1.2), and proper placement (Section 1.3.2.1).

c. Inspect roof conductors for proper size and correct choice of materials (Tables 1-2 and 1-3), proper routing (Section 1.3.2.2.1), and for proper use of fasteners (Section 1.3.2.3).

d. Inspect down conductors for proper size and appropriate choice of material (Tables 1-2 and 1-3). Verify that the routing of down conductors conforms to the recommendations of Section 1.3.2.2.2. Where structural steel members are used as down conductors, the recommendations of Section 1.3.2.2.2.1 should be observed. Inspect fasteners and hardware for accessibility, strength, and corrosion resistance as recommended by Sections 1.3.2.3 and 1.3.3.8.

e. Verify that adequate guards are provided (Section 1.3.3.10).

1.13.3 Signal Reference and Fault Protection Subsystems.

a. Inspect to verify that equipotential planes exist in conformance to Section 1.5.1.1.

b. In steel frame buildings, verify that the equipotential plane is bonded to the main structural steel elements. In wooden or masonry buildings inspect to assure that multiple downleads are bonded to the plane. Insure the red and black signal grounds are bonded to the equipotential plane as outlined in Section 1.6.

c. Verify that the structural steel elements are bonded at the joints to produce a low resistance (< 1 milliohm) joint. Review Section 1.5.1 for recommended fastening procedures. Welded joints conforming to Section 1.7.1 are preferred. Mechanically fastened joints should be carefully cleaned, bolts adequately torqued (see Table 1-5), and proper bond protection supplied. Visually inspect cleaning procedures, perform spot checks torque measurements, and visually verify that paints and sealants are applied as needed. Perform spot check measurements of bond resistance at structural joints using the double balanced bridge technique described in Section 2.2.2.3.1. Where bond resistances greater than 1 milliohm are encountered, require that bond surfaces be recleaned, bolts retorqued, or supplemental jumpers provided as needed to achieve 1 milliohm.

d. In non-steel frame or masonry buildings, inspect the installation of the supplemental grounding network for conformance to the recommendations of Section 1.5.1. In particular, verify that the grounding cables provide the required 2,000 circular roils per running foot of conductors.

e. Verify that the ground risers are bonded to the equipotential plane as specified in Section 1.5.1.1 and that the bond resistance does not exceed 1 milliohm. Inspect to assure that the ground risers are located to provide the shortest possible lengths to the equipotential plane.

f. Verify that at least two electrical paths exist between the equipotential plane and the earth electrode subsystem. Preferably the plane should be bonded to the building main structural steel (or downleads in wooden buildings) at least every 3 meters (10 feet). Measure the resistance between selected points on the plane and the earth electrode subsystem to verify that the total resistance does not exceed 5 milliohms. If the resistance does exceed 5 milliohms check all joints for proper bonding and down hauls for proper sizes. See that all deficient conductors are replaced and that all poor bonds are redone.

g. Inspect all conduit metallic pipes and tubes for continuity and bonding as recommended in Section 1.4.4.

h. Verify that all electrical supporting structures and cable ways are interconnected and bonded as recommended in Section 1.4.5.

i. Inspect the grounding of the electrical distribution system for conformance with Section 1.4.6.

1.13.4 Bonds and Bonding.

a. In addition to the inspection of structural joints, generally inspect all bonds for proper cleaning, correct fastening or assembly, and for adequate corrosion protection. Be particularly alert for conformance with the recommendations of Sections 1.7.1 and 1.7.3.

b. Perform resistance checks on selected bonds. Use the double balanced bridge method described in Section 2.2.2.3.1. All bonds should exhibit a resistance of 1 milliohm or less; those which do not must be redone.

PART I - EARTH ELECTRODE SUBSYSTEM

1.13.5 Facility Checkout Form.

Facility _____ Date _____

Location _____ Inspector _____

A. Soil Resistivity _____ (ohm-cm).

(Obtain from site survey (see Section 1.2.1.1) or from the measured resistance of a rod or group of rods (see Section 1.13.1). Use Figures 1-4, 1-5, and 1-6 to obtain an estimate of the average resistivity.)

B. Resistance of Completed Earth Electrode Subsystem: _____ ohms.

C. Sketch of Final Earth Electrode Subsystem:

(Show dimensions, locations of other buried metal objects, risers for lightning, power, or signal ground connections, and any ground wells.)

(Corrected engineering drawings may be attached in lieu of sketch.)

D. Inspection Check List (Initial when completed or confirmed):

Ground rod sizes as specified _____

1/0 AWG (or as specified) cable used _____

Risers placed as specified _____

All connections to buried metal objects made _____

All future inaccessible joints and connections welded or brazed _____

Ground wells provided as specified _____

PART II - LIGHTNING PROTECTION NETWORK

A. Cone of Protection:

(Attach profile views of facility (including antennas) with cone of protection added -see Section 1.3.2.1.2)

B. UL Master Label Obtained (If Required)?

Yes _____ Not Required _____

c . Drawings:

(Attach all drawings pertaining to the lightning protection system or indicate where they may be found.)

D. Inspection Checklist:

	As Specified	Comments
Air Terminals		
Materials	_____	_____
Height	_____	_____
Placement	_____	_____
Roof Conductors		
Size	_____	_____
Materials	_____	_____
Routing	_____	_____
Down Conductors		
Size	_____	_____
Materials	_____	_____
Routing	_____	_____

PART H - LIGHTNING PROTECTION NETWORK (Continued)

Fasteners & Hardware

Materials	_____	_____
Mounting	_____	_____
Guards	_____	_____

PART III - FACILITY GROUND SYSTEM

A. Steel Frame Buildings:

Inspect structural joints for correct bonding - see Part IV below.

B. Non-Steel Frame Buildings:

	As Specified	Comments
Supplemental Grounding Network:		
Cable Sizes	_____	_____
Facility Ground Plates:		
Size	_____	_____
Location	_____	_____

Resistance Measurements:

Number	_____
Lower Limit	_____
Upper Limit	_____

PART IV- BONDING

A. Procedures:

	As Specified	Comments
Cleaning	_____	_____
Fastening	_____	_____
Protection	_____	_____

B. Torque Tests:

Number Made _____

Check here _____ when all bonds meet the torque requirements of Table 1-23.

C. Resistance Tests:

Number Made _____

Lower Resistance Limit _____ milliohms

Upper Resistance Limit _____ milliohms

(Follow the procedures set forth in Section 1.13.3 for any bonds exhibiting a resistance greater than 1 milliohm.)

1.14 REFERENCES.

1-1. L. E. Whitehead, "Nomograph Determines Ground Rod Resistance," Electric Light and Power, December 1962.

1-2. C. H. Jensen, "Grounding for Substations," Electrical South, Ott/Nov 1960.

1-3. "Master Labeled Lightning Protection Systems," UL 96A, Underwriters Laboratories, lnc, Chicago IL, June 1963.

1-4. P. F. Offerman, "Lightning Protection of Structures," IEEE Conference Record of the 4th Annual Meeting of the Industrial and General Applications Group, Detroit MI, 12-16 October 1969, pp 365-370.

1-5. "The Protection of Structures Against Lightning," British Standard Code of Practice, CP 326:1965, British Standards Institution, British Standards House, 2 Park Street, London. Also available through American National Standards Institute (ANSI).

1-6. National Electrical Code, NFPA No. 70, 1987 (ANSI Cl), National Fire Protection Association, Batterymarch Park, Quincy MA 02269.

1-7. "Specification for the Design, Fabrication, and Erection of Structural Steel for Buildings, " American Institute of Steel Construction, NY, NY.

1-8. R. E. Taylor, "Radio Frequency Interference Handbook," NASA -S P-3067, National Aeronautics and Space Administration, Washington DC, 1971, N72-11153-156.

1-9. "Chemical Conversion Coatings on Aluminum and Aluminum Alloys," Military Specification MIL-C-5541B(2), 30 November 1972.

1-10. "Tin Plating, Electrodeposited on Hot-dipped, for Ferrous and Nonferrous Metals," Military Specification M1L-T-10727B, 2 April 1980.

1-11. "Cleaning Method and Pretreatment of Ferrous Surfaces for Organic Coatings," Federal Specification TT-C-490B, 21 July 1971.

1-12. S. Mir and D. R. J. White, "Building Attenuation and the Impact on Product Susceptibility," 1974 IEEE Electromagnetic Compatibility Symposium Record, 74CH0803-7 EMC, San Francisco CA, 16-18 July 1974, 76-84.

1-13. E. R. Uhlig, "Development of Criteria for Protection of NIKE-X Power Plant and Facilities Electrical Systems against Nuclear Electromagnetic Pulse Effects," Report No. 67U05, General Electric Company, Pittsfield MA, March 1967, AD 811 072L.

1-14. "EMP Protection for Emergency Operating Centers," TR-61A, Defense Civil Preparedness Agency, Washington, DC, July 1972.

1-15. H. Lamb, "On the Reflection and Transmission of Electrical Waves by a Metallic Grating," Proceedings of the London Mathematical Society, Vol 29, pp 523-544, 1898.

1-16. "Architectural Interference Data," RADC TR-63-312, Contract AF 30(602)-2691, White Electromagnetic, Inc, Bethesda MD, 20 August 1963.

1-17. R. B. Cowdell, "Simplified Shielding," 1967 IEEE EMC Symposium Record, Washington DC, pp 399-412.

1-18. A. P. Hale, "EM Shielding," 1973 IEEE EMC Symposium Record, New York NY, pp 330-339.

1-19. R. B. Shultz, "ELF and VLF Shielding Effectiveness of High Permeability Materials," IEEE Transactions on Electromagnetic Compatibility, Vol EMC-10, No. 1, March 1968, pp 95-100.

1-20. Not previously published. Data courtesy of Mr Dwayne Awerkamp, Motorola, Inc, Tempe AZ.

CHAPTER 2

EXISTING FACILITIES (Not Protected Against EMP)

2.1 INTRODUCTION. This chapter presents steps and procedures for verifying, upgrading, and evaluating the grounding, bonding, and shielding networks in an existing facility not protected against EMP. The specific items to consider during the evaluation of the facility are identified in Section 2.2 with a suggested survey form provided in Section 2.2.2.4. In addition, inspection procedures are given in Section 2.3. These procedures are directed toward verifying that the grounding, bonding, and shielding networks have not been compromised, that the basic resistance goals continue to be met, and that corrosion is effectively controlled.

2.2 UPGRADING.

For an existing facility with electrical wiring already installed, with an earth electrode subsystem (frequently only a connection to the water system) present, and (commonly) with electrical/electronic equipments in place, the installation of the grounding, bonding, and shielding networks described in Chapter 1 may not be straightforward. In recognition that major retrofitting, with the attendant costs and operational disruption, may be required in order for the facility to conform to the recoin mended practices and procedures, it is necessary that a comprehensive grounding, bonding, shielding, and lightning protection survey be made of the entire facility. The findings of the survey should be entered on the Survey Form. The results should be critically analyzed to determine the extent to which the existing system fails to conform to the recommendations set forth in Chapter 1. In areas of nonconformance, the performance history of equipments and subsystems in the facility should be examined to establish, if possible, any relationships which exist between noted deficiencies and operational problems. Then the decision to retrofit and the extent of any such retrofitting can be made based on the relative need to improve and on the overall cost of the retrofit. Figures 2-1 and 2-2 are typical for building expansion.

Before upgrading, altering, or expanding the grounding, bonding, or the shielding of a facility, it is necessary to define and analyze the existing system. This definition and analysis should include as a minimum the following steps:

a. Obtain or prepare an accurate and complete set of drawings to show what is initially in the facility.

b. Determine the condition, integrity, and effectiveness of the grounding, bonding, and shielding systems as they exist before changes are made. This determination will usually consist of a combination of visual inspections, analyses of facility drawings, and electrical measurements.

c. Comprehensively document the findings of steps a and b and maintain for future reference.

d. Compare the findings with the facility requirements to determine if improvements are needed.

Once the need for changes or improvements in the system is determined, take whatever action is needed to rectify the deficiencies noted during the survey.

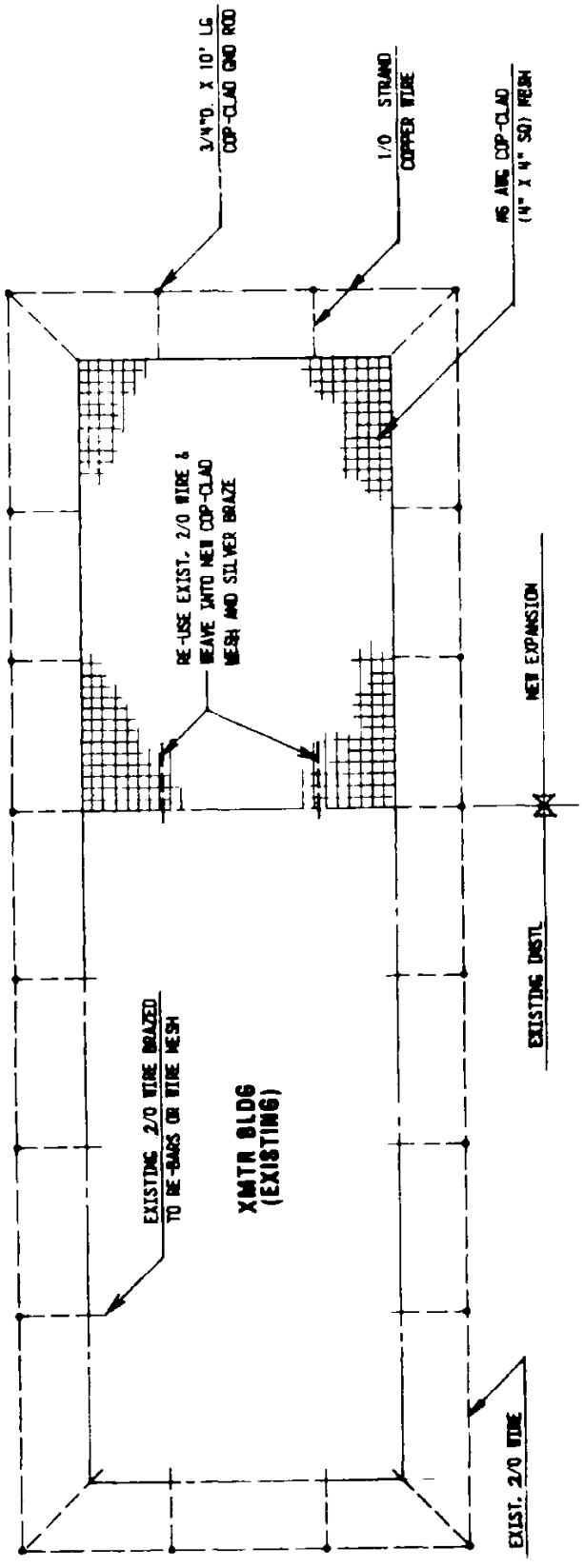

XMTR BLDG EXPANSION

Figure 2-1. Transmitter Building

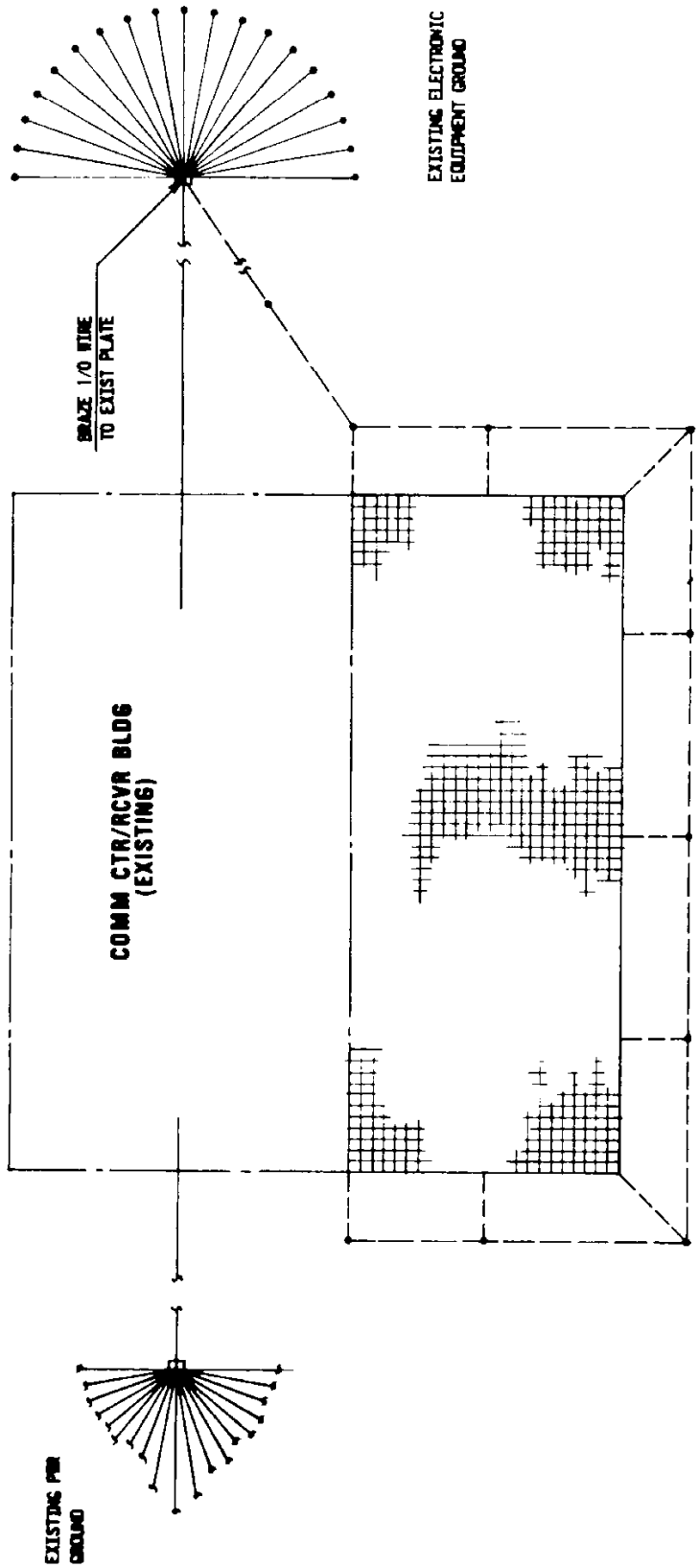

Figure 2-2. Communication Center/Receiver Building Expansion

2.2.1 Drawings. Obtain, prepare, or complete an accurate set of architectural and engineering drawings for the facility to include all structures associated with it. Of particular importance are the site layout drawings which show the configuration of the earth electrode subsystem, location of utility piping and cable systems, general landscape features and building profile drawings. Structural drawings show methods of connecting to the earth electrode subsystem, methods used for structural steel assembly, locations and methods for the installation of reinforcing steel as well as metal screens or sheets. Electrical diagrams and drawings generally show wire sizes, breaker sizes, as well as cable type, routing and enclosures utilized. Drawings of the lightning protection subsystem show heights and locations of air terminals, down conductor sizes and routing, fasteners, guards, and connections to the earth electrode subsystem. Once the drawings are obtained, compare them with the existing structure and update them as needed to reflect additions or modifications which have been made but not entered on the drawings. If new drawings must be prepared, be sure they include all elements of the structure. It is very important that an accurate representation of the existing configuration be on hand before attempting any decision pertaining to upgrading or retrofitting the facility.

2.2.2 Facility Survey. After the drawings are obtained or prepared, conduct a comprehensive survey of tile grounding, bonding, shielding, and lightning protection practices throughout the facility. This survey should cover all the major elements of the fault protection subsystem, signal reference subsystem, bonding (both in current paths and between structural elements), lightning protection for the structure, shielding for both EMI (and EMP, if required) and personnel protection. Visual observations should be concisely documented and related to the engineering drawings for the facility. Measurements performed along with results obtained should be accurately documented on the Grounding, Bonding, and Shielding Form of Section 2.2.2.4.

2.2.2.1 Survey Steps. The steps associated with the facility survey are:

a. Analyze the earth electrode subsystem and measure its resistance to earth.

b. Inspect a representative number (5 to 10 percent) of the bonds throughout the facility.

c. Inspect and evaluate the lightning protection subsystem.

d. Inspect the fault protection subsystem, make spot checks of stray current levels.

e. Wisp out and describe the signal grounding networks (or systems) present in the facility.

f. Perform a ground system noise survey.

g. Evaluate (if applicable) the electromagnetic shielding of (or in) the facility.

h. Before leaving the facility, review the Survey Form for accuracy and completeness.

2.2.2.2 Inspection Procedure.

The procedure outlined below follows the same order as the Survey Form. In some facilities, a different ordering of the steps may be appropriate; in large facilities, more than one of the areas may be examined simultaneously. The most important task is not the sequential ordering of the steps, it is rather the accurate and comprehensive conduct of the survey.

Before beginning the survey, enter the name and description of the facility (or the specific building, structure, or subsystem being surveyed), its location to include sufficient information to identify the geographical area, the date of the inspection, and the name of surveyor or survey team leader at the top of the Form.

2.2.2.2.1 Earth Electrode Subsystem.

a. Determine the configuration of the earth electrode subsystem for the facility. Sketch the conductor layout in the space provided in Part I, Section C of the Form or on an attached sheet. Engineering drawings may be attached in lieu of the sketch. Corrections or additions should be made to the drawings as appropriate. Identify the type of earth electrode subsystem present, i.e., rods, ring ground, grid, grid with rods, plates, horizontal radials, utility pipes, etc. Note all interconnections between the earth electrode subsystem and other conductors such as water pipes, buried tanks, structural columns, underground guard cables, antenna counterpoises, and power grounds.

b. To the extent that information is available, determine the composition (copper, copperclad steel, steel, solid, hollow, etc.), diameter, and length of ground rods, as well as the size, depth, and composition of the ring ground. If horizontal rods or ribbons are used, record the dimensions; likewise, record the physical dimensions and composition of plates, cylinders, or other types of electrodes.

c. Examine the conductor or conductors used to ground the power system neutral in the first service disconnecting means (i.e., main power switch or breaker for the facility), the power transformers, or other elements of the power distribution system to the earth electrode subsystem. Record the size or sizes in Section B, Part I, of the Form. Using a clamp-on ammeter, measure the ac current in each of these conductors and record in Part IV, Section C.

d. Inspect those bonds associated with the earth electrode subsystem carefully for evidence of looseness, corrosion, electrolysis, and lightning or mechanical damage. (For a more detailed discussion of bond Inspection procedures, see Section 2.2.2.2.2.) Note specific deficiencies in the appropriate blanks in Part II of the Form.

e. Make a general classification of the type of soil at the site. If the site possesses unique properties (es., located on a mountain top. in a swamp, on a coral reef), appropriately indicate the unusual features. Also generally describe the weather conditions existing at the time of the survey, particularly if the earth resistance measurement described in the next step is performed. If known, indicate how recently rainfall totaling at least 0.01 inch has occurred. Enter the site and weather description in Sections D and F of Part I. Also state if any soil treatment or enhancement procedures have been utilized.

f. Measure the resistance to earth of the earth electrode subsystem using the fall-of-potential method. (For a detailed description of the principles of this technique see Volume 1, Section 2.7.2.)

(1) Connect the terminals marked C_1 and P_1 of the test set together and connect them to the electrode under test.

(2) Determine the maximum dimension of the earth electrode subsystem. For a circle, this dimension is the diameter; for a square or rectangle, the dimension is along the corner-to-corner diagonal; for other shapes, select the longest lateral distance across the system. Locate the current probe, C_2, of the earth tester, at a distance equal to or greater than five times the longest dimension from the point of connection to the electrode under test. Earth testers are typically supplied with approximately 30 meters (100 feet) of interconnecting wire. For all but the simplest earth electrode subsystem, 30 meters (100 feet) is insufficient spacing of probe C_2. The 30-meter (100-foot) spacing may be used for one- or two-rod systems where the rods are not more than 6 meters (20 feet) long nor spaced more than 6 meters (20 feet) apart. Thus, in most cases, additional wire will be needed for connecting the test instrument to the C_2 probe and the the potential probe, P_2. For distances up to 300 meters (1000 feet), insulated No. 16 AWG or No. 18 AWG wire may be used.

(3) Position the C_2 probe along a line which maximizes the distance from the electrode under test and from other buried metals such a utility pipes, power and signal cables, fuel tanks, sewers, etc. In choosing the direction for placement of the C_2 probe, examine the configuration of the earth electrode subsystem for the facility and determine the location of all such buried metals. Then locate the probe as far as possible from all these metals as illustrated in Figure 2-3.

(4) Next position the potential probe P_2 along a straight line between the C_2 probe and the point of connection to the electrode under test. insert both P_2 and C_2 probes into the soil to a depth of between 10 cm (4 inches) and 30 cm (12 inches). (In the event that the probes supplied with the tester by the manufacturer are not available, make a set of probes following the instructions given in Chapter t, Section 1.2.1 .1.) Take the first resistance reading, following the instructions supplied with the tester, with probe P_2 located about 20 percent of the distance X between the electrode and C_2. Repeat the measurement at the 0.4, 0.5, 0.6, 0.7, 0.8, and 0.9X points. Record the C_2 distance and the resistance measured at each P_2 location on the worksheet shown in Figure 2-4. (Figure 2-.5 is an example of a typical worksheet that has been completed.)

(5) The resistance of 0.5X and 0.7X should be within 10 percent of the value at 0.6X. If these readings do not fall within 10 percent of the reading at 0.6X, either measure along a line in a different direction or move the position of C_2 farther away from the electrode under test, If locating C_2 equal to greater than five times the largest dimension is impractical, perform a series of tests for at least five C_2 locations out to the maximum practical distance. The resistance of the subsystem must then be determined graphically, using the method for extensive electrode subsystems described in Volume I, Section 2.7.2.2. (An illustrative example is also shown in that section.)

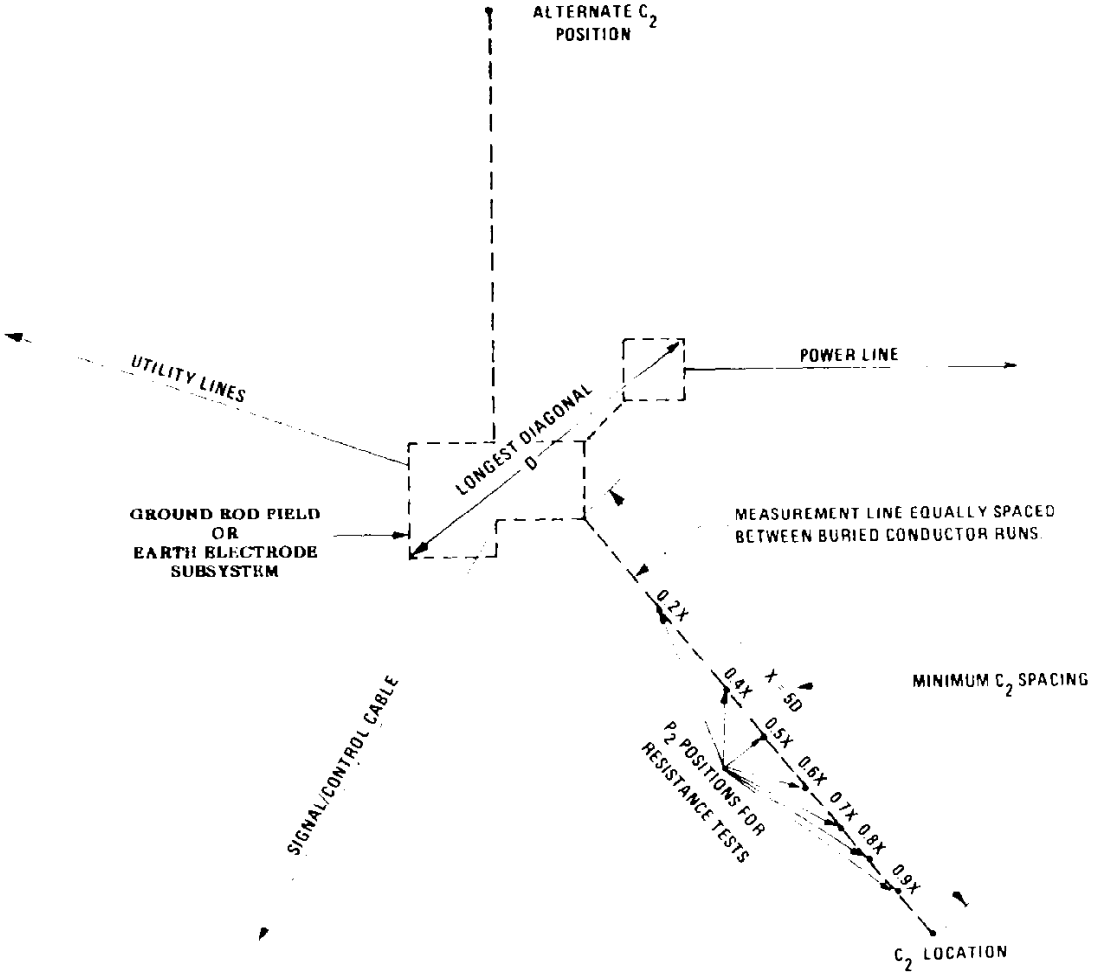

Figure 2-3. Earth Resistance Measurement at a Typical Facility

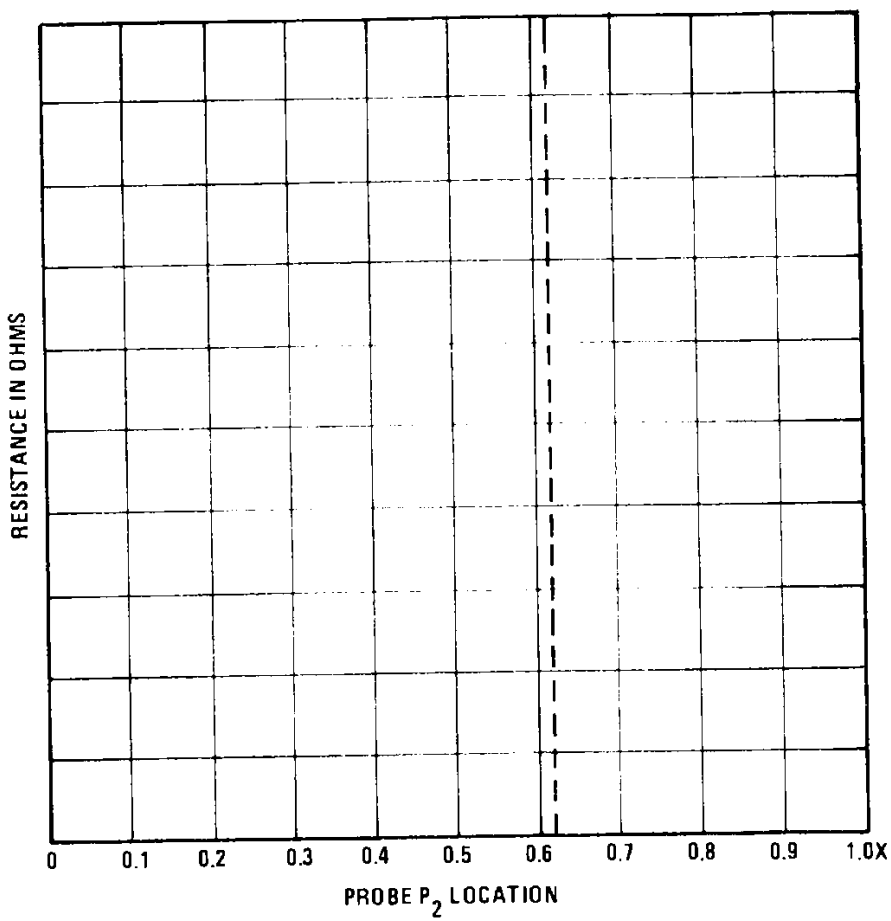

EARTH RESISTANCE

LOCATION _____

$C_1 P_1 - C_2$ DISTANCE, X _____ (FT)

POSITION	DISTANCE IN FT	RESISTANCE IN OHMS
0.2X		
0.4X		
0.5X		
0.6X		
0.7X		
0.8X		
0.9X		

RESISTANCE AT 0.62X _____ (Ω)

Figure 2-4. Resistance Measurement Work Sheet

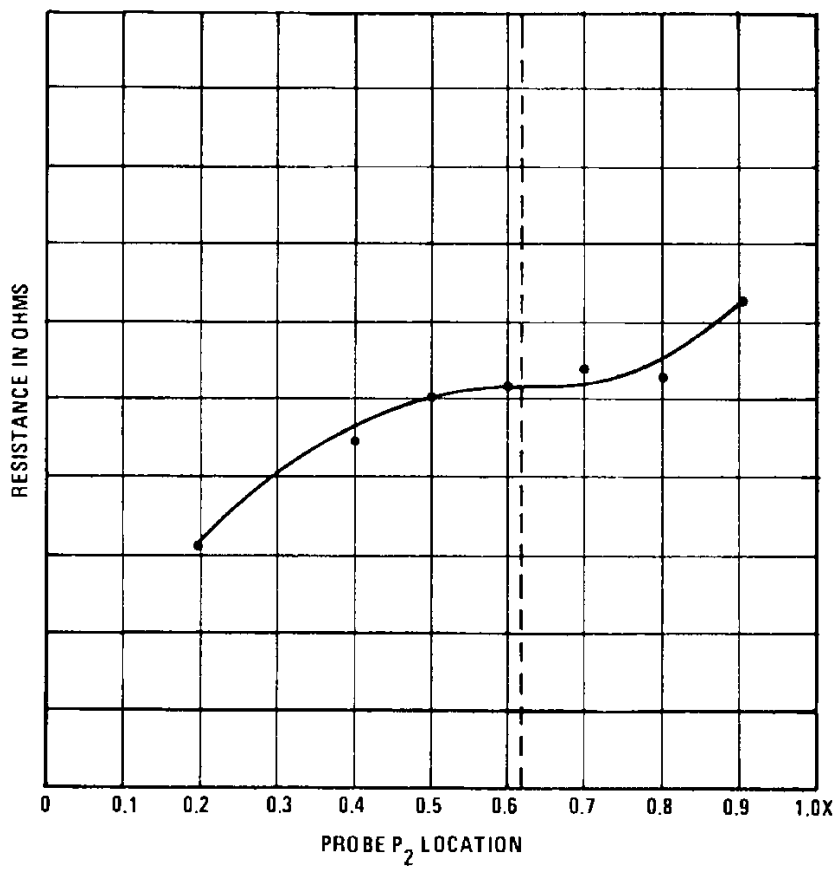

EARTH RESISTANCE

LOCATION *Transformer No. 1*

$C_1P_1 - C_2$ DISTANCE, X *130* (FT)

POSITION	DISTANCE IN FT	RESISTANCE IN OHMS
0.2X	26	3.2
0.4X	52	4.5
0.5X	65	5.1
0.6X	78	5.2
0.7X	91	5.4
0.8X	104	5.3
0.9X	117	6.3

RESISTANCE AT 0.62X *5.3* (Ω)

Figure 2-5. Sample of a Completed Resistance Measurement Work Sheet

2.2.2.2.2 Bonds and Bonding.

a. Visually check a representative number (5 to 10 percent) of the various types of bonds in use throughout the facility. An examination of one bond is not sufficient; it will not normally be necessary, however, to examine every joint in the facility. Typical bond deficiencies to look for are illustrated in Figures 2-6 and 2-7. Other things to look for are:

(1) Welded, brazed, or silver soldered connections should be examined for broken or cracked seams, presence of voids, size of filler deposit (see Section 1.8.1), length and number of deposits (if discontinuous), and evidence of corrosion.

(2) Soft soldered bonds should be inspected for broken connections, evidence of cold solder joints (crystalline, grainy appearance), and signs of overheating. Soft solder should only be used to improve conductivity at load bearing joints; it should not be required to provide mechanical restraint. There shall be no solder joints in either the fault protection subsystem (this includes the green wire network) or in the lightning protection subsystem.

(3) Bolted joints should be checked for looseness, inadequately sized fasteners, corrosion of either the fastener or main member, improper use of washers and locknuts, absence of or inadequate coverage with protective coatings, damaged or missing hardware, and improperly cleaned mating surfaces. Be particularly thorough in the inspection of bolted connections in areas open or exposed to the weather.

(4) Joints using rivets, clamps, and other type fasteners should generally be examined for looseness and corrosion.

b. Note the location and nature of specific bond deficiencies in Section B, Part II, of the Survey Form.

c. Concurrently with or following the visual inspection of the bonds, perform bond resistance measurements using the test procedure described in Section 2.2.2.3.1. Select five to ten bonds that visually appear tight, well made, and corrosion free and measure their resistances. The sampling should include structural bonds, equipment-to–structure bonds, connections between safety ground wires, conduit-to-conduit or conduit-to-cabinet joints, bonds in lightning down conductors (to include structural columns if used for lightning discharge paths), and others as appropriate. Also measure all bonds exhibiting visible defects. These measurements indicate the actual resistance between the two measurement points and also include the effects of any paths in parallel with the bond under test.

d. For every bond exhibiting a resistance greater than one milliohm, check for looseness; if the connection is loose, tlghten the fastener. Measure the resistance again after tightening. If the resistance is still greater than one milliohm and the joint can be readily disassembled, disassemble the joint and check for corrosion, debris, paint, or other nonconductive materials. Remove the material, reassemble the bond, and remeasure the resistance. If the resistance is still greater than one milliohm, note on the Survey Form the location of the bond and indicate the type of corrective action needed.

e. Bonding jumpers using wires, cables, or wide metal straps are frequently used for fault grounding, signal grounding, and lightning grounding. Fault protection jumpers should conform to Article 250 of the NEC. If they do not conform to Article 250, the jumpers should be replaced with cables or straps of the sizes specified by the NEC. Signal grounding straps should be only as long as needed to bridge the physical distance and should exhibit a length to width ratio of not greater than 5 to 1. Lightning bonds should be restricted to not more than 1.8 meters (6 feet) and should only be used to interconnect lightning down conductors to nearby

metallic objects. In addition to these requirements, examine the end connections at the end of the straps or jumpers for looseness, corrosion, and mechanical damage as described above. Any bond jumper not conforming to these requirements should be documented in Section D, Part II, of the Survey Form. Note the specific location and indicate the type of corrective action needed.

Figure 2-6. Typical Bonding Deficiencies

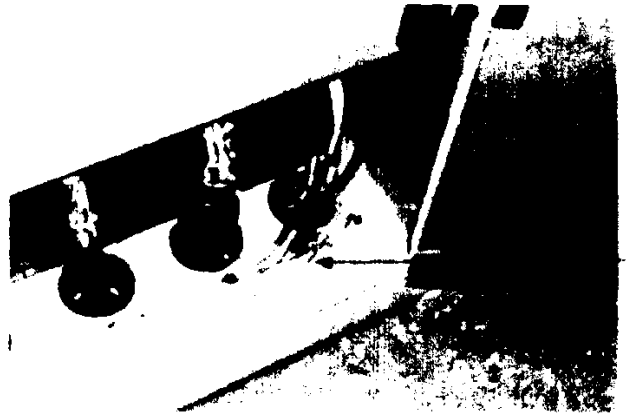

EXCESSIVELY LONG SHIELD PIGTAILS

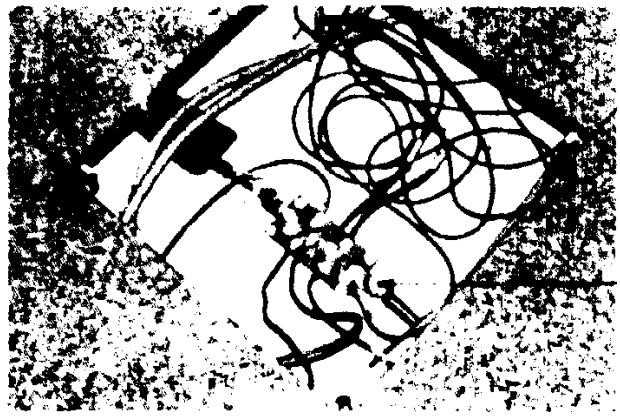

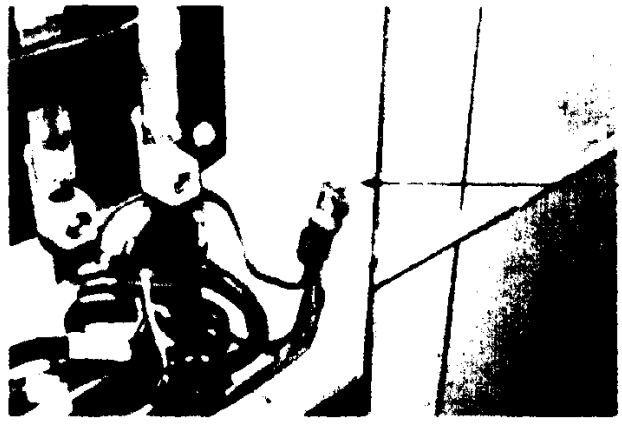

Figure 2-7. Typical Bonding Deficiencies

2.2.2.2.3 Lightning Protection Network.

a. First, make a sketch of the lightning protection network for the facility or compare the system as installed with the engineering drawings.

(1) The sketch should include profile views of the facility's exterior either drawn approximately to scale or dimensions indicated on the views to permit scaled drawings to be made later. On the sketch, indicate the location of air terminals (lightning rods), the routing of roof and down conductors, connections to the earth electrode subsystem, and the location and size of bonding jumpers. Are the air terminals located and installed in such a manner so as to provide adequate protection (1:1 cone of protection) for all C-E buildings, structures, antennas, and equipments?

(2) In most cases, engineering drawings should be available. If not shown already, add elements of the lightning protection subsystem to the drawings.

b. Some large existing facilities may have a UL Master Labeled System installed. If such a system exists, indicate this fact in Section B, Part III of the Form.

c. In Section C, Part III, of the Form, record the height (above the roof) and material of the air terminals. Look for evidence of burning, pitting, or melting of a degree that seriously weakens (physically) the air terminals. While inspecting the air terminals, be alert for other metallic extensions (railings, antenna masts, etc.) extending above the air terminals or outside the cone of protection and note the existence of any such extensions on the Form.

d. Record the cable sizes and materials used for roof and down conductors. Examine both types of conductors for unnecessary length, sharp or unnecessary turns (radii less than 20 cm (8 inches)), corrosion, and mechanical damage.

e. Check fasteners and mounting hardware for secure mounting, looseness, corrosion, and mechanical damage. Verify that fasteners for connecting dissimilar metals (e.g., copper to aluminum) are of UL-approved bimetallic construction. Record any noted deficiencies in Section F, Part III, of the Form.

f. Be sure that the bonds and bonding inspection (Section 2.2.2.2.2) includes the lightning protection subsystem.

g. Insure that interconnections between the lightning protection subsystem and the earth electrode subsystem, structural metals, utility lines, etc., are recorded or noted on the sketch prepared earlier or are shown on the facility drawings.

h. Check for the adequacy of guards which provide mechanical protection for down conductors (see Figure 2-8). Note any down conductors in areas with public access or subject to contact by equipment or machinery. All such down conductors must be guarded with metallic or nonmetallic (preferably) guards to a height of at least 2.7 meters (9 feet) from grade or floor level. Such guards must be securely fastened in place and not show appreciable physical degradation. Metal guards to include EMT and conduit must be bonded to the down conductor at the top and bottom. Record all noted deficiencies in Section H, Part III.

Figure 2-8. Severely Damaged Down Conductor

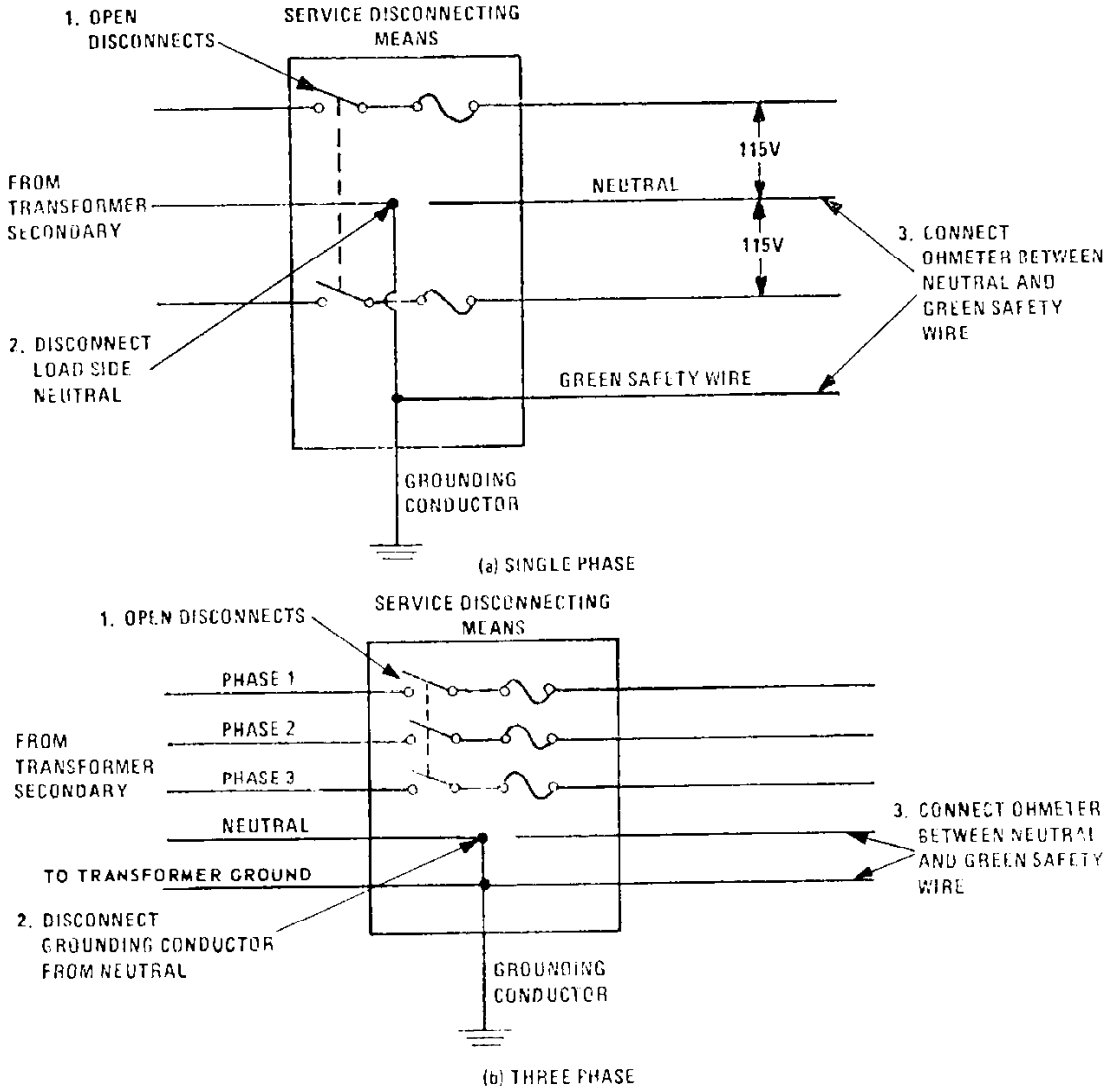

Figure 2-9. Method for Determining the Existence of Improper Neutral Ground Connections

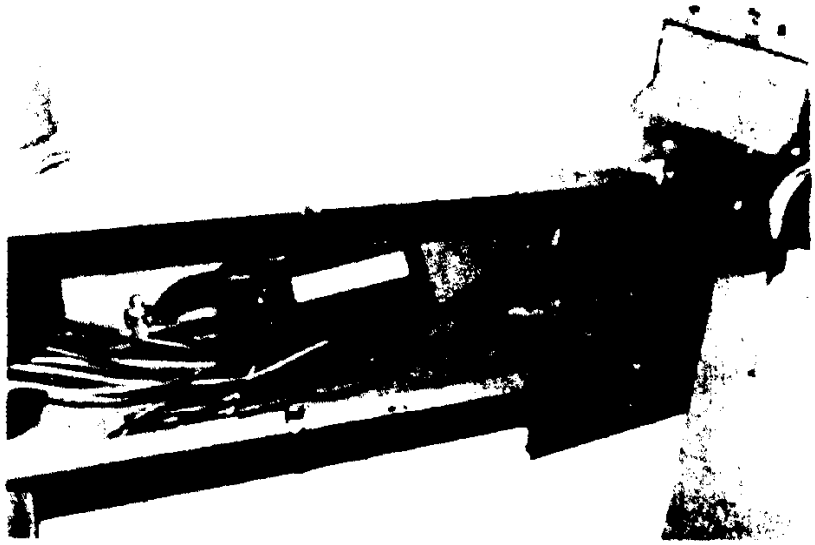

Figure 2-10. Measurement of Stray Current Level in Safety Ground Conductor

2.2.2.2.4 Safety Grounding.

a. Inspect the fault protection subsystem for conformance with the requirements of MIL-STD-188-124A and the National Electrical Code. Specifically, all equipments supplied with electric power and other electrical apparatus falling within the jurisdiction of the Standard or the NEC, must be grounded in accordance with the Standard or the Code. Inspect the facility and the equipment associated with the facility to see that grounding (green) conductors are present and record the sizes of the conductors. See that all connections are tight and well made. Record the other information requested about the fault protection subsystem in Part IV of the Survey Form.

b. Check to see that color continuity is maintained from the breaker panels to the equipment. In particular, be alert for white wire/green wire reversals.

c. Make sure that the neutral white wire (or other designated conductor) is not grounded at intermediate distribution panels, at switch boxes, or inside equipments. The grounded conductor shall be bonded to the earth electrode subsystem only at the first service disconnecting means. Facilities which can be temporarily removed from service should be deenergized and the main power switch locked or otherwise secured open. With electrical power removed, disconnect the neutral from ground at the first service disconnecting means and check for continuity between the neutral and the grounding conductor (see Figure 2-9). A low resistance reading (<10 ohms) indicates that the neutral is connected to ground somewhere other than at the first service disconnect. This gound connection must be located and removed. Under normal operation, a one megohm resistance should easily be attained.

d. Using a clamp-on ammeter measure the stray current levels (see Figure 2-10) in the safety ground network at selected points throughout the facility. Choose a sufficient number of points to give an indication of the relative stray current level in the facility. In facilities containing electronic equipments, record and take action to correct all levels greater than 0.1 ampere. Enter results of measurements in Section C, Part IV, and see Section 2.2.3, which follows, for suggested steps for reducing these stray current levels.

2.2.2.2.5 Signal Grounding Practices.

a. Prepare a general description of the methods, techniques, and practices of signal grounding in the facility (see Sections 1.5 and 5.3.2 of Vol I). Determine if an identifiable, dedicated signal grounding network is present. Note the equipments served by the network. Include the description of this network in Section A, Part V of the Form. In Section B, record the location and size of wires or buses used as signal conductors. Also determine the existence of an equipotential plane.

b. Using a double balanced bridge or a four-terminal milliohmmeter, measure the resistance (see Section 2.2.2.3,1) between selected points of the signal ground network. Where lower frequency ground networks exist, measure the resistance between those points on the network where equipment interconnections are made. On Figure 2-11, typical examples of this measurement are between equipments D and E, between E and G, and between G and K. This resistance should not exceed 20 milliohms. Further, measure the resistance between the ground terminals of equipments that are also interconnected with signal cables and control lines. On systems employing equipment chassis or cabinet as signal ground (e.g., most higher frequency and rf systems), measure the cabinet-to-cabinet (or chassis-to-chassis) cables (see Connections B-F and F-H on Figure 2-11). Also measure the cabinet-to-structure resistance (see Connections B-C and K-J). These two resistances should be less than five milliohms. Record the test point locations and measured resistances in Section C, Part V, of the Survey Form.

2.2.2.2.6 Ground System Noise Survey. Stray currents on the fault protection subsystem, signal reference subsystem, and cable shields are frequent causes of common-rnode noise interference in facilities. The assessment of these currents is a vital part of the survey of electronic facilities. Measure both stray power currents and other non-power related currents as follows:

a. Using a clamp-on ammeter, check the ac load currents on the conductors of three phase supply lines. Note particularly any differences in line currents greater than 10 percent. Also check and record ac currents on neutrals.

b, Using the clamp-on ammeter, probe signal ground wires, signal reference subsystems, cable shields, or other conductors likely to be carrying stray power currents. Note particularly the current levels in the grounds of lower frequency equipments and in the shields of cables carrying video, data, or other types of signals with operating frequencies in the power frequency range. Typical locations in the illustration of Figure 2-11 where stray current measurements should be made are on the connection B-C between the rack of higher frequency equipment and the structure, on connection A-F between the equipment bay and the power panel, on the cabinet ground connection between lower frequency equipments E and G, and on connection J-K.

c. Record the results of the current measurements in Part VI of the Survey Form.

S : STRUCTURAL STEEL ELEMENTS
LF: LOWER FREQUENCY
HF: HIGHER FREQUENCY
PP: POWER PANEL

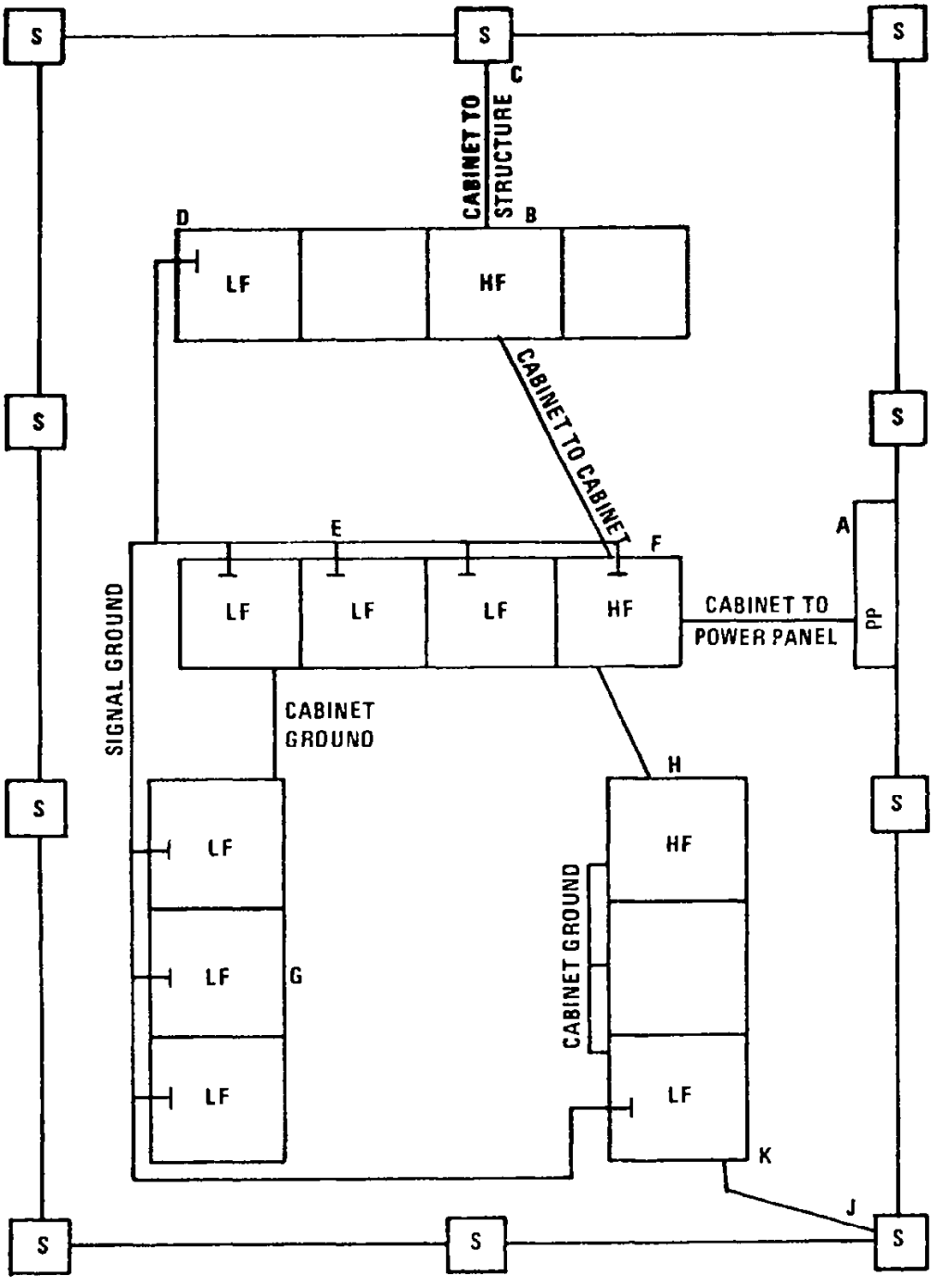

Figure 2-11. Typical Bond Resistance and Stray Current Measurement Locations in an Electronic Facility

d. Using the test procedure described in Section 2.2.3.2 measure the stray current levels on a selected number of shields surrounding sensitive signal cables, on conduit, on the signal reference subsystem, and on equipment ground cables. Document the test details (i.e., vertical sensitivity and sweep rate) on the photographs made of the oscilloscope displays and attach the photographs to the Survey Form.

e. Using the test procedure described in Section 2.2.3.3 perform differential noise measurements between interfaced equipments: between the lower frequency (or other) signal ground network and structural ground; between widely separated points on ground networks; between signal grounds in equipments and the point of connection to the earth electrode subsystem; and between any other two points where common-mode voltages are causing system or equipment noise problems.

f. Determine the type of grounding required, i.e., single-point or equipotential ground plane.

2.2.2.2.7 Shielding.

a. Identify the presence and nature (or type) of shields at the facility. (Recognize that shielding may be incidentally provided by a wall, screen, or other type of barrier that is primarily intended for a different purpose.) Describe the shields in Section A, Part VII of the Form.

b. Inspect screens, shielded cabinets, doors, covers, etc., of all designated rf barriers for wear, damage, corrosion, broken bond straps, broken or damaged bonds, and loose gaskets. Observe equipment operation for evidence of interference, noise, or malfunctions. Record deficiencies in Section B of Part VII. Ensure that grounding conductors passing through a designated rf barrier are bonded to that barrier.

c. Be sure that the bonds and bonding inspection (Section 2.2.2.2.2) includes the shields.

d. Examine cables and connectors for broken or frayed shields, improper mounting, and evidence of corrosion. Check to see if the termination of cable shields is in accordance with Sections 3.2.1.1.7 and 3.2.1.2.l. Note deficiencies in Section C of Part VII.

2.2.2.3 Test procedures.

2.2.2.3.1 Bond Resistance. This test is intended to give a general indication of bond adequacy, based on the dc resistance of the bond.

a. Equipment Requirements. The equipment required for this test is as follows:

(1) A dc resistance bridge capable of measuring to about 0.001 ohm or better. The bridge should be portable and not be position-sensitive. Connection of the test sample to the bridge terminals should be easily performed without cumbersome adapters or special tools. An instrument with separate potential (voltage) and current terminals is preferred to a two-terminal device.

(2) A pair of heavy-duty spring clip leads for connection between the bridge and the bonded junction. Clip leads may be connected to braided straps and plugs to make connection to the bridge. Total resistance of external connectors and leads should not be greater than 0.001 ohm.

b. Equipment Setup.

(1) Using the heavy-duty spring clips and braids or low resistance wire, connect the leads to the bridge.

(2) Place the bridge in operation according to the manufacturer's operating manual.

(3) Zero the bridge, including leads, and connect the clip-leads across the bonded junction as shown in Figure 2-12. By placing the current leads away from the junction while placing the potential leads near the junction, the effects of the probe contact resistance are minimized. however, if the bond to be measured is internal to a metallic grid such that other current path exist between the current probes in parallel to the one through the bond under test, the potential and current probes should be connected near to the same point (one potential probe and one current probe on each side of the bond). Otherwise, a gross error may result. When multiple parallel paths exist, this procedure may not adequately indicate the true condition of the specific junction under interest, but it will indicate the total resistance between both sides of the junction.

c. Test Procedure.

(1) Adjust the bridge balance until a null is obtained.

(2) Record the indicated resistance.

2.2.2.3.2 Ground System Noise Current. This test procedure measures the stray currents on fault protection subsystem, signal grounds, and cable shields which are frequent causes of common-mode noise interference within a facility.

a. Equipment Required.

(1) Oscilloscope (battery operated, if available).

(2) Oscilloscope current probe.

(3) Oscilloscope camera.

b. Equipment Setup and Test Procedure.

(1) Connect the current probe, current probe amplifier, and oscilloscope as shown in Figure 2-13.

(2) Observe the oscilloscope-displayed ambient level at each test point.

(3) Photograph the ambient level at each test point.

(4) Set the oscilloscope to trigger at a level slightly above the ambient.

(5) Set the oscilloscope for single sweep operation and open the camera shutter.

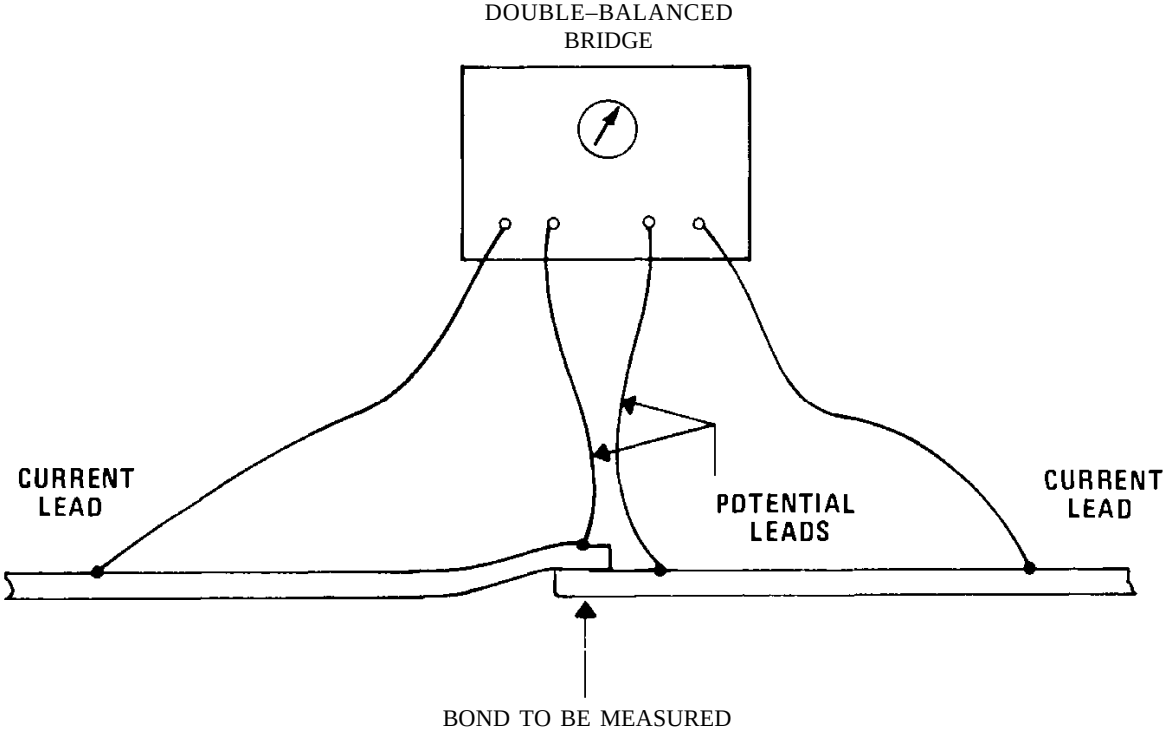

Figure 2-12. Bond Resistance Measurement Technique

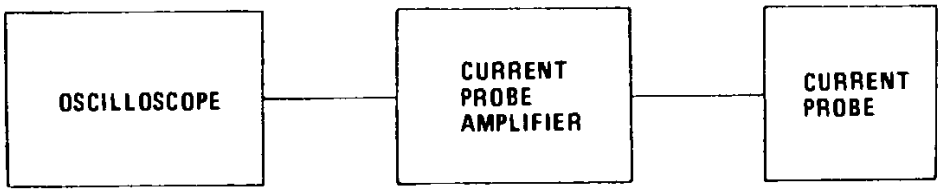

Figure 2-13. Test Setup for Stray Current Measurements

(6) Let the camera shutter remain open for five minutes or until the oscilloscope is triggered, whichever occurs first. (Longer sampling periods may be used if desired.)

(7) Record pertinent information on the test photograph.

(8) If a spectrum analyzer plug-in is available for the oscilloscope, perform the current measurements in the frequency domain as well as the time domain. (Frequency domain measurements can be of great assistance in identifying the source of interference currents.)

2.2.2.3.3 Differential Noise Voltage.

a. Equipment Required.

(1) Oscilloscope with time and frequency domain plug-ins.

(2) Oscilloscope camera.

(3) Isolation transformer.

(4) Required lengths of shielded cable.

b. Equipment Setup and Test Procedure.

(1) Set up the equipment as shown in Figure 2-14. Note that the signal probe and the "ground" reference probe are connected to each of the two points between which the voltage differential is desired.

(2) After an adequate warm-up time, photograph the ambient noise level in both time and frequency domains.

(3) If transient data is required, proceed as indicated in steps four through seven in Section 2.2.2.3.2, above.

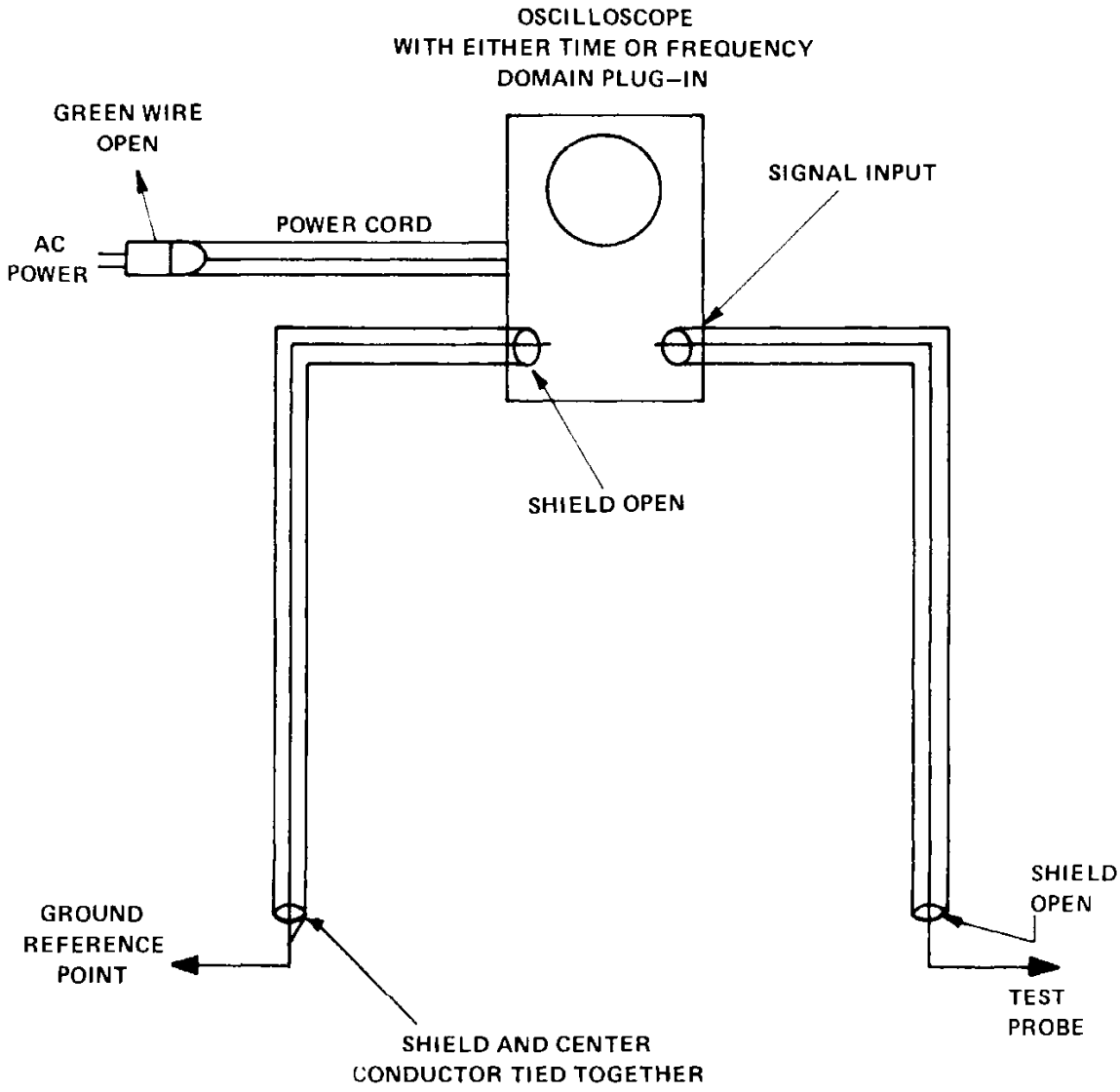

Figure 2-14. Oscilloscope Connections for Measuring Voltage Levels on Ground Systems

2.2.2.4 Survey Form.

FACILITY

GROUNDING, BONDING, AND SHIELDING

Facility _____ Date _____

Location _____ Inspector _____

PART I - EARTH ELECTRODE SUBSYSTEM

A. Configuration (Sketch or attach drawing):

B. Identify:

Rod Size and Length _____ Grounding Conductor Size and Length _____

Rod Composition _____ Grounding Conductor Composition _____

Interconnecting Cable Size _____ Ground Wells (Yes/No) _____

Interconnecting Cable Depth _____ Ground Wells (Size/Type) _____

C. Bonds:

General Condition: Excellent _____ Good _____ Poor _____

Unacceptable _____

Specific deficiencies _____

(See also Part II, Bonds)

D. Soil Conditions:

Type Soil: Loam or Humus _____ Clay _____ Sand _____
Gravel _____ Rock _____
General Moisture: Dry _____ Damp _____ Wet _____
Other Comments: _____

_____

_____

_____

E. Resistance Measurement:

Sketch of Test Setup (Indicate probe locations, spacings, etc.):

F. Weather (at time of resistance measurement):

Wet _____ Dry _____ Temperature _____
Snow _____ Rain _____ Mist _____
Days since last rainfall (or snow): Same day _____ 1-5 Days _____
5-19 days _____ more than 20 days _____

PART II - BONDS

A. General Overall Condition (check):

Excellent _____ Good _____ Poor _____ Unacceptable _____

B. Specific Deficiencies:

Location of Bond	Nature of Defect

(Use additional sheets if necessary)

C. Resistance (Use double-balanced dc bridge or approved bond resistance meter and identify those bonds whose resistance exceeds one milliohm):

Location of Bond	Nature of Defect

(See text for selection of bonds to measure)

D. Bond Jumpers (Specific observations or deficiencies):

Location	Material	Length	Wire/Strap Size

(Use additional sheets if necessary)

PART III - LIGHTNING PROTECTION SUBSYSTEM

A. Layout (Sketch or attach engineering drawings):

B. UL Master Label Approved: Yes _____ No _____

C. Air Terminals (Lightning Rods):

Height _____ Location _____

Is height sufficient to protect facility and/or antennas? (1:1 cone of protection)
Yes No

Material _____

Evidence of burning, pitting, or melting? (Identify location and specific evidence)

Evidence	Location
_____	_____
_____	_____
_____	_____
_____	_____
_____	_____
_____	_____

D. Roof Conductors:

Cable Size _____

BEND RADIUS: (8 inches)
> _____ < _____

Cable Material _____

BEND ANGLE (90 degrees)
> _____ < _____

Specific Deficiencies:

Location	Deficiency
_____	_____
_____	_____
_____	_____
_____	_____

E. Down Conductors:

Structure _____ or Separate Conductors _____

Conductor Size _____

Conductor Composition _____

Bend Radius _____ Bend Angle _____

F. Fasteners and Mounting Hardware:

Deficiency	Location
_____	_____
_____	_____
_____	_____
_____	_____
_____	_____

G. Guards:

Type _____

Properly Bonded _____

Physical condition _____

Note Location and Nature of Specific Deficiencies below:

Location	Deficiency
_____	_____
_____	_____
_____	_____
_____	_____
_____	_____

PART IV - FAULT PROTECTION SUBSYSTEM (Safety Ground)

A. Grounding Conductor (Green Wire):

1. Connection diagram (Include transformer connections and neutral connection in first service disconnect (main breaker)).

2. Cable sizes - Determine and indicate on the above diagram the size cables used for the connections.

3. Is grounding (green) conductor in same conduit as service (black) and grounded (neutral/white) conductors'?

Yes No if no, record all locations/runs.

Equipment Served	Location	Length of Cable

4. Determine and record connections to earth electrode subsystem:

Connection	Location	Length and Size of Cable

B. Equipment Safety Ground (Schematic or description of safety network):

(On above diagram (or on the engineering drawings) indicate wire sizes, connection points, use of conduit, cable tray connections, etc.)

C. Stray Current Measurements:

Location	Current Reading

PART V- SIGNAL REFERENCE SUBSYSTEM GROUNDING

A. General Description of Signal Grounding Network (Use sketches where appropriate):

B. Identify Wires and Buses Serving as Signal Ground Conductors (Record locations):

Location	Function

C. Ground System Point-to-Point Resistance (Perform selected measurements with double balanced dc bridge):

Test Points	Resistance

PART VI- NOISE AN D CURRENT LEVELS

A. Stray Power Current Measurements:

Test Point or Conductor	Current Level

B. Noise Voltage Measurements (Attach (or include) photographs of oscilloscope displays):

PART VII - SHIELDING

A. Existing Shields (Intentional and incidental):

Nature	Location

B. Condition of Shields:

System or Location	Nature of Deficiency

C. Cables and Connectors:

Location	Deficiency

2.2.3 Guidelines for Upgrading.

Use the information available from the corrected drawings and the facility survey to determine if modification or upgrading of the facility is necessary. Compare the grounding, bonding, shielding, and lightning protection net works and practices with the recommendations of Chapter 1 of this volume. While making these comparisons, be particularly alert for indications of operational, installation, or maintenance problems (either with a system or with an equipment) which may be directly or indirectly related to a noted deficiency. Where a need for upgrading is indicated, determine what retrofit steps would be necessary and estimate the costs. If the operational mission of the facility justifies the cost, proceed with the implementation.

The following guidelines may be used to help evaluate the survey findings and to help define the retrofit steps which should be taken. This set of guidelines is not to be considered as all inclusive. Specific situations can be expected to arise that will not be adequately covered by the guidelines. These situations must be recognized and dealt with on an individual basis.

a. If the measured resistance of the earth electrode subsystem is greater than 10 ohms, review Section 1.2.1 to help identify the reason for the high resistance (see also Volume I, Section 2.3). In addition, review the past record (if available) of earth resistance measurements for signs of gradual increases in resistance as well as sudden resistance changes. (Discard from consideration "zero" resistance reading and other similarly unobtainable values. Review Section 2.2.2.2.1 for the correct measurement procedure.) Examine the resistance readings for possible correlation with site changes (Section 1.2.1.3) and local climatic conditions (Section 1.2.1.4). Either of these situations could produce an increase in the resistance of the electrode and necessitate upgrading the system to reachieve 10 ohms.

b. Once the reason for the high resistance is established, determine the most appropriate method in terms of cost and ease of implementation for reducing the resistance. Typical alternatives include the use of more or longer ground rods, the installation of horizontal grids or wires (Section 1.2.2.3), chemical salting (see Volume I, Section 2.9.3), or the drilling of wells down to the permanent water table.

c. Carefully review the building drawings to insure that proper connections to the earth electrode subsystem are provided for all elements of the facility (see Sections 1.2.3, 1.3.2.2.2, and 1.5). For example, where building expansions have occurred or major equipment additions or relocations have been made, the earth electrode subsystem should be expanded to serve the new areas. Where such expansions are made, they should conform to Section 1.2.3.

d. All specific earth electrode subsystem installation deficiencies such as grounding conductor sizes not in conformance with MIL-STD-188-124A requirements or maintenance deficiencies such as loose or corroded bonds and fasteners should be corrected as soon as possible.

e. If no lightning protection subsystem exists for the structure, consult Volume I, Section 3.8 for guidance in determining whether a subsystem needs to be installed. If a new subsystem is installed, it should conform to the recommendations of Section 1.3.

f. Where a structural lightning protection subsystem exists, all deficiencies noted during the survey should be corrected. For example:

(1) all seriously degraded damaged air terminals should be replaced;

(2) air terminals should be relocated as needed so that they are the objects of highest elevation on the structure; and where they provide a 1:1 cone of protection for the antennas without affecting their operation;

(3) down conductors should be rerouted or additional down conductors added where more direct paths to the earth are needed (see Section 1.3.2.2);

(4) if not already provided, the lightning protection network should be interconnected with the earth electrode subsystem, electrical ground, utility pipes, equipment grounds, and with the building ground to provide common grounding for all;

(5) all corroded and mechanically darnaged connectors and fasteners should be replaced with UL-approved devices; and

(6) missing and severely damaged guards should be replaced.

g. The lightning protection subsystem should be expanded as needed to provide protection for those parts of the facility extending outside the established cones of protection (see Section 1.3.2.1).

h. At those facilities where the lightning outage history indicates a need for surge protection on either signal or power lines, appropriate lightning and surge protectors should be installed. Insure that the protectors are adequate for protecting the type of equipment on which installed (see Volume I, Section 10.4.2.3).

i. Review electrical wiring diagrams and the electrical equipment distribution within the facility to determine possible direct or indirect coupling paths between noisy equipments and susceptible electronic apparatus. Apply corrective measures such as:

(1) relocate equipments (see Section 1.9.1);

(2) redistribute the electrical load so that potentially interfering equipments are served by separate feeders;

(3) install electrical feeders in steel conduit or raceway to reduce magnetic fields; and

(4) relocate signal lines to sensitive equipments at the maximum possible distance from power conductors feeding noisy equipments.

j. Correlate, if possible, any evidence of equipment malfunctions due to electrical noise on signal or control cables with the measured values of stray currents or voltages on grounding conductors and on cable shields. [f such correlation exists, determine as best as possible the probable cause of such noise voltages using the principles set forth in Volume I, Chapters 5 and 6. Then, apply the techniques described in Sections 1.5, 1.8, and 1.9 to reduce the noise to a level acceptable to the equipments in the facility.

k. Carefully review the drawings of the facility to identify the type of signal grounding employed throughout the facility. If operational experience as indicated by maintenance logs or outage reports and operator comments reveal problems with system noise and interference attributable to grounding deficiencies, review in detail Volume I, Chapters 5 and 6, and Section 1.5 of this volume. Based on this review and the relative severity of the problems, choose the most appropriate noise minimization procedures and implement them.

1. Where shielding deficiencies exist, determine if the need is for additional shielding or for improved maintenance of the existing shields, If no shielding is present, design and install shields as needed. See Section 1.8.1 for design assistance, If the existing shields have simply degraded through poor aperture control and poor bond or seam maintenance, implement corrective measures immediately (see Sections 1.7 and 1.8 and also see Sections 3.3 and 3.4).

m. If the structure is used as a lightning down conductor or as an electrical safety grounding conductor, see that all joints are effectively bonded (see Section 1.7.1).

n. If more than 25 percent of the bonds measured exhibit a resistance greater than one milliohm (after the steps recommended in Step "d" of Section 2.2.2.2.2 are taken), all bonds throughout the facility should be inspected carefully, and the resistance measured. Each one found deficient should be redone in accordance with the recommendations set forth in Section 1.7.

o. Indicate all changes made during the upgrading process on the facility drawings.

2.2.4 Expansion of Existing Facilities.

As operational requirements change, expansions of the grounding and shielding networks in a facility will be necessary. When such actions are necessary, it is essential that the added elements maintain the philosophy and integrity of the existing networks. When making additions or modifications to shielded areas, the original level of shielding integrity must be maintained. Particular attention must be directed to the careful bonding of connector shells, the installation of filters, and other practices which may drastically degrade tile shielding effectiveness of a housing or other enclosure if not controlled.

Following major additions to the facility, the facility should be resurveyed. Any deficiencies in the installation or compromises to the original networks should be corrected. File a copy of all survey results in the maintenance file for the facility to provide the initial starting point for the maintenance history. Finally review all drawings to verify that they are complete and accurately reflect the actual installation.

2.2.5 Expansion of Existing Facilities for Higher Frequency Grounds.

Most existing communication facilities will require the addition of an equipotential plane to satisfy the grounding requirements for frequencies above 30 kHz. When both higher and lower frequency requirements must be met, a hybrid system may be required but in most cases the equipotential plane will suffice for both requirements.

The equipotential plane may be installed on the floor under the or carpet. If this is impractical, the equipotential plane may be installed overhead but every consideration should be given to placing it on or in the floor. In some cases it may be installed under the floor with ground risers penetrating the floor to the equipments installed above. Figure 2-15 is an example of the plane installed overhead.

2.3 MAINTENANCE. Well designed and properly installed grounding, bonding, shielding, and lightning protection networks in a new facility or in an existing facility can rapidly deteriorate unless adequate and thorough maintenance is performed at regular intervals throughout the life of the facility.

2.3.1 Schedules and Records.

In a new facility, consider the initial checkout (see Section 1.13) as the first maintenance inspection for the facility. Utilize the results or information provided by the initial facility inspection as a base or starting point of comparison of the results of subsequent inspections. Subsequent inspections should be performed at least annually. In addition, a thorough inspection should be performed on affected parts or elements of the networks following major changes or additions to the facility either of the structure itself or of the equipment or systems located in the structure.

In an older facility, consider the survey (if performed) described in Section 2.2 as the initial maintenance inspection. If a survey has not been made, an initial inspection of the facility should be made to determine the general condition of grounding networks, bonds, shields, and lightning protection subsystems. Subsequent to the survey or initial inspection, a maintenance inspection should be conducted annually and after major changes or additions to the facility as discussed above.

Chronological records of all tests and observations should be maintained. When a significant departure from the record is noted, an investigation should be performed to determine the cause and the necessary corrective action taken. Any measurement (i.e., earth electrode subsystem resistance, bond resistance, point-to-point ground network resistance, etc.) not meeting the specified or recommended value should be immediately investigated to see if rework is desired.

2.3.2 Maintenance Procedures. Maintenance procedures for the earth electrode subsystem, lightning protection subsystem, signal reference subsystem, fault protection subsystem, facility ground system, bonding, and shielding are presented in Sections 2.3.2.1 through 2.3.2.6. Upon completion of any or all of these procedures, prepare the Facility Maintenance Report of Section 2.3.3 and place it in the permanent maintenance file or record along with other supporting evidence such as test results, photographs, and drawings. Where deficiencies are noted that are immediately correctable (e.g., broken or misplaced bond wires or jumpers, loose bolts or screws, or other minor defects), they should be corrected with appropriate notation made on the Facility Maintenance Report. A Major Discrepancy Report (illustrated in Figure 2-16) should be made out on major deficiencies (e.g., earth electrode resistance too high, parts of structure outside the cone of protection, excessive current levels on signal ground conductors, etc.) to identify those areas needing significant rework or upgrading. (Do not confuse rework or upgrading associated with normal maintenance activity with a total facility rework or upgrading as described in Section 2.2 unless the facility has degraded to the point where a major overhaul is necessary for minimal performance or acceptability.)

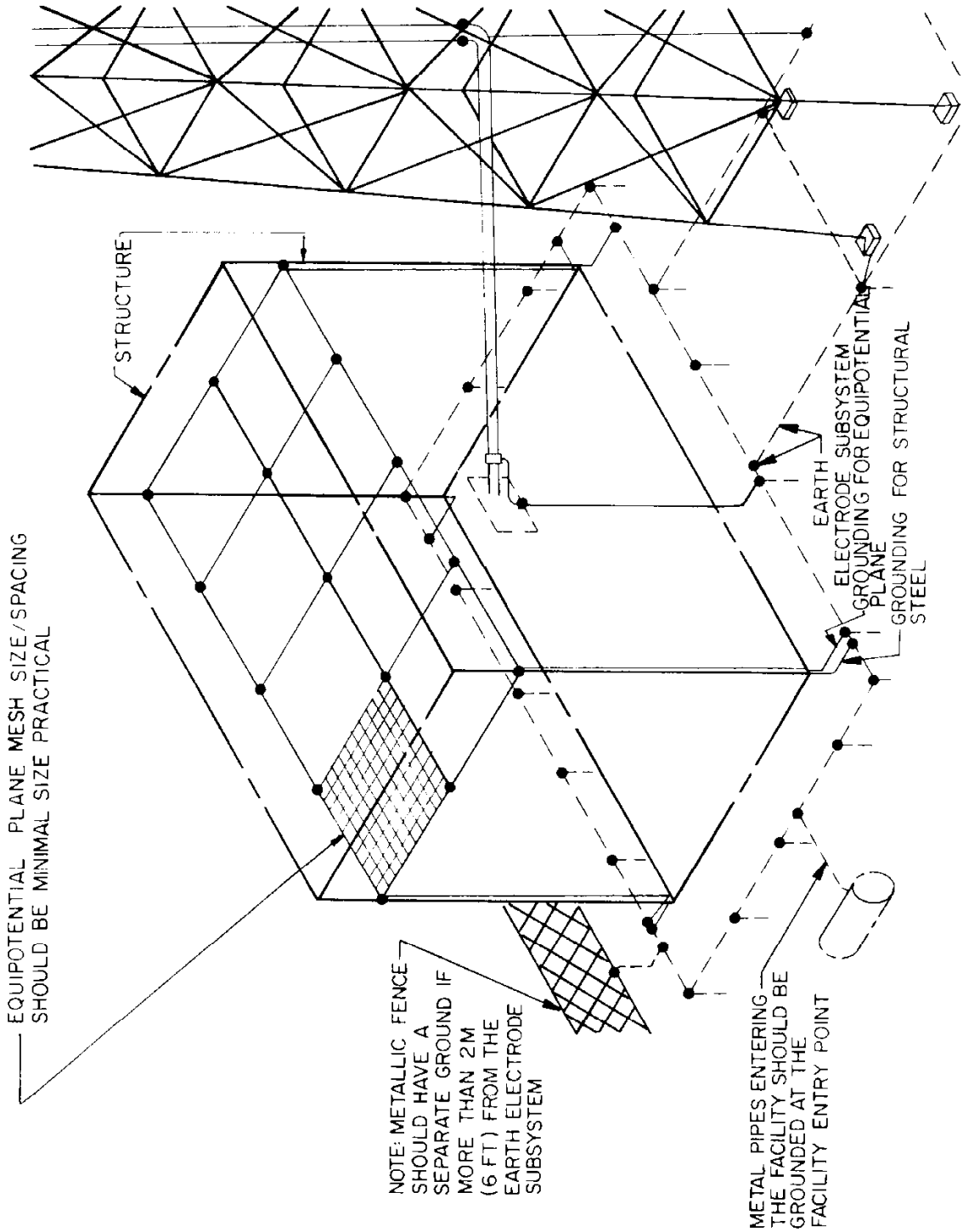

Figure 2-15. Example of Equipotential or Multipoint Grounding

MAJOR DISCREPANCY REPORT

1. Facility _____

2. Location _____

_____

3. Description of discrepancy _____

_____

_____

_____

4. Inspector's remarks _____

_____

_____

6. Date _____

7. Initials _____

Figure 2-16. Major Discrepancy Report Form

2.3.2.1 Facility Maintenance Procedure (Earth Electrode Subsystem).

1. TECHNICAL DATA REFERENCES:

a. Grounding, Bonding, and Shielding, MIL-HDBK-419A Volumes I and II, MIL-STD-188-124A.

b. Engineering drawings which show earth electrode subsystem.

2. RELATED MAINTENANCE PROCEDURES:

a. Lightning Protection.

b. Fault Protection.

c. Bonding.

3. APPLICABLE TEST PROCEDURES:

a. Earth Resistance Test (see Section 2.2.2.2.1).

b. Bond Resistance Test (see Section 2.2.2.3.1).

4. TEST EQUIPMENT REQUIRED:

a. Double Balanced DC Resistance Bridge or other acceptable Ohmmeter.

b. Earth Resistance Test Set.

c. 30-meter (100-foot) Measuring Tape or Surveyor's Chain.

d. Camera.

5. MATERIALS REQUIRED:

a. Test leads for earth resistance test set if not supplied by manufacturer or if not available. Where leads longer than those supplied by the manufacturer are needed, extra lengths of stranded No. 16 or No. 18 wire are necessary.

b. Ground probes if not supplied with earth resistance test set (see Section 1.2.1.1).

c. Film and flash bulbs or electronic flash for camera.

6. PROCEDURE:

a. Warm up equipment according to manufacturer's instructions.

b. Measure the resistance to earth of the earth electrode subsystem.

(1) If the earth electrode subsystem is directly accessible through a ground well, connect the C_1P_1 terminals of the test set directly to a ground rod or the interconnecting cable.

(2) If the electrode is not directly accessible, connect C_1P_1 to an interconnecting riser such as a signal ground cable, the power system grounding conductor, a lightning down conductor, or a structural grounding connection (see Section 1.2.3).

c. Enter the measured value of earth resistance on the Facility Maintenance Report Form (Section 2.3.3).

d. Inspect all accessible portions of the system. Particularly look for loose connections, corrosion, and physical damage. (Take photographs as necessary to show nature of problems for before and after comparisons and for historical docurmentation purposes.) Note any undocumented changes or modifications to system. Update drawings as needed.

e. Correct minor deficiencies (e.g., clean surfaces, retighten or replace connectors and fasteners, reapply protective coatings, etc.).

f. Major deficiencies should be the subject of a Major Discrepancy Report. After major deficiencies are corrected, the facility should be reinspected.

g. Provide other requested information on the inspection form. File the inspection report form along with supporting data or documentation in the permanent maintenance file for the facility.

2.3.2.2 Facility Maintenance Procedure (Lightning Protection Subsystem).

1. TECHNICAL DATA REFERENCES:

a. Grounding, Bonding, and Shielding, MIL-HDBK-419A Volumes I and II, MIL-STD-188-124A.

b. Underwriter's Laboratories Publication UL 96A or Lightning Protection Code, NFPA No.78.

c. Engineering drawings of the lightning protection networks.

d. Architects drawings showing building profile views.

2. RELATED MAINTENANCE PROCEDURES:

Bonding.

3. APPLICABLE TEST PROCEDURES:

Bond Resistance Test (see Section 2.2.2.3.1).

4. TEST EQUIPMENT REQUIRED:

a. Double Balanced Resistance Bridge or approved Ohmmeter capable of measuring one milliohm and five milliohms.

b. Camera, if desired.

5. MATERIALS REQUIRED:

Film and flash bulbs or electronic flash for camera.

6. PROCEDURE:

a. Follow the procedure of Section 2.2.2.2.3.

b. Examine all elements of the structure and antennas to insure that an adequate cone of protection exists (see Section 1.3.2.1). Note any additions to the exterior of the structure; make sure that all such additions do not extend outside of the established cone of protection.

c. Perform a comprehensive inspection of the entire lightning protection subsystem. Note all deficiencies in Part II of the Facility Maintenance Report Form. Complete a Major Deficiency Report on all deficiencies not correctable during the inspection.

2.3.2.3 Facility Maintenance Procedure (Bonding).

1. TECHNICAL DATA REFERENCES:

Grounding, Bonding, and Shielding, MIL-HDBK-419A Volumes I and II, MIL-STD-188-124A.

2. RELATED MAINTENANCE PROCEDURES:

None.

3. APPLICABLE TEST PROCEDURE:

Bond Resistance Test (see Section 2.2.2.3.1).

4. TEST EQUIPMENT REQUIRED:

a. Double Balanced Resistance Bridge or approved Ohmmeter capable of measuring resistances of less than one milliohm.

b. Camera, if desired.

5. MATERIALS REQUIRED:

Film and flashbulbs or electronic flash for camera, if used.

6. PROCEDURES:

a. Follow the procedure of Section 2.2.2.2.2.

b. Record the results of the inspection and measurements in Part III of the Facility Maintenance Report. Attach supporting evidence such as photographs, sketches, etc.

c. File a Major Discrepancy Report on all noncorrectable deficiencies.

2.3.2.4 Facility Maintenance Procedure (Fault Protection Subsystem (Safety Ground)).

1. TECHNICAL DATA REFERENCES:

a. Grounding, Bonding, and Shielding, MIL-HDBK-419A Volumes I and II, MIL-STD-188-124A.

b. National Electrical Code NFPA 70.

2. RELATED MAINTENANCE PROCEDURES:

a. Earth Electrode Subsystem.

b. Bonding.

3. APPLICABLE TEST PROCEDURES:

Bond Resistance Test (see Section 2.2.2.3.1).

4. TEST EQUIPMENT REQUIRED:

a. Double Balanced Resistance Bridge or approved Ohmmeter capable of measuring resistances of one milliohm, five milliohms and one megohm.

b. Clamp-on AC Ammeter.

c. Camera, if desired.

5. MATERIALS REQUIRED:

Film and flashbulbs or electronic flash for camera, if used.

6. PROCEDURE:

a. Follow the inspection procedure of Section 2.2.2.2.4.

b. Perform spot check resistance measurements on power receptacles and stray current measurements on safety ground to insure that the ground terminals on the receptacles are properly grounded to the facility ground system and no currents are flowing on grounding conductor (see Sections 1.4.5 and 3.2.2).

c. Record the results of the inspection measured stray current levels and resistance values in Part IV of the Facility Maintenance Report.

d. File a Major Discrepancy Report on all major deficiencies (particularly those representing a violation of MIL-STD-188-124A and the National Electrical Code).

2.3.2.5 Facility Maintenance Procedure (Signal Reference Subsystem (Signal Grounding)).

1. TECHNICAL DATA REFERENCES:

Grounding, Bonding, and Shielding, MIL-HDBK-419A Volumes I and II, MIL-STD-188-124A.

2. RELATED MAINTENANCE PROCEDURE:

Bonding.

3. APPLICABLE TEST PROCEDURES:

a. Bond Resistance Test (see Section 2.2.2.3.1).

b. Ground System Noise Current Test (see Section 2.2.2.3.2).

c. Differential Noise Voltage Test (see Section 2.2.2.3.3).

4. TEST EQUIPMENT REQUIRED:

a. Double Balanced Resistance Bridge or approved Ohmmeter capable of measuring resistances of one milliohm, 10 milliohms, and 100 milliohms.

b. 50-MHz Oscilloscope.

c. Isolation Transformer for Oscilloscope.

d. Clamp-on Current Probe for Oscilloscope.

e. Oscilloscope Camera.

5. MATERIALS REQUIRED:

a. Required lengths of coaxial cable for oscilloscope probes.

b. Film for oscilloscope camera.

6. PROCEDURE:

a. Follow the inspection and test procedures set forth in Sections 2.2.2.2.5 and 2.2.2.2.6.

b. Record the results of the inspection and measurements in Part V of the Facility Maintenance Report.

c. File Major Discrepancy Reports as needed.

2.3.2.6 Facility Maintenance Procedure (Shielding).

1. TECHNICAL DATA REFERENCES:

Grounding, Bonding and Shielding, MIL-HDBK-419A Volumes I and II, MIL-STD-188-124A.

2. RELATED MAINTENANCE PROCEDURE:

Bonding.

3. Applicable TEST PROCEDURE:

Bond Resistance Test (see Section 2.2.2.3.1).

4. TEST EQUIPMENT REQUIRED:

Double Balanced Resistance Bridge or approved Ohmmeter capable of measuring resistances of one milliohm and five milliohms.

5. MATERIALS REQUIRED:

None.

6. PROCEDURE:

a. Inspect electromagnetic and personnel protection shields for continued shielding integrity, grounding, and bonding (see Section 2.2.2.2.7). Information on design and materials is available in Sections 1.8.2 and 1.8.4.

b. Complete Section IV of the Facility Report of Section 2.3.3.

c. File Major Discrepancy Reports as needed.

2.3.3 Facility Maintenance Report.

Facility _____ Date _____

Location _____ Inspector _____

PART I - EARTH ELECTRODE SUBSYSTEM

A. Resistance Measurement:

Sketch of Test Setup (Indicate Probe Locations, Spacings, etc.).

(Enter raw test data and plot resistance readings on attached form)

B. Resistance: _____ ohms. (Fall-of-Potential Method)

(Note precautions set forth in Section 2.2.2.2.1)

C. Weather:

Wet _____ Dry _____ Temperature _____ °F
Snow _____ Rain _____ Mist _____
Days since last rainfall (or snow): Same day _____ 1-5 days _____
5-19 days _____ more than 20 _____
General Soil Moisture: Dry _____ Damp _____ Wet _____

D. Months since last measurement: _____

E. Value of last measurement: _____

F. Comparison with last measurement: Lower _____ Higher _____ Same _____

G. Inspection Checklist:

	Initial
1. Check all accessible bonds and connections for looseness, corrosion, and physical damage.	_____
2. Measure stray current in grounding conductor between service disconnecting means and earth electrode subsystem (Current reading _____).	_____
3. Check for additions or modifications made since last inspection. Update existing drawings.	_____
4. Generally inspect facility site for changes (in vegetation, roads, parking areas, excavation, drainage, etc.) that could cause future earth resistance variations. Note such changes in General Comments below.	_____

5. Inspection Results or Observations.

Location	Condition or Deficiency	Corrective Action Taken

General Comments: _____

PART II - LIGHTNING PROTECTION SUBSYSTEM

A. Cone of Protection:

Condition	Initial
No change from previous inspection. (All facility components and antennas are within 1:1 cone of protection.)	_____
Additions made but within 1:1 cone of protection (update drawings to show locations of additions).	_____
Lightning protection subsystem needs expanding to include new additions.	_____

B. Inspection Checklist:

1.	Check for evidence of burning, pitting, as well as melting of air terminals.	_____
2.	Check for burned or melted down conductors and fasteners.	_____
3.	Check for broken or severely damaged as well as distorted roof conductors, down conductors, and bonding jumpers.	_____
4.	Look for signs of arcing or flashover indicating a need for bonding jumpers or spark gaps.	_____
5.	Check for corroded or loose connectors and fasteners.	_____
6.	Make sure that copper-to-aluminum contact does not occur except through UL-approved bimetallic connectors.	_____
7.	Make sure that all guards for down conductors are in place and without severe mechanical damage.	_____
8.	Make sure that all guards are bonded to down conductors (at both ends of guard).	_____

9. Record all deficiencies below:

Location	Deficiency	Corrective Action Taken

10. Addltional Comments: _____

PART III - BONDING

A. General Overall Condition (check):

Excellent _____ Good _____ Poor _____

B. Resistance Measurements:

{Record the resistance of all bonds measured. See particularly Step d of Section 2.2.2.2.2 for those bonds which measure greater than one milliohm.)

Location of Bond	Resistance in milliohms

c. Deficiencies:

Location	Condition or Deficiency	Corrective Action Taken

Part IV - FAULT PROTECTION SUBSYSTEM (SAFETY GROUND)

A. Requirements Checklist:

		Initial
1.	Inspect all electrical/electronic equipments for safety grounding conductors (green wire). Check to see that sizes conform to all designated requirements.	_____
2.	Spot check all green wire connections to see that they are tight and free of corrosion.	_____
3.	Check inside equipments, switch boxes, and distribution panels to see that the white wire (neutral) is not grounded at these locations. With neutral disconnected at first service disconnect, is resistance to ground at least one Megohm?	_____
4.	Check the grounding connection at the first service disconnect to make sure it is tight and free of corrosion.	_____
5.	Generally check the electrical supporting structures (see Section 1.4.5) for looseness in joints or bonds and evidence of corrosion.	_____
6.	Check to see if the neutral and green conductors are properly interconnected at the first service disconnect and grounded (MIL-STD-188-124A Section 5.1.1.2.5).	_____

7. Record all deficiencies:

Location	Nature of Deficiency	Corrective Action Taken
_____	_____	_____
_____	_____	_____
_____	_____	_____
_____	_____	_____
_____	_____	_____

B. Stray Current Measurements:

Location	Reading
_____	_____
_____	_____
_____	_____
_____	_____
_____	_____

PART V - SIGNAL REFERENCE SUBSYSTEM GROUNDING

A. Inspection Checklist: Initial

1. Visually inspect the signal reference subsystem for compromises in violation of the recommendations of Section 1.5. _____

2. Inspect connections to equipment signal ground terminals (see Section 3.2.1.1.2) and equipotential plane for looseness and corrosion. Apply corrective measures. _____

3. Check to see if any new equipments have been added or relocated since the last inspection. If so, check interconnecting cables for conformance with the requirements of Section 1.5. _____

4. Insure that labels and protective covers are in place and free of serious damage. _____

5. Inspect equipment grounding cables (see Section 1.5) for correct sizes, physical damage, and properly bonded end connections. _____

6. Record all deficiencies below:

Location	Deficiency	Corrective Action Taken

B. Ground System Point-to-Point Resistance (See Section 2.2.2.2.5 for selection of measurement locations):

Test Points	Measured Resistance

C. Attach Results of Ground System Noise Survey. Carefully compare results with those obtained during previous inspection to detect noticeable and significant changes in voltage and current levels.

PART VI - FACILITY SHIELDING (Designated rf Barrier)

A. Inspection Checklist:

	Initial
1. Check personnel barriers for mechanical strength, signs of damage, and proper grounding (if metallic).	_____
2. Insure that all shields around high voltage apparatus are properly labeled.	_____
3. Check electromagnetic shields for adequate bonding.	_____
4. Inspect all electromagnetic shields for holes or openings added since last inspection. Check to see that such openings are properly covered with screening or covers.	_____
5. Inspect power line and signal line filters on wires entering shielded areas for proper peripheral grounding.	_____
6. Inspect cable shield pigtails for excessive length.	_____
7. Inspect rf connectors for tightness, evidence of corrosion, or physical damage.	_____
8. Ensure that all grounding conductors penetrating a designated rf barrier are peripherally bonded to barrier.	_____

B. Note Deficiencies Below:

Location	Deficiency	Corrective Action Taken

2.3.4 Performance Evaluation Program.

a. Purpose. This program provides the checklist and procedures for the evaluation of compliance to overall Grounding, Bonding, and Shielding (GBS) practices prescribed in Volumes I and II.

b. Reference Documents.

(1) MIL-STD-188-124A, Grounding, Bonding, and Shielding for Common Long Haul/Tactical Communication Systems.

(2) National Electrical Code.

(3) Lightning Protection Code.

c Procedures. The evaluation for Grounding, Bonding, and Shielding (GBS) is accomplished mainly through visual inspection by an evaluator qualified in GBS. The checklist for accomplishing the inspection is shown in Section d below. The checklist requires a "yes" or "no" answer. Shown in the checklist is the proper answer (indicated by X) for compliance with GBS requirements. The test procedure for measuring resistance to ground of the earth electrode subsystem is provided in Volume I, Chapter 2. A clamp-on ammeter with a full scale range of six amps on the lowest scale is required to measure ac current. Also required to measure bond resistance is a milliohm meter. Procedures for using these equipments come with the instruction book. An ohmmeter with the capability to measure one megohm resistance will also be required.

d. The Performance Evaluation Program GBS checklist follows:

PERFORMANCE EVALUATION PROGRAM
GROUNDING, BONDING, SHIELDING

Evaluation Station _____ Date _____

		YES	NO
1.	Is the resistance to earth of the earth electrode subsystem less than 10 ohms? MIL-STD-188-124A, 5.1.1.1.3.1	x	
2.	Are the lightning down conductors continuous and welded or brazed to the earth electrode subsystem? MIL-STD-188-124A, 5.1.1.1.5	x	
3.	Are underground metal pipes entering the facility bonded to the earth electrode subsystem? MIL-STD-188-124A, 5.1.1.1.6	x	
4.	a. Was the fall-of-potential method used to measure the earth electrode subsystem?	x	
	b. Is the data available for inspection? MIL-STD-188-124A, 5.1.1.1.7	x	
5.	a. Is there a separate grounding conductor (green wire) for the power system?	x	
	b. Is it installed with phase and neutral conductors? MIL-STD-188-124A, 5.1.1.2.1	x	
	c. Is conduit used in lieu of the separate grounding conductor? MIL-STD-188-124A, 5.1.1.2.5.1		x
6.	Are all non-current carrying metal objects grounded? MIL-STD-188-124A, 5.1.1.2.1	x	
7.	Are all main metallic structural members electrically continuous and grounded? MIL-STD-188-124A, 5.1.1.2.2	x	
8.	Are all metallic piping, tubing and supports electrically continuous and grounded? MIL-STD-188-124A, 5.1.1.2.3	x	
9.	Are all electrical supporting structures electrically continuous and grounded? MIL-STD-188-124A, 5.1.1.2.4	x	
10.	a. Is the ac neutral grounded only at the service entrance to the earth electrode subsystem?	x	
	b. Is there ac current on the green wire or on the signal reference network? MIL-STD-188-124A, 5.1.1.2.5; NEC 250-23		x

		YES	NO
11.	a. Are all generators grounded?	x	
	b. Are the frames of the generators grounded?	x	
	c. Are the neutrals of the generators tied together and grounded by a single lead to the earth electrode subsystem?	x	
	MIL-STD-188-124A, 5.1.1.2.5.2; NEC 250-26		
12.	Are the ground terminals of all ac outlets connected to the facility ground system through the grounding (green) conductor?	x	
	MIL-STD-188-124A, 5.1.1.2.5.3		
13.	a. Is one leg of each dc power system grounded?	x	
	b. At one point only, i.e, source or load?	x	
	MIL-STD-188-124A, 5.1.1.2.5.5		
14.	a. Is the facility protected against lightning?	x	
	b. Are all antennas inside a 1:1 cone of protection?	x	
	MIL-STD- 188-124A, 5.1.1.3.2		
15.	Do any down conductors of the lightning protection subsystem have bends with a radius less than 20 cm (8 inches) or bends not less than 90°?		x
	MIL-STD-188-124A, 5.1.1.3.3		
16.	Are all metal objects within 1.8 meters (6 ft) of the lightning down lead bonded to the down conductor or grounded to the facility ground?	x	
	MIL-STD-188-124A, 5.1.1.3.3		
17.	Are all bonds between elements of the lightning protection subsystem welded or brazed or secured by UL-approved clamps?	x	
	MIL-STD-188-124A, 5.1.1.3.4		
18.	a. Does the tower have an earth electrode subsystem?	x	
	b. Is it connected to the earth electrode subsystem of the building?	x	
	MIL-STD-188-124A, 5.1.1.3.8.1		
19.	a. Are the down conductors from the tower bonded to the tower at the base?	x	
	b. Are the down conductors run through metal conduit?	x	x
	c. If yes, is the conductor bonded to the conduit at each end?	x	
	MIL-STD-188-124A, 5.1.1.3.8.3 and 5.1.1.3.7		
20.	Is the waveguide grounded (1) near the antenna (2) at the vertical to horizontal transition and (3) at the waveguide entry port?	x	
	MIL-STD-188-124A, 5.1.1.3.8.4		

		YES	NO
21.	Are all hand rails, ladders, stairways, antenna pedestals, and other objects subject to human contact grounded? MIL-STD-188-124A, 5.1.1.3.9	x	
22.	Are power lines at the point of entry to the facility protected with approved lightning arresters? MIL-STD-188-124A, 5.1.1.3.12	x	
23.	Are overall cable shields grounded at each end? MIL-STD-188--124A, 5.1.2.1.1.4	x	
24.	Do any bonds show any signs of corrosion? MIL-STD-188-124A, 5.2.3.1		x
25.	Are all bolted or threaded fastener bonds adequately torqued? MIL-STD-188-124A, 5.2.3.3 and 5.2.6.5; Table 1-23	x	
26.	Do any bonds have high resistance across the bond? MIL-STD-188-124A, 5.2.4		x
27.	Is soft solder used for bonds subject to lightning or power fault currents? MIL-STD-188-124A, 5.2.6.4		x
28.	Are C-clamps or spring clamps used for bonding? MIL-STD-188-124A, 5.2.6.6		x
29.	Are bonded areas visually clean? MIL-STD-188-124A, 5.2.8	x	
30.	Is each subassembly and chassis adequately bonded to the rack, frame, or cabinet? MIL-STD-188-124A, 5.2.10	x	
31.	Are cable connectors adequately mounted? MIL-STD-188-124A, 5.2.11	x	
32.	a. Are shields of coaxial cable adequately fastened?	x	
	b. Are shield pigtails less than 2.5 cm (1 inch) long? MIL-STD-188-124A, 5.2.12	x	

		YES	NO
33.	a. Do shielded enclosures appear to retain their integrity?	x	
	b. Do grounding conductors cross shielded enclosure without being bonded to enclosure?		x
	MIL-STD-188-124A, 5.3.1		
34.	In the routing and layout of wire, are power lines and high level signal lines kept separate from low level signal lines?	x	
	MIL-STD-188-124A, 5.3.2.5		
35.	Is there a need for a Lower Frequency Network?	x	x
	MIL-STD-188-124A, 5.1.1.4.3		
36.	Is there a need for a Higher Frequency Network?	x	x
	MIL-STD-188-124A, 5.1.1.4.2		
37.	Is a Lower Frequency Network installed?	x	x
	MIL-STD-188-124A, 5.1.1.4.3		
38.	Is a Higher Frequency Network installed?	x	x
	MIL-STD-188-124A, 5.1.1.4.2		
39.	Is the equipotential plane bonded to the facility ground earth electrode subsystem?	x	
	MIL-STD-188-124A, 5.1.1.4.2		
40.	Have any resistance measurements been conducted on the equipotential plane?		x
	MIL-STD-188-124A, 5.1.2.1.1		
41.	Are ground-fault-circuit-interrupters (GFCI) installed on 15 and 20 AMP convenience outlets?	x	
	MIL-STD-188-124A, 5.1.1.2.5.7 and 5.1.2.2.2		

2.4 GROUNDING CONSIDERATIONS FOR CLASSIFIED INFORMATION PROCESSORS (RED/BLACK EQUIPMENT) INSTALLED PRIOR TO THIS HANDBOOK.

2.4.1 Introduction. Previous chapters of this handbook provide grounding, bonding, and shielding practices for unclassified (BLACK) portions of the facilities or systems, and although the BLACK facility ground subsystem constitutes the basic ground for the whole facility, special additional grounding considerations must be designed into those facilities which process classified (RED) information. This section will cover those requirements which are necessary for the RED/BLACK grounding subsystem.

2.4.2 Existing Facilities. In the past, communication facilities have been designed and installed with separate RED and BLACK ground systems isolated from each other as shown in Figure 2-17. Each of these systems was generally installed as single-point or tree-type grounding networks. While these systems generally do not meet the current requirements of MIL-STD-188-124A, they continue to be in use at existing facilities. Descriptions of these systems are therefore included for maintenance purposes only. Single-point signal ground systems (either RED or BLACK) will not be installed in new or upgraded facilities processing classified information. Any major building or facility rehabilitation should include upgrading the signal reference subsystem to include use of the equipotential plane. All additions to existing buildings shall include an equipotential plane in accordance with MIL-STD-188-124A.

2.4.3 Protection Grounds. The methods of providing a ground for the signal reference subsystem are variable, and dependent on system equipment type, configuration, level of signaling, number of equipments, and location of the facility. These methods were intended to provide general parameters and outline the basic concept of a grounding system which would ensure an adequate signal-to-noise ratio in signaling circuits while affording requisite system security. The prime purpose of this guidance is to reduce or eliminate the number of points in the limited exclusion area (LEA) at which the RED equipment area nonferrous shield or signal ground makes contact with the distribution facilities or components of the ac fault protection subsystem in the LEA (including the equipment cases, duct, conduit, frames, panels) at other than intended points. Such isolation was intended to help reduce the probability of compromising emanations on the ac fault protection subsystem in the LEA. The physical makeup of many equipments in the government inventory however precludes complete separation of the ac fault protection subsystem from the signal reference subsystem. The ac fault protection subsystem was made up of several components for which the prime purpose is to safeguard life and equipment throughout the facility and is generally based on requirements defined in MIL-STD-188-124A. (Also See Figure 1-69.) The following comprise the fault protection ground subsystem:

a. AC Metal. The ac metallic distribution subsystem (part of the fault protection subsystem) of a facility includes all equipment cases, cabinet racks, duct, conduit (rigid, EMT, flexible) metallic cellular flooring, technical power panels, main power panels, and distribution frames, connected or interconnected in such a manner that the components are electrically common and connected to the ac protection ground or earth electrode subsystem. (See Figure 1-69.) Electrical continuity of the system is accomplished via metal-to-metal contact.

b. Grounding (Green) Wire. The ac power required to operate equipment in the facility has the hazard integrity doubly insured by the inclusion of an unbroken green grounding conductor within the normal ac metallic distribution or the fault protection subsystem of the facility. This green grounding conductor is

connected from the grounding electrode or bus of the main (first) service disconnect power panel to each case of all equipments in the LEA and Controlled Access Area (CAA) (see Figure 1-69). The green wire protective grounding feeder has no TEMPEST connotations or engineering techniques nor relationship with or part of the signal reference subsystem.

2.4.4 Signal Reference Subsystem. Under the old RED/BLACK criteria, the signal reference subsystem was called the signal ground system and was made up of those elements which permitted all station signals to be electrically referenced to a single-point (see Figure 2-17). The old signal ground system was made up of the following sub-sections:

a. Signal Ground Point. The signal ground point was the single point to which the RED and BLACK signal ground conductors (installed throughout controlled access areas) were connected.

b. Signal Ground Reference Point. In large facilities, several LEA's may have required multiple RED/BLACK signal ground conductor feeders and connections to the signal ground point. To reduce the number of connections to the actual signal ground point, a signal ground reference point may be established to provide flexibility within the confines of the CAA or LEA for a facility containing multiple LEA's. A single signal ground reference point may have been used for both RED and BlACK conductors, however in many instances separate RED and BLACK signal ground reference points may also have been used. They should have been located at a point central to all LEA's within a CAA or LEA. The location of the signal ground reference point should have also been planned to provide the most direct connection to the signal ground point or earth electrode subsystem.

c. Signal Ground Plane. A ground focal point for connection of the nonferrous shields and the common of power supplies was usually a copper bus insulated from, but installed in, on, or near the Main Distribution Frame (MDF), Intermediate Distribution Frame (IDF), or RED Intermediate Distribution Frame (RED IDF). The signal ground plane would be connected to the signal ground point, or signal ground reference point via a heavy, insulated wire (signal ground conductor) which was installed in metallic distribution facilities, and was at least 1/0 AWG. Signal ground planes regardless of system designation (RED, BLACK), were not directly interconnected to each other via signal ground conductors. The signal ground planes were common to each other only at the point where the separate RED and BLACK signal ground conductors ultimately made connection to the signal ground point or signal ground reference point.

d. Signal Ground Reference Plane. A common connection point was established to terminate either RED or BLACK (not both together) equipment circuitry such as digital communication equipment or digital terminal equipment. The signal ground reference plane was isolated from the ac protection ground or grounding conductor or bus. When used, signal ground reference planes were connected to the nearest appropriate signal ground plane.

e. Signal Ground Bus. A ground bus found in the MDF, IDF, or CDF served as the ground system connection point for the nonferrous shields of the signal and control cables. The shield ground bus was established and installed behind all vertical and horizontal terminal blocks in the distribution frames. The shield ground bus system was made up of rows of strapped (#22 AWG) terminals terminating the nonferrous

shields and an insulated conductor from strapped terminals to the insulated copper ground frame distribution cable behind the vertical and horizontal terminal blocks. The insulated conductor was brazed to the insulated signal ground plane near the distribution frames served. If a jumper wire was used from the distribution cable to the signal ground plane, a minimum of #10 AWG stranded conductor would generally suffice (see Figures 1-67, 1-68, and 2-18).

f. Other Protection Grounds. The signal ground is an earth ground which should be controlled. It is recognized that a ground system contained within a controlled space (CS) is not always possible. In this case other alternatives were considered. Notwithstanding the limitations associated with water pipes, they were however used as a single ground point. Another somewhat acceptable ground point was the case of the old cryptographic equipment (see Figures 2-19 and 2-20) which did not have any means to attach a ground feeder conductor to the equipment case. As noted in Figure 2-19A, the green wire ground connection in the power panel serving the cryptographic units was sometimes used.

2.4.5 Signal Filter Ground. To minimize the degradation of filter insertion-loss characteristics due to a nonzero impedance between the filter case and earth ground, filters were mounted directly on a ground reference plane. This ground plane was in turn connected to the signal ground point. If the filters could not be mounted on a ground plane or an equipment chassis (which effectively provides a ground plane), extreme care was taken to provide an adequate case ground. It was recommended that the case of the filter input utilize shielded cable and that it be connected to the filter via a coaxial type connection with the shield tied to the case via the connector shell (not via a pigtail). Additionally, a heavy braided ground strap was installed to connect the filter case to the ground point.

2.4.6 Grounding Precautions. Whenever possible, inadvertent contact to fortuitous conductors in walls or floors which did not have an adjacent CAA was avoided when installing equipment, cabinets, racks, or ducts. Moreover, insulators were not utilized unless specifically required, and then only on a case–by-case basis. All components of the station signal ground distribution system were contained within a CAA or controlled space. It has been the responsibility of the operating activity to ensure, by periodic inspections, that all areas of the signal ground system installed in the controlled space meet good engineering practices.

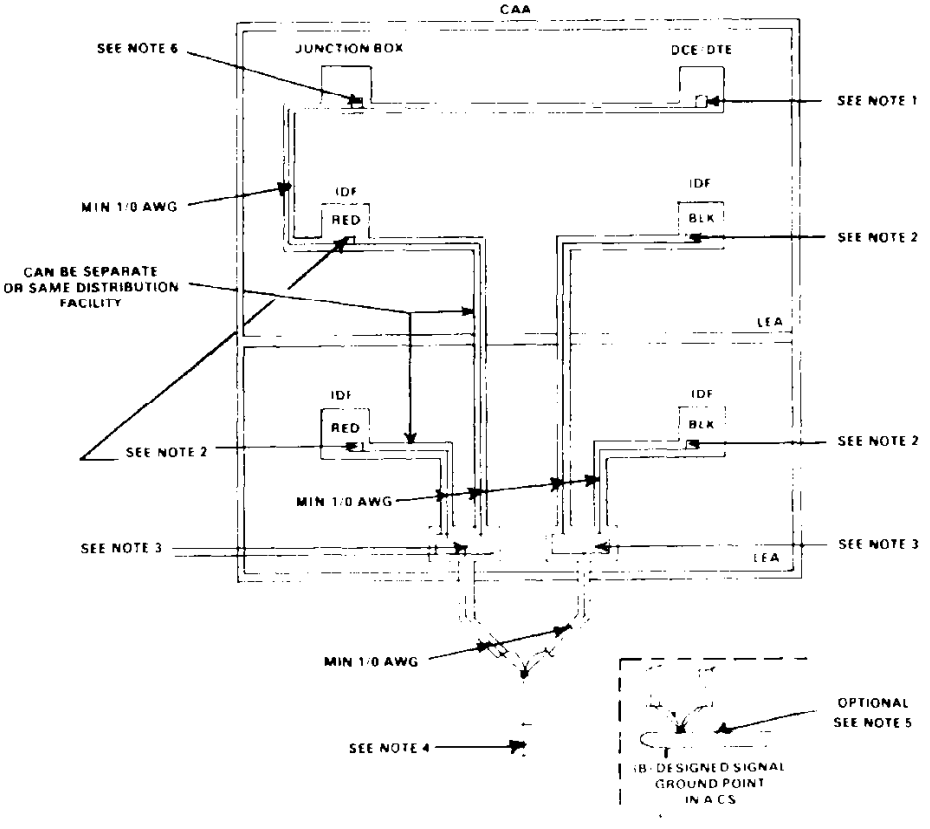

NOTES
1. SIGNAL GROUND REFERENCE PLANE
2. SIGNAL GROUND PLANE OR BUS
3. SIGNAL GROUND REFERENCE POINT
4. COMMONLY USED GROUNDING TECHNIQUES
5. METALLIC WATER PIPE
6. AN INTERMEDIATE SIGNAL GROUND PLANE

Figure 2-17. Typical Multiple Area Ground Distribution (OLD RED/BLACK CRITERIA)

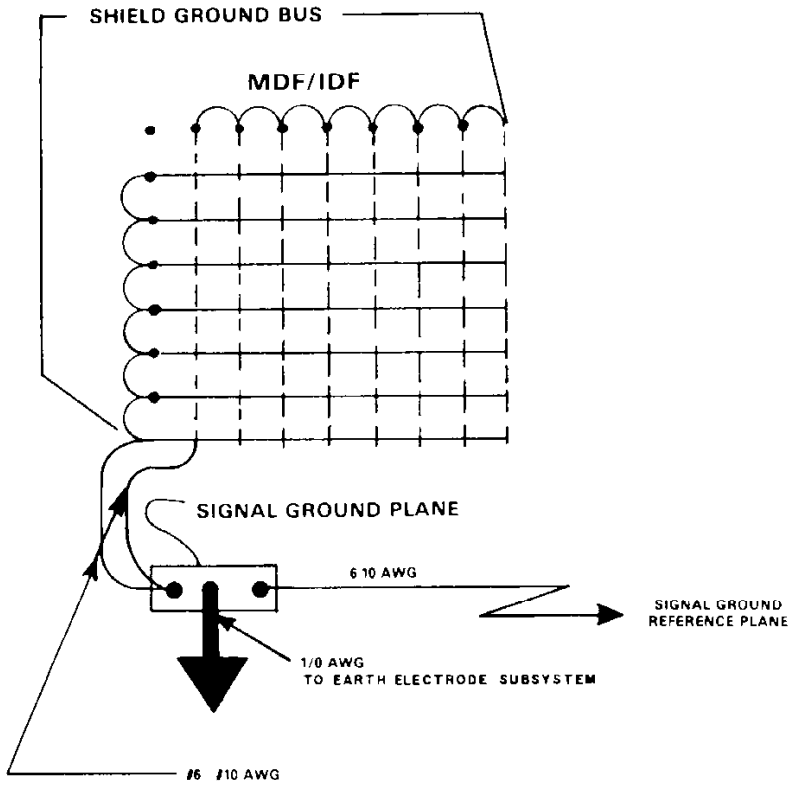

Figure 2-18. Typical Signal, Shield Ground, Bus Distribution System for Single-Point Ground (OLD RED/BLACK CRITERIA)

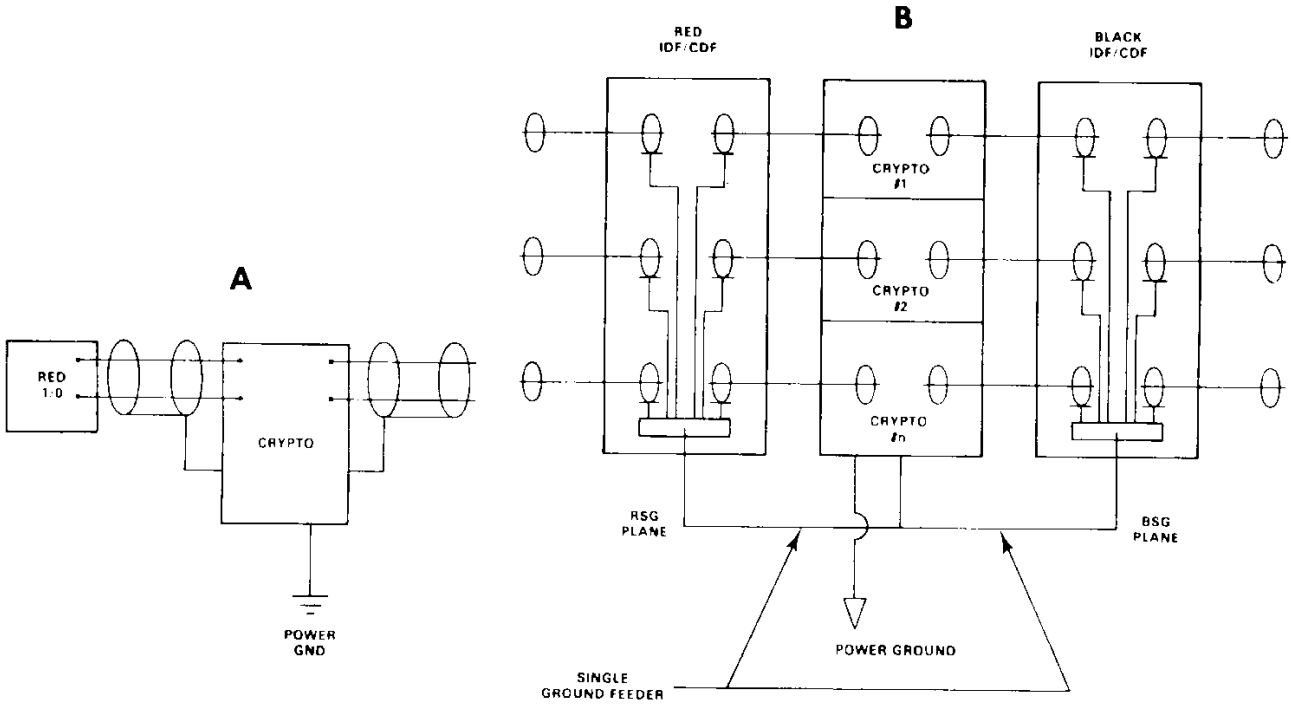

Figure 2-19. Crypto Equipment Grounds (OLD RED/BLACK CRITERIA)

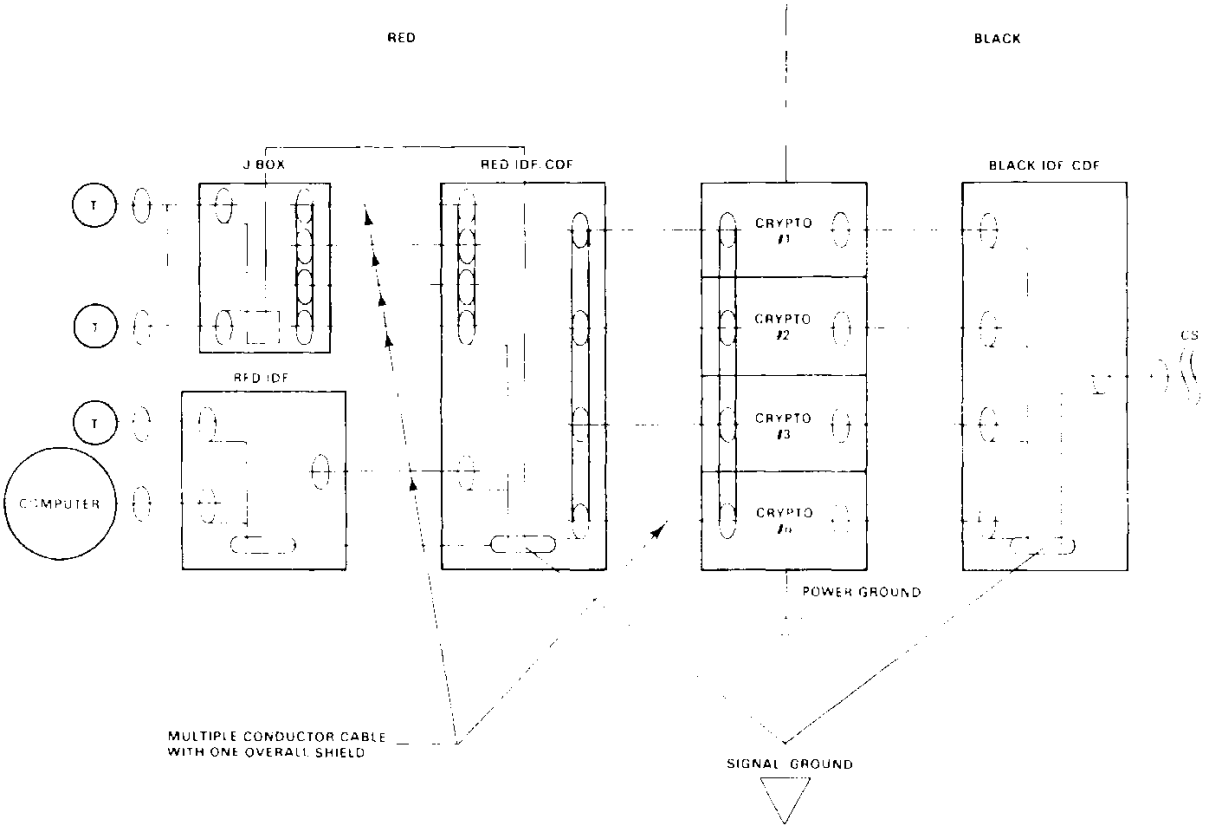

Figure 2-20. Typical Facility Ground System (OLD RED/BLACK CRITERIA)

CHAPTER 3

DESIGN CRITERIA

3.1 INTRODUCTION.

This chapter presents recommended grounding, bonding, and shielding practices for use in equipment design and construction at levels of implementation ranging from circuit board design to installation in the cabinets. Also presented is a set of inspection and test procedures for verifying that proper grounding, bonding, and shielding practices have been employed in the design and construction of the equipment. The design of the equipment should emphasize careful grounding, bonding, and shielding along with other interference and noise control measures in order to achieve compatible operation within the electronic system in which it is installed. This emphasis must continue to be maintained during the manufacture, installation, and operation of the equipment or system. For example, during manufacture, careful attention should be given to the routing of cables, the choice and mounting of cable connectors, the selection of signal and ground conductors, the correct implementation of all bonds within the equipment, etc. When the piece of equipment is installed, the configuration of the facility ground networks (for a detailed description of these networks, see Section 1.5) and the integrity of the shields within the facility must be maintained. Correspondingly, the ground networks and shields in the facility should not be allowed to degrade during the operation of equipments. For example, ground connections should not be randomly changed in efforts to improve equipment operation without considering what effect such changes will have on the overall system. This recommendation applies to changes internal to the equipment as strongly as it applies to changes made external to the equipment.

Basic personnel protection measures should also be incorporated. Inadvertent contact with metal parts operating at hazardous voltages must be prevented. Likewise, exposure to harmful emissions of either the ionizing or nonionizing type must be avoided by the provision of appropriate shields or barriers. In addition, protection must be provided against internal power line faults through the installation of grounding conductors of adequate size and the incorporation of appropriately sized fuses or circuit breakers into the design. Overvoltage and overcurrent protection should be provided on power lines, signal lines, and control lines. A variety of measures may be used singly or in combination to provide the needed protection. Efficient grounding, bonding, and shielding in accordance with the recommendations set forth in the following sections are important factors in the achievement of this protection.

3.2 GROUNDING PROCEDURES.

3.2.1 Signal Grounds.

Grounding in equipment must be given the same careful attention as is given to amplifier design, filter selection, component selection, and mechanical layout. In equipment, the signal grounding philosophy presented in Volume 1, Chapter 5 and the practices recommended in Chapter 1 of this volume for facilities are to be applied on a smaller scale. The grounding techniques and practices used in the design of the equipment must ensure that the signal reference points or planes internal to the equipment can be properly interfaced with those of other equipments and those of the facility as a whole without compromising the signal ground system of either the individual unit or the total system.

A basic signal ground point or plane is an important requirement for reliable, interference-free equipment operation. Unfortunately, the ideal ground plane does not exist and some difference of potential will always exist between different ground points. The following sections present techniques and procedures for minimizing this potential difference in both lower and higher frequency equipments.

3.2.1.1 Lower Frequency Equipment.

3.2.1.1.1 Signal Ground Network Configuration. Equipment shall be manufactured with a single-point, signal ground network in lower frequency equipments, i.e., equipment operating at 30 kHz or less. Isolate the lower frequency signal reference points and planes established internal to the equipment from the equipment case.* (The functional requirements of the internal circuitry of the equipment will determine the actual methods and techniques which must be used in establishing the individual reference points and planes. Because of the wide variability of design requirements, the final selection must be left to the individual designer. The designer should become thoroughly familiar with the fundamental design principles contained in Volume I, Chapters 5 and b.)

3.2.1.1.2 Signal Ground Terminals.

a. Equipment shall be manufactured with an insulated signal ground terminal on each equipment case as illustrated by Figure 3-1 to provide a path for interconnecting the signal reference inside the equipment to the facility lower frequency ground network.

b. The ground terminals can be a pin in a connector, a screw or pin on a terminal strip, an insulated wire or an insulated stud, a jack, or a feedthrough. If an insulated wire is used, it should be at least No. 16 AWG copper or larger to provide adequate mechanical strength; for No. 16 AWG, its length should not exceed 1.5 meters (5 feet). If a longer ground wire is required in order to connect to the lower frequency signal ground network in the facility, the size of this wire should be increased. To determine the necessary wire size, first compute its required cross-sectional area from:

Required area in circular roils = Length required in running feet x 500 cmil per foot.

Using either Table 5-1 in Volume I or a standard wire table, determine the standard AWG size having the required (or larger) cross-sectional area. For example, assume the required wire length is 3 meters (10 feet). The minimum necessary cross-sectional area is then

10 ft x 500 cmil/ft = 5000 cmil.

*Common battery systems typically are designed with the signal ground connected to chassis or cabinet ground which is also connected to one of the dc supply buses. It is recommended that such systems be isolated from the structure and from the racks and cabinets of other lower frequency equipments and systems. All interfaces between common battery systems and other equipments and systems should be balanced. Shield grounding must be controlled to ensure that the desired isolation be maintained.

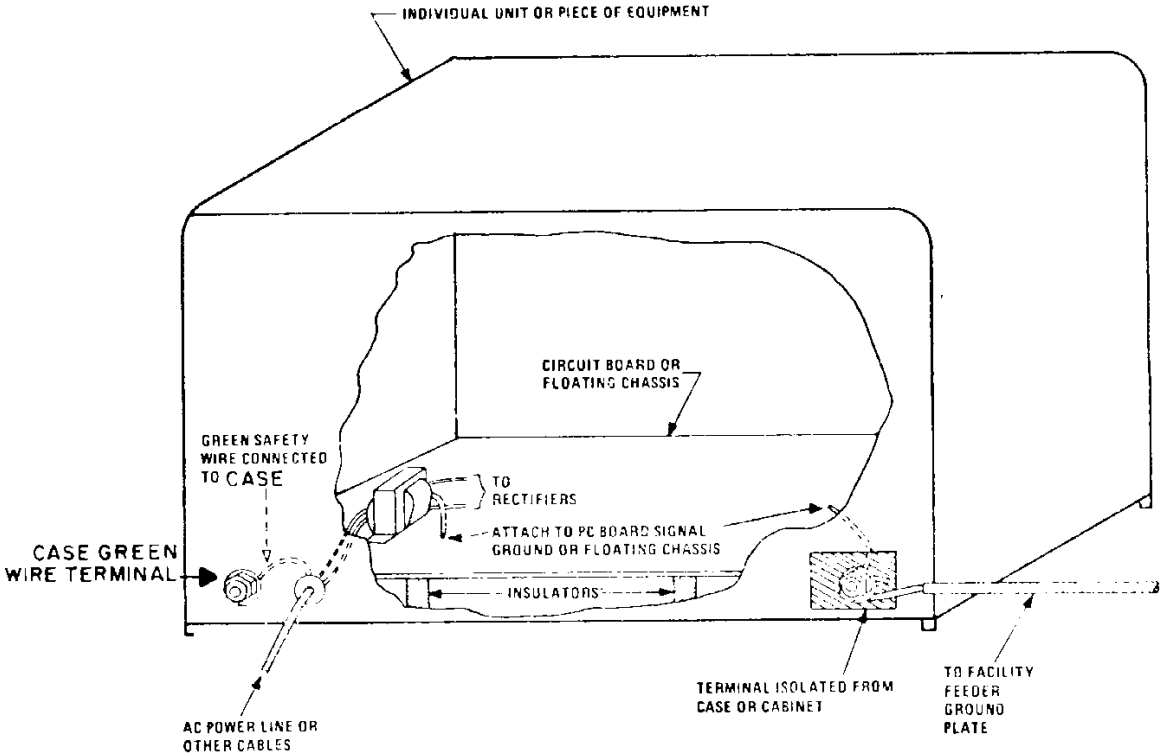

Figure 3-1. Grounding in Lower Frequency Equipment

The wire tables show that No. 13 AWG wire has a cross-sectional area of 5,178 circular roils and could be used. However, No. 12 AWG is more commonly available and would probably be used instead.

c. Where an insulated ground wire penetrates a metal sheet such as the equipment case, adequate physical protection must be provided with grommets, plastic sleeves, or other protectors to ensure continuous isolation between the floating chassis and the equipment case or cabinet.

3.2.1.1.3 Color Code. To aid in distinguishing the signal ground terminal from other terminals on the equipment, it should be clearly marked with a permanent yellow label or color code.

3.2.1.1.4 Cabinet Bus Bar.

a. Each rack or cabinet containing two or more separate pieces of lower frequency equipment should have a bus ground installed that is insulated from the rack or cabinet.

b. Connect the signal ground terminal of each unit of equipment with a bonding jumper to the signal ground bus bar in the manner illustrated in Figure 3-2. To provide adequate mechanical strength and a low impedance path, a broad, fiat copper or aluminum strap should be used between the signal ground bus bar and the signal ground terminal on each unit of equipment. A copper wire, No. 16 AWG or larger, may also be used. This bonding juniper must be insulated or otherwise kept from contacting either the equipment case, the rack or the cabinet.

3.2.1.1.5 Isolation.

a. The signal ground network in lower frequency equipments must be designed and installed to provide complete electrical isolation between this ground network and the equipment case (see Figure 3-l). For example, the signal grounds on printed circuit boards must not be connected to the chassis. On the other hand, if the designer determines that the metal chassis can be used as a signal reference for the lower frequency circuits without creating interference problems, and it is desirable to do so, the chassis then must be floated from the equipment case through the use of insulating spacers or standoffs. Care must be exercised in the mechanical layout of the equipment to insure that screws and fasteners do not compromise this isolation.

b. Controls, readout and indicating devices, fuses and surge protectors, monitoring jacks, and signal connectors must be installed in ways that do not compromise this isolation. Both sides of the ac power line must be isolated from the lower frequency signal ground and from the equipment case. only transformer-type power supplies should be used; the commercial ac/dc practice should never be used. The metal portions of equipments exposed to human contact must be grounded with the green safety wire.

c. To verify that this isolation is maintained, measure the resistance between the equipment's ground terminal and the case, between the rack ground bus and the rack frame, and between each side of the ac power line and the equipment case. Each of these measurements should show a high (> 1 megohm) resistance. Before making these tests, be sure power lines are not connected and all interfacing cables are disconnected.

3.2.1.1.6 Signal Interfacing.

a. The preferred method of interfacing lower frequency equipments is to use balanced lines. All signal inputs and outputs should be balanced with respect to the signal ground; the signal paths between such equipments should employ balanced, shielded, twisted pair lines in the manner illustrated in Figure 3-3. The twisting should be as tight as feasible with 18 twists per foot (3-1), the desired goal for small wires.

b. Where unbalanced signal lines must be used, the signal return must be grounded at one end or the other, but not both (see Figure 3-4). (Deciding in advance to ground the signal line at only the source (the driving end) or the load (the receiving end) generally leads to implementation problems in complex installations. For example, some equipment will be the load for one signal circuit while being, at the same time, the source for another load as shown in Figure 3-5. In this case, if each line is grounded at the source or at the load, the single-point ground will be compromised. Most modern electronic installations are so complex and widely distributed that even if unbalanced interfaces could be implemented which did not violate the lower frequency signal ground network in the facility, it is improbable that the single-point ground system could be maintained during future equipment additions and modifications.) As a result, the equipment must be designed to have the capability of isolating from ground at either the source or load.

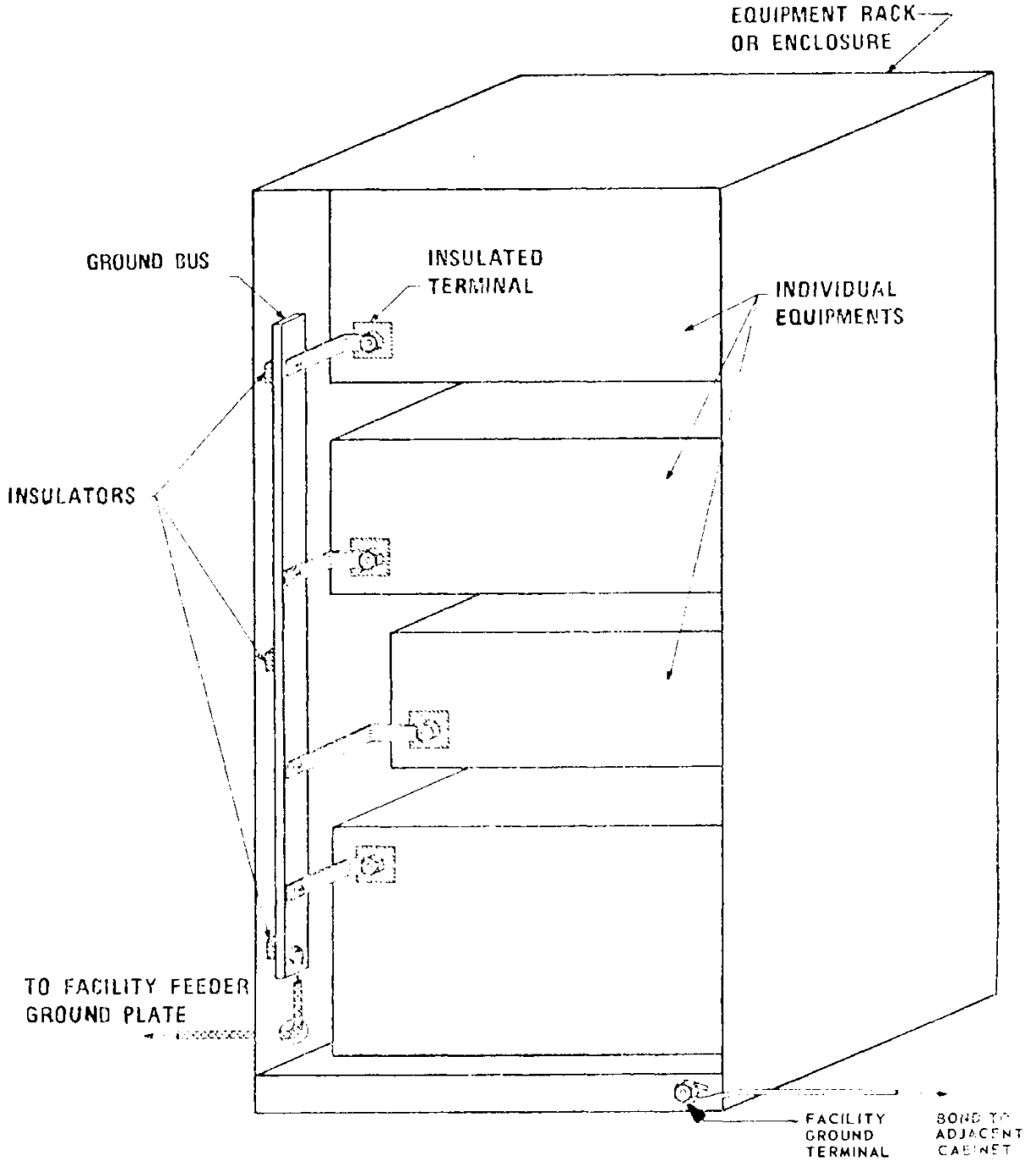

Figure 3-2. Lower Frequency Signal Ground Bus Bar Installation in Rack or Cabinet

3.2.1.1.7 Shield Grounding (Black Only).

a. The shields of lower frequency signal lines should be grounded at only one end to the signal ground network internal to the equipment as shown in Figure 3-3. The ground connection may be made at either the source or the load end (3-2), (3-3), (3-4). In general,

(1) shields of sensitive data lines should be grounded at the load end;

(2) shields of high level* signal lines should be grounded at the source end; and

(3) shields on lines from high impedance dc sources such as strain gauges, thermocouples, etc., should be grounded at the source end (3-5). (Further details on shield grounding for data acquisition systems are given in Section 3.5.2.)

b. All individual shields of lower frequency signal lines within a cable bundle must be insulated from each other to minimize cross coupling. Further, these individual shields must be isolated from the overall bundle shield, equipment chassis and enclosures, junction boxes, conduit, cable trays, and all other elements of the facility ground system. When cables are long, extra attention must be directed toward maintaining the isolation of the individual shields at the ungrounded end and at all intermediate connectors throughout the cable run.

c. At terminating equipments, the shields of individual lower frequency signal lines may be carried into the case or cabinet on separate pins or may be grounded together to be carried in (or out) on a common connector pin, depending upon the characteristics of the equipment involved. If the common pin arrangement is used, it must not compromise the single-point grounding principle. It is advisable to use one pin for low level signal shields with a different pin used for high level signal lines. These individual shields should be terminated to the lower frequency signal ground network. See g through i below for overall shield grounding.

d. The pigtail between the shield breakout and the connector pin should be as short as physically practical.

e. In multi conductor cables seine of the individually shielded signal lines will be grounded at one end while other shields will be grounded at the other end. Careful attention must be given to the installation of such cables to prevent grounding of shields at both ends.

f. If pickup or radiation problems arise because the shield is longer than $\lambda/10$ at critical frequencies (see Volume I, Section 6.2.2.4), the shield may be divided into segments in the manner illustrated in Figure 3-6. Each shielded section should be grounded at one end only.

---

* High level versus low level is a matter of degree and will depend upon the characteristics of the particular system under consideration. A suggested rule of thumb is that if the voltage levels of two signals differ by a factor greater than 10 to 1, then the larger should be treated as high level relative to the smaller.

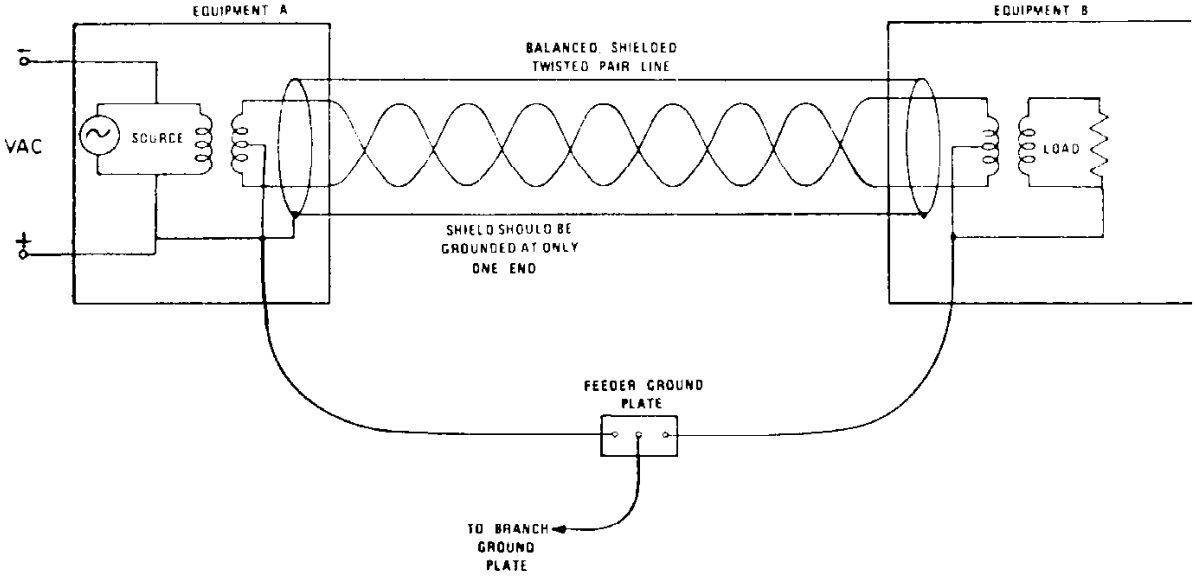

(a) COMMON BATTERY SYSTEM

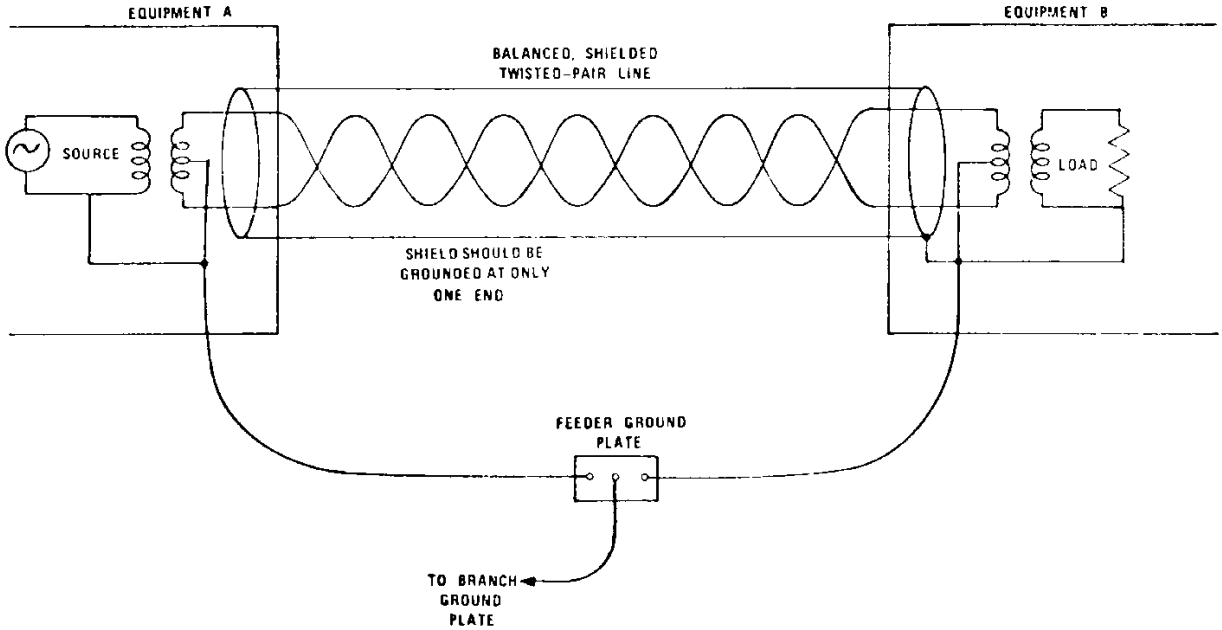

(b) CONVENTIONAL SYSTEM

Figure 3-3. Use of Balanced Lines to Avoid Ground Loops

g. Multiconductor cables which contain unshielded or individually shielded wires, or both, frequently have an overall shield provided for both physical protection and to provide supplemental electromagnetic shielding. Such overall shields should be grounded at each end of the cable run to provide a continuous rf shield with no breaks.

h. For long cable runs where the cable is routed through one or more intermediate connectors, the overall shield should be grounded to the frame or case of junction boxes, patch panels, and distribution boxes along the cable run.

i. For maximum shielding effectiveness, the overall shield should be effectively bonded as shown in Figures 3-7 and 3-8 with a low impedance connection to the equipment case, enclosure wall, or other penetrated (metal) shield. The best way to bond the overall shield to a connector is to run the shield well inside the connector shell and provide clean metal-to-metal circumferential contact between the shield and the shell. If the connector is not involved, shortest practical lengths of connecting strap or jumper should be used.

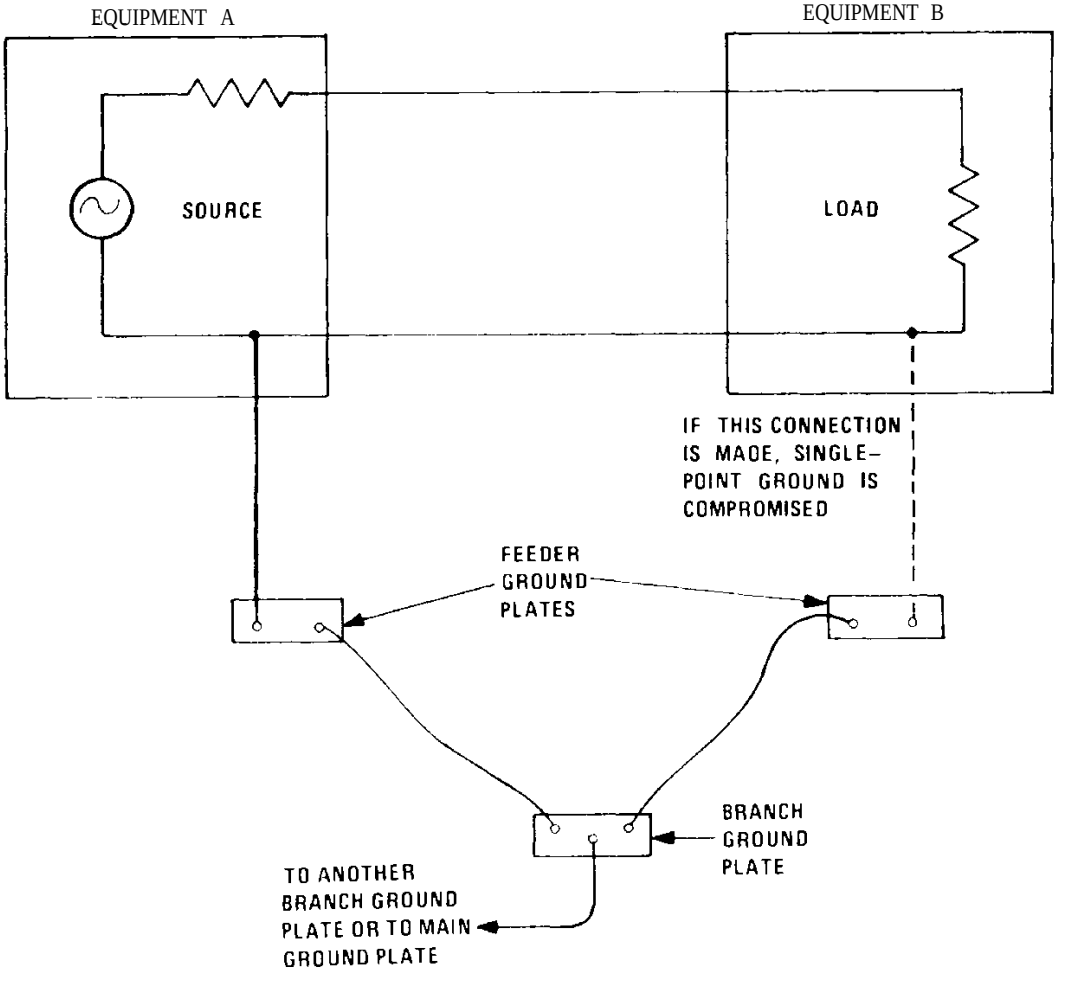

Figure 3-4. Effect of an Unbalanced Cable on the Single-Point Ground

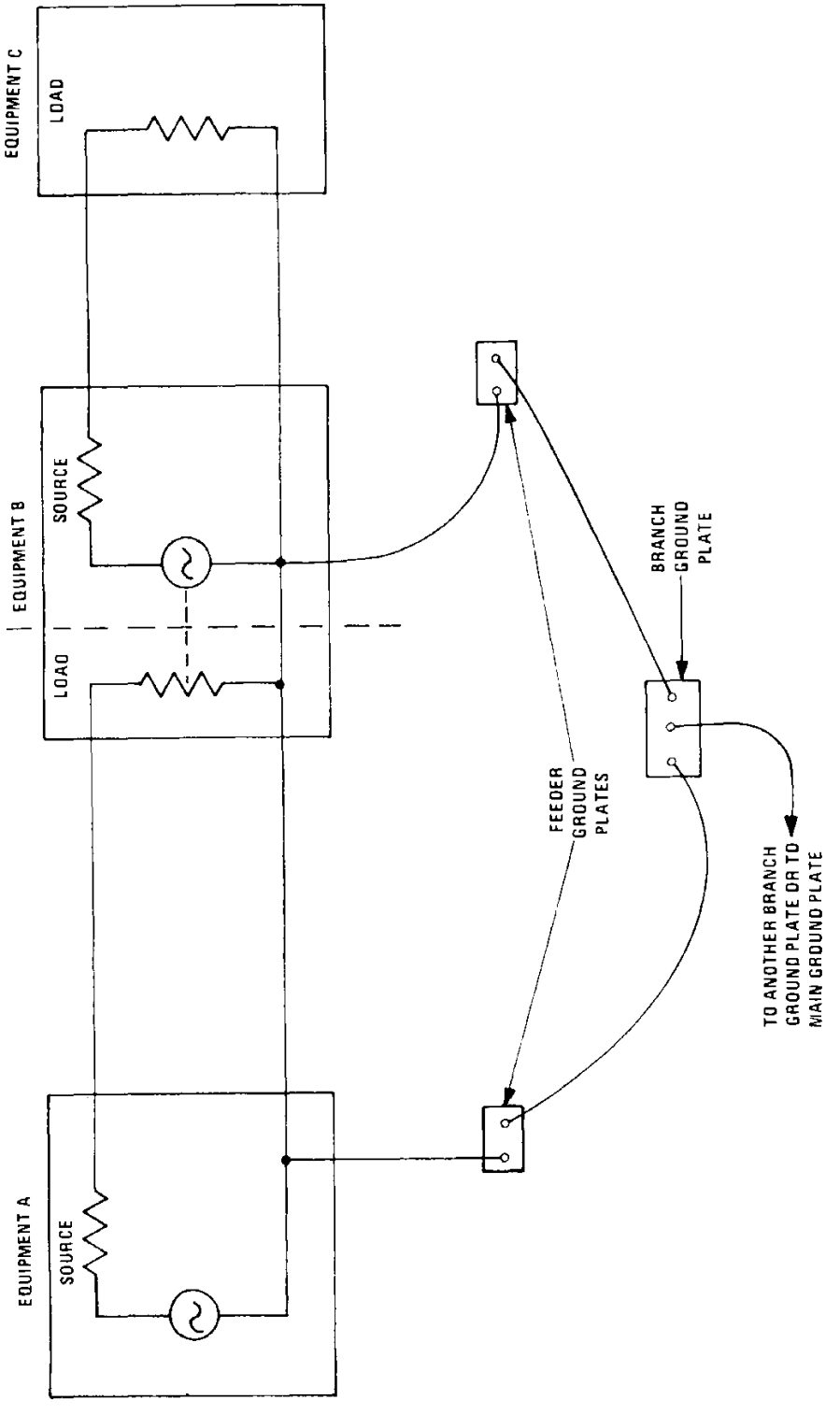

Figure 3-5. Effect of Arbitrarily Grounding the Source End of Unbalanced Equipment Interconnecting Cables

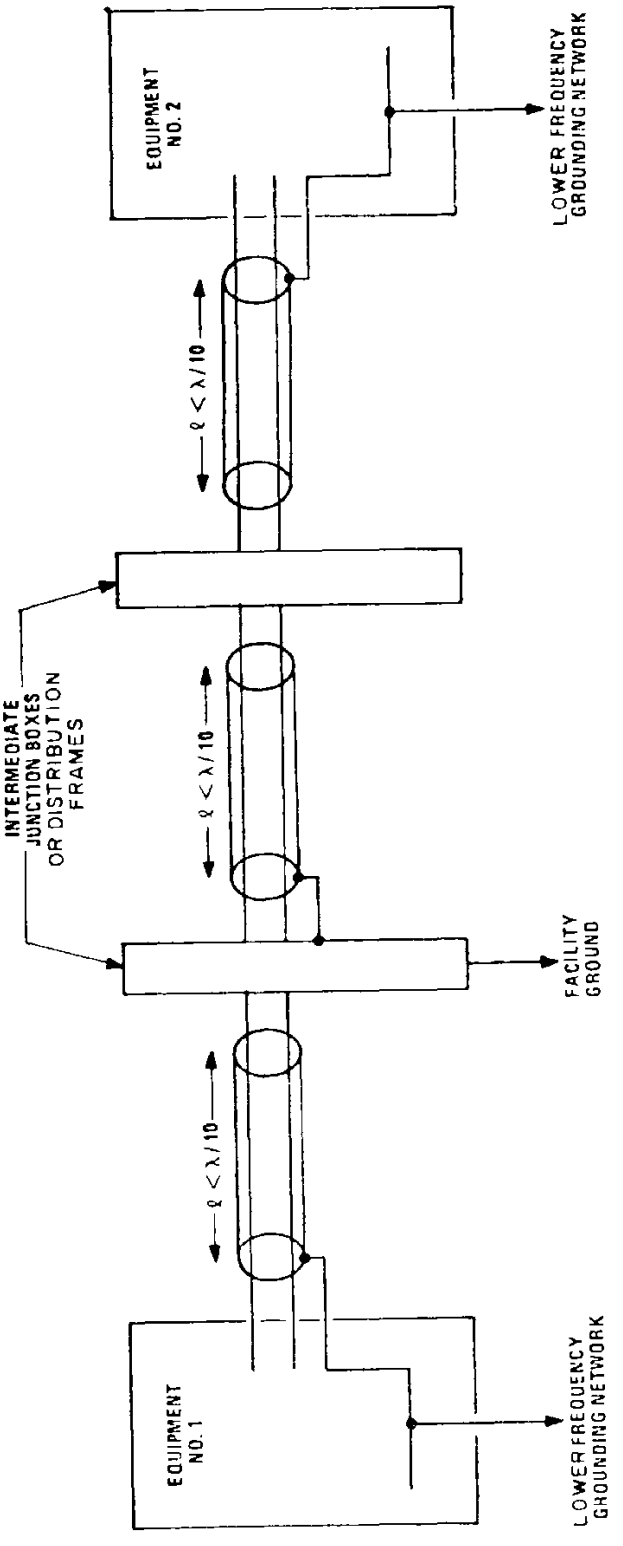

NOTE: Individual shields may be grounded at either end.

Figure 3-6. Method of Grounding the Individual Shields on Long Lower Frequency Shield Cables

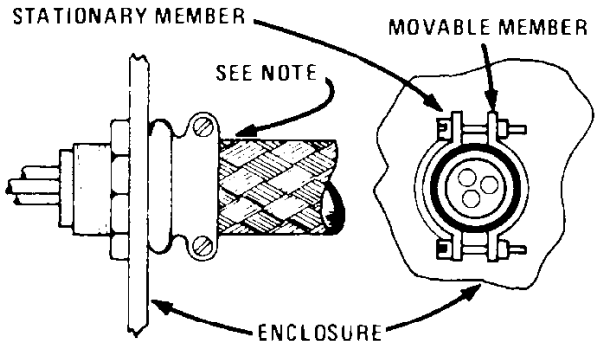

(a) BOX CONNECTOR

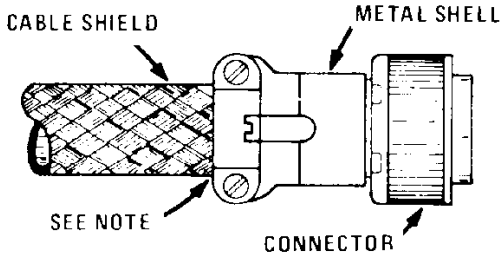

(b) GROUNDING OF MULTI-PIN CONNECTOR

NOTE: INSURE THAT CABLE SHIELD IS CLEAN AND THAT SECURING CLAMP IS TIGHTENED TO PROVIDE A GOOO GROUND.

Figure 3-7. Grounding of Overall Cable Shields to Connectors

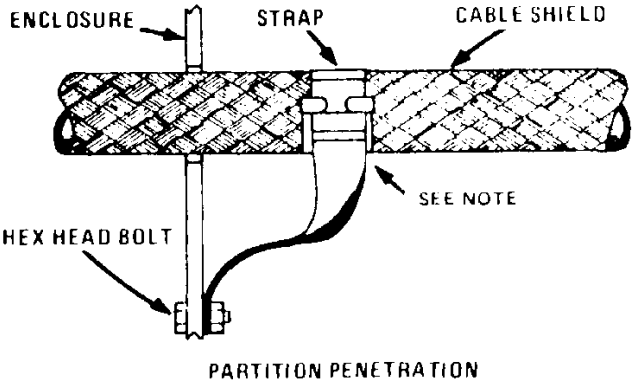

NOTE: INSURE THAT CABLESHIELD IS CLEAN AND THAT SECURING CLAMP IS TIGHTENED TO PROVIDE A GOOD GROUND.

Figure 3-8. Grounding of Overall Cable Shields to Penetrated Walls

3.2.1.2 Higher Frequency Equipment. In higher frequency equipments, multiple-point equipotential grounding is required. The various signal pairs internal to the equipment are referenced as required to a metallic common or equipotential ground plane with minimum length conductors. The equipment chassis is normally used as the signal reference plane. The equipment chassis is grounded through tile case or cabinet to the equipotential ground plane. Yellow covered wire or cable of adequate size should be employed for all interconnections of the higher frequency signal reference network.

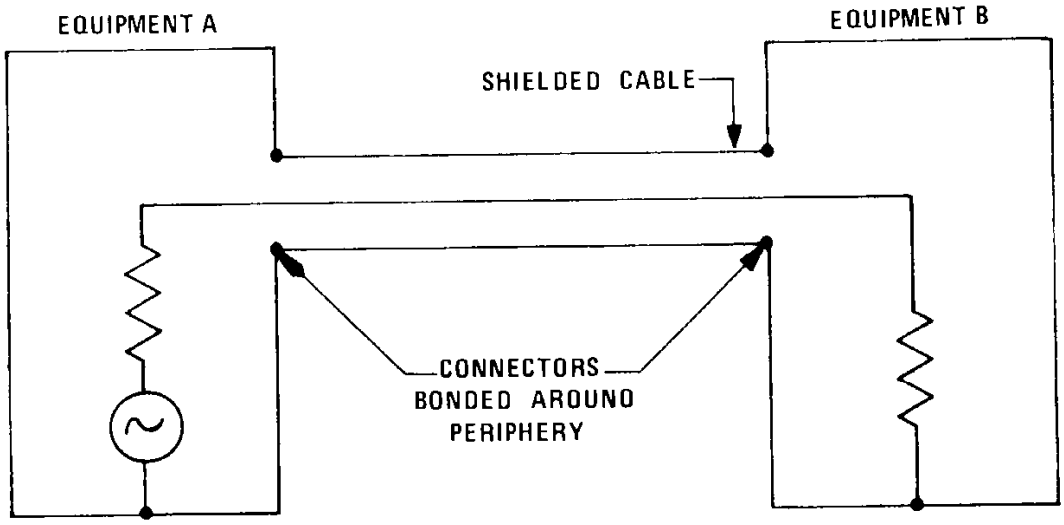

Figure 3-9. Establishment of Shield Continuity Between Higher Frequency Equipments

3.2.1.2.1 Signal Interfaces. For higher frequency signals, the interfacing lines between equipments may be unbalanced, constant impedance, transmission lines such as coaxial cables. The current return conductor, e.g., the shield in the case of a standard coaxial cable, * should be grounded to the equipment enclosure at both ends of the cable and at intermediate points along the cable run. (This multiple-point grounding of the shield maintains the rf shielding effectiveness of the cables and simplifies equipment design.)

3.2.1.2.2 Cable Connectors. Cable connectors must have less than one milliohm contact resistance to provide a low impedance path between the cable shield and the equipment case on which the connector is mounted. Bond the shield completely around its periphery of the cable to the connector shell with a tight compression or soldered bond. Soldered connections are preferred over clamps. Higher frequency shield terminations must maintain the rf-tightness of the interconnected system (see Figure 3-9).

*In low level, wideband (particularly video) systems, noise voltages arising from stray power currents (or from currents induced in cable shields by incident rf fields, i.e., the antenna effect), flowing through the cable shield can be troublesome. A way to combat the rf pickup problem is to, in effect, enclose the shield carrying the signal return current inside of another shield or use a balanced type of transmission line. To accomplish the first of these alternatives, either a triaxial type cable can be used or the coaxial cable can be routed in metallic conduit. The inner shield of the triaxial cable or the shield of the conduit-protected coaxial cable should be terminated to the signal ground on the inside of the equipment. The outer shield of the triaxial cable and the conduit should be peripherally bonded to the case or cabinet of the terminating equipments. If the interference is the result of stray power currents, the current path through the shield must be interrupted or a twinaxial type of cable must be used. To interrupt the path for stray power currents, the system's signal reference must be connected to structure at only one end. Thus, either the source or load end signal reference must be isolated from structure and the ac ground. The isolation can be effected either by floating the equipment or its internal circuitry. Generally, however, either process is very difficult to implement and maintain and it is preferable to resort to a balanced interface or locate the source and reduce the magnitude of the stray current.

3.2.1.3 Equipments Containing Both Lower and Higher Frequency Circuit. Some types of equipment will necessarily contain both lower and higher frequency signal circuits in the same equipment case because of specific design or operational requirements. (For example, a typical VHF or UHF receiver will require both a higher frequency input from the antenna and a lower frequency output to audio or IF amplifiers as illustrated in Figure 3-10.) If the lower and higher frequency circuits are functionally independent and can be separated, the lower frequency signal ground should be designed and installed in accordance with Section 3.2.1.1 and the higher frequency signal grounds should conform to Section 3.2.1.2.* However, in equipments where both lower and higher frequency circuits must share a common signal ground because of design or construction requirements, both signal circuits should be grounded as in higher frequency equipments. The higher frequency interfaces to all transitional type equipment should be constant impedance, shielded lines with the shield grounded around its periphery to the chassis or cabinet. The lower frequency interfaces may be shieldled, and should be balanced, twisted pair lines, as illustrated in Figure 3-10, with the shield grounded at one end only.

3.2.2 Fault Protection. Connect each unit or piece of electrical and electronic equipment and all exposed conductive parts to other nearby conductive objects, such as the building structural steel, to prevent hazardous voltages from existing on the equipment relative to its surroundings. Also, ground each equipment to the earth electrode subsystem through a low impedance path to provide a return path for fault currents back to the ac distribution transformer.

a. Ground exposed noncurrent-carrying metal parts of electrical and electronic equipment for fault protection in accordance with the requirements of MIL-STD-188-124A.

b. Convenience outlets which are provided as an integral part of a piece of equipment must be grounded in accordance with the NEC. Connect the ground terminal of the receptacle in such outlets to the equipment case, racks, or cabinet in which the outlet is mounted with a ground conductor equal in size to the green wire specified by the NEC. (This ground conductor is to be installed in addition to any grounding connection made by the yoke of the receptacle.)

c. The ground terminal of all convenience outlets and plugmolds provided with the equipment or equipment cabinet shall be connected to the fault protection subsystem via the grounding (green) wire. In addition, the green wire shall be connected to the equipment case and rack. The size of the conductor shall be in accordance with Table 1-21 or Article 250 of the National Electrical Code. Wire mold or plugmold strips and convenience outlets which depend upon serrated fingers for ground shall not be used.

d. Accessible conductive extensions fro-n each equipment must be grounded to the equipment case to prevent such parts from becoming electrically energized in case of a power line fault or component failure. For example, metal control shafts must be grounded with close-fitting gaskets, with metal finger stock, or through the mounting hardware.

---

*At facilities where lower frequency equipments are installed over the equipotential plane, the single-point ground should be connected to the equipotential plane.

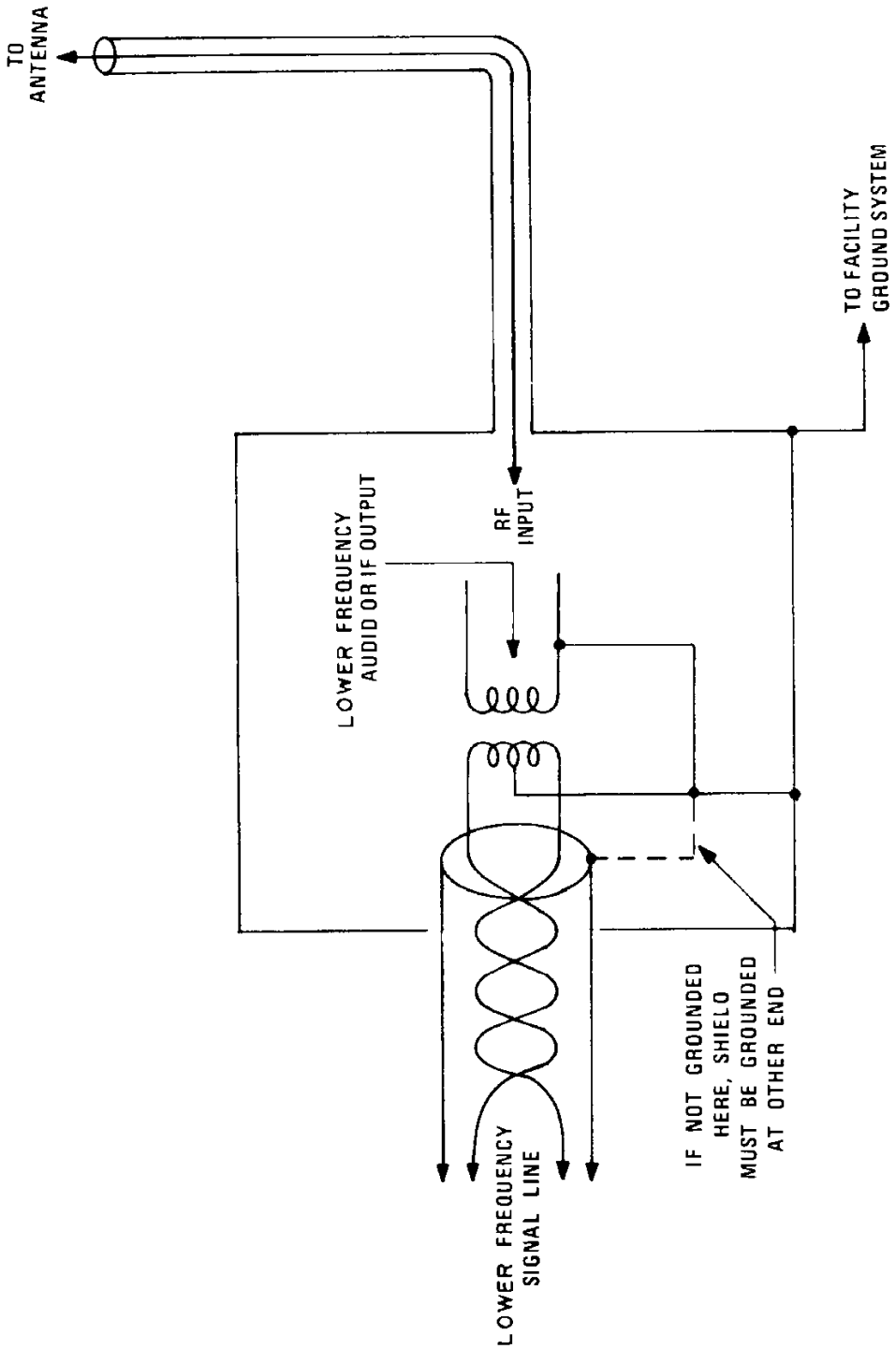

Figure 3-10. Grounding Practices in Equipments Containing Both Higher Frequency and Lower Frequency Circuits

e. The ac neutral, i.e., the white wire, must not be connected to any noncurrent-carrying metal parts of the equipment. (This restriction means that the use of ac/dc type of power circuit design is prohibited and that a power transformer is required for each equipment or subsystem.)

3.2.3 Cabinet Grounding. The case or cabinet of each individual unit or piece of equipment must be electrically bonded to the cases of other nearby equipments and to the nearby equipotential plane or fault protection subsystem to minimize noise voltages produced by stray currents.

a. Each unit or piece of equipment that is not rack mounted should have its case or enclosure connected to the nearest point on the equipment ground network with a low resistance ground cable. To ensure that this ground cable has a sufficiently low resistance, the size of the ground cable should provide at least 2000 cmil per running foot. To determine the necessary wire size, first compute its required cross-sectional area from:

Required area in circular mils = Run length in feet x 2000 cmil per foot.

Using either Table 5-1 in Volume I or a standard wire table, determine the standard AWG size having the required (or larger) cross-sectional area. For example, assume the run length is 20 feet. The minimum necessary cross-sectional area is then

20 ft x 2000 cmil/ft = 40,000 cmil.

The wire tables show that a No. 4 AWG wire has a cross-sectional area of 41,740 circular mils and should be used for a run of 20 feet.

b. If the equipment is mounted in a rack, frame, or cabinet, the equipment case must be directly bonded to the rack, frame, or cabinet in accordance with the recommendations of Section 3.3. The rack, frame, or cabinet must then be grounded to the nearest point on the fault protection subsystem within the facility with a ground conductor providing 2000 cmil per running foot. Figure 3-11 provides a typical equipment cabinet grounding detail.

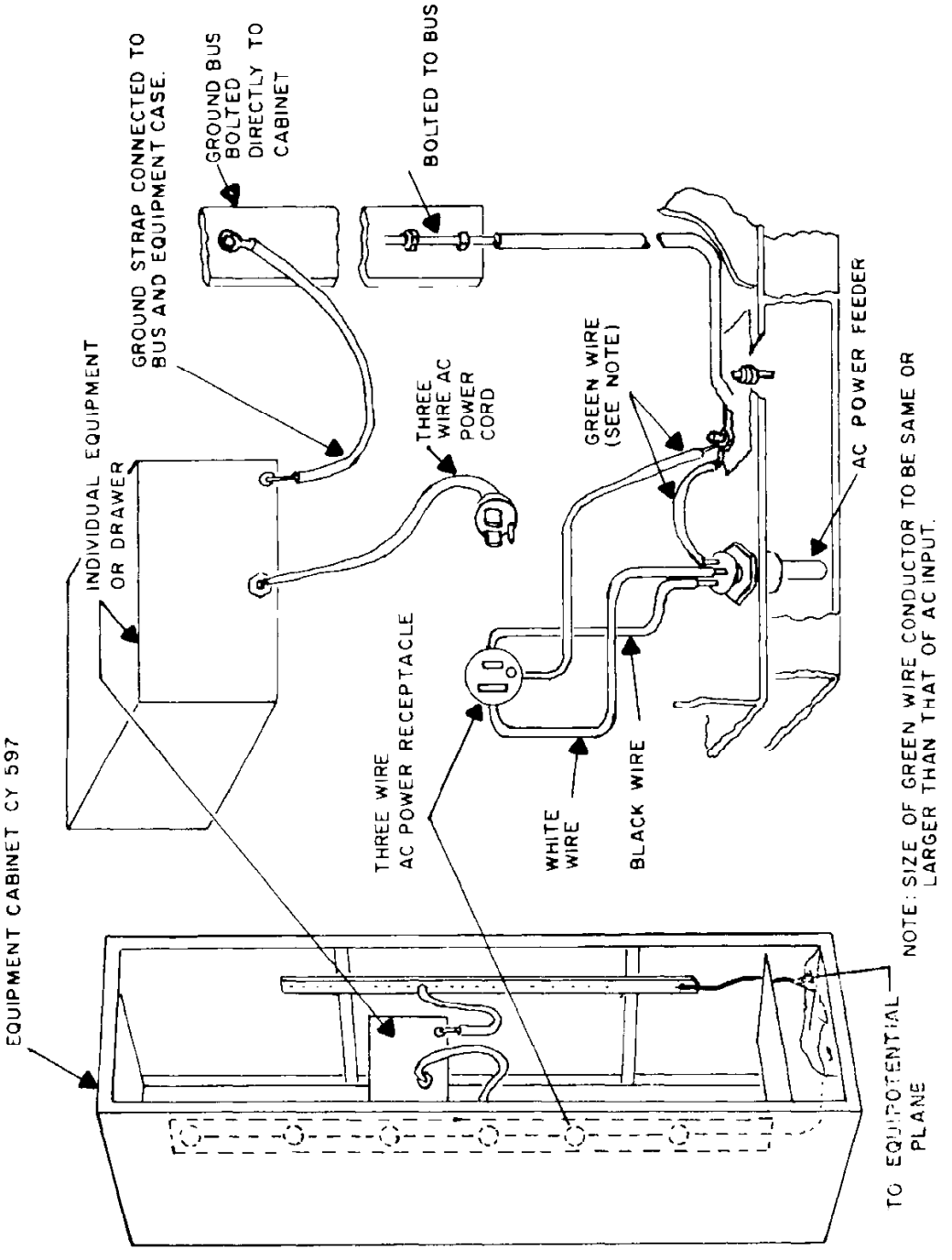

Figure 3-11. Typical Equipment Cabinet Grounding Detail

3.3 BONDING PRACTICES. Equipment emission and susceptibility requirements for proper system operation should be accomplished with the most cost–effective combination of interference reduction techniques. Bonding is an essential element of the interference control effort. This section presents design and construction guidelines to aid in the implementation of effective bonding of equipment circuits, equipment enclosures, and cabling. These guidelines are not intended as step-by-step procedures for meeting EMC specifications. Rather they are aimed at focusing attention on those principles and techniques which lead to increased compatibility between circuits, assemblies, and equipments.

a. Welded seams should be used wherever possible because they are permanent, offer a low impedance bond, and achieve the highest degree of rf tightness.

b. Spot welds may be used where rf tightness is not necessary. Spot welding is less desirable than continuous welding because of the tendency for buckling and the possibility of corrosion occurring between welds.

c. Soldering should not be used where high mechanical strength is required. If mechanical strength is required, the solder should be supplemented with fasteners such as screws or bolts.

d. Solder must not be used to form bonds which may be reasonably expected to carry large currents, such as those produced by power line faults or lightning currents.

e. Fasteners such as bolts, rivets, or screws should not be relied upon to provide the primary current path through a joint.

f. Rivets should be used primarily to provide mechanical strength to soldered bonds.

g. Sheet metal screws should be used only for the fastening of dust covers on equipment or for the attachment of covers to discourage unauthorized access by untrained personnel.

h. Bonds that can not be made through direct metal-to-metal contact must use auxiliary straps or jumpers. The following precautions should be observed when employing bonding straps or jumpers (see Figure 3-12):

(1) Jumpers should be bonded directly to the basic structure rather than through an adjacent part.

(2) Jumpers should not be installed two or more in series.

(3) Jumpers should be as short as possible.

(4) Jumpers should not be fastened with self-tapping screws.

(5) Jumpers should be installed so that vibration or motion will not affect the impedance of the bonding path.

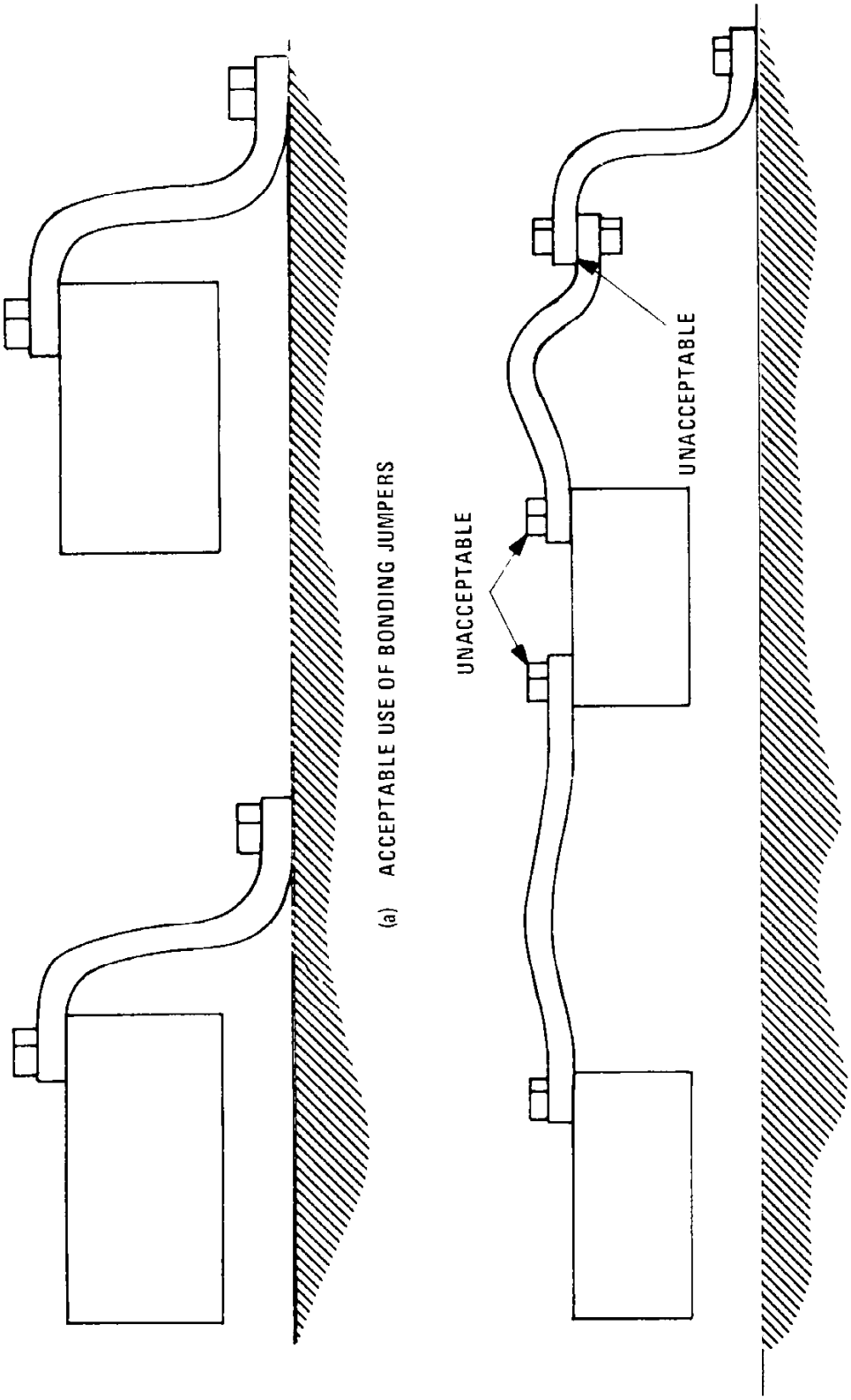

(a) ACCEPTABLE USE OF BONDING JUMPERS

(b) UNACCEPTABLE PRACTICES

Figure 3-12. Acceptable and Unacceptable Uses of Bonding Jumpers

(6) Jumpers should be made of tinned copper, cadmium-plated phosphor bronze, aluminum, or cadmium- plated steel.

(7) Mating metals should be selected to offer maximum galvanic compatibility (see Section 1.7.3).

i. Where electrical continuity across the shock mounts is necessary, bonding jumpers should be installed across each shock mount. Jumpers for this application should have a maximum thickness of 0.06 cm (0.025 In.) so that the damping efficiency of the mount is not impaired. In severe shock and vibration environments, solid straps may be corrugated or flexible coarse wire braid may be used.

j. Where rf tightness is required and welded joints can not be used, the bond surfaces must be machined smooth to establish a high degree of surface contact throughout the joint area. Fasteners must be positioned to maintain uniform pressure throughout the bond area.

k. Chassis-mounted subassemblies should utilize the full mounting area for the bond as illustrated in Figures 3-13 and 3-14. Separate jumpers should not be used for this purpose.

l. Equipments attached to frames or racks by means of flange- mounted quick disconnect fasteners must be bonded about the entire flange periphery as shown in Figure 3-15. 130th the flange surface and the mating rack surface must be cleaned over the entire contact area.

m. Rack-mounted packages employing one or more dagger pins should be bonded as shown in Figure 3-16.

n. The recommended practices for effective bonding of equipment racks are shown in Figure 3-17. Bonding between the equipment chassis and the rack is achieved through contact between the equipment front panel and the rack front brackets. These brackets are bonded to the horizontal slide which is in turn are welded to the rack frame. The ground stud at the top of the rack is used to interconnect the rack structure to the facility ground system.

o. Where hinges are used, establish an alternate electrical path through the use of thin, flexible straps across the hinges as shown in Figure 3-18.

p. Standard MS-type connectors and coaxial connectors must be bonded to their respective panels over the entire mating surfaces as illustrated in Figure 3-19, Panel surfaces must be cleaned to the base metal for no less than 0.32 cm (1/8 in.) beyond the periphery of the mating connector.

q. In ideal situations cable shields should be bonded to the connector shell completely around the periphery of the shield with either compression or, preferably, soldered bonds.

r. When an rf tight joint is required at seams, access covers, removable partitions, and other shield discontinuities, conductive gaskets should be used. They may also be used to improve the bond between irregular or rough bonding surfaces. Gaskets should be sufficiently resilient to allow for frequent opening and closing of the joint and yet be stiff enough to penetrate any nonconductive films on surfaces.

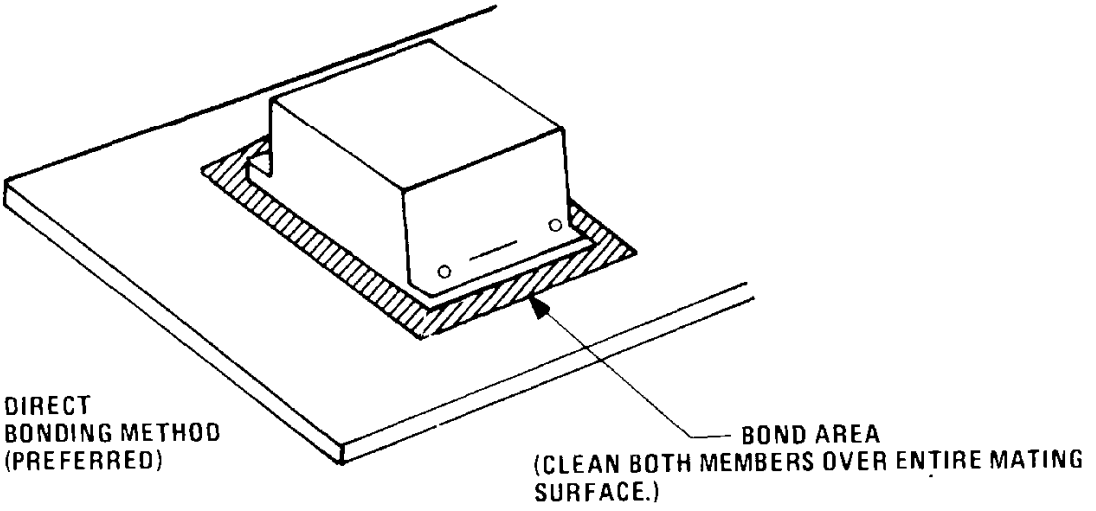

Figure 3-13. Bonding of Subassemblies to Equipment Chassis

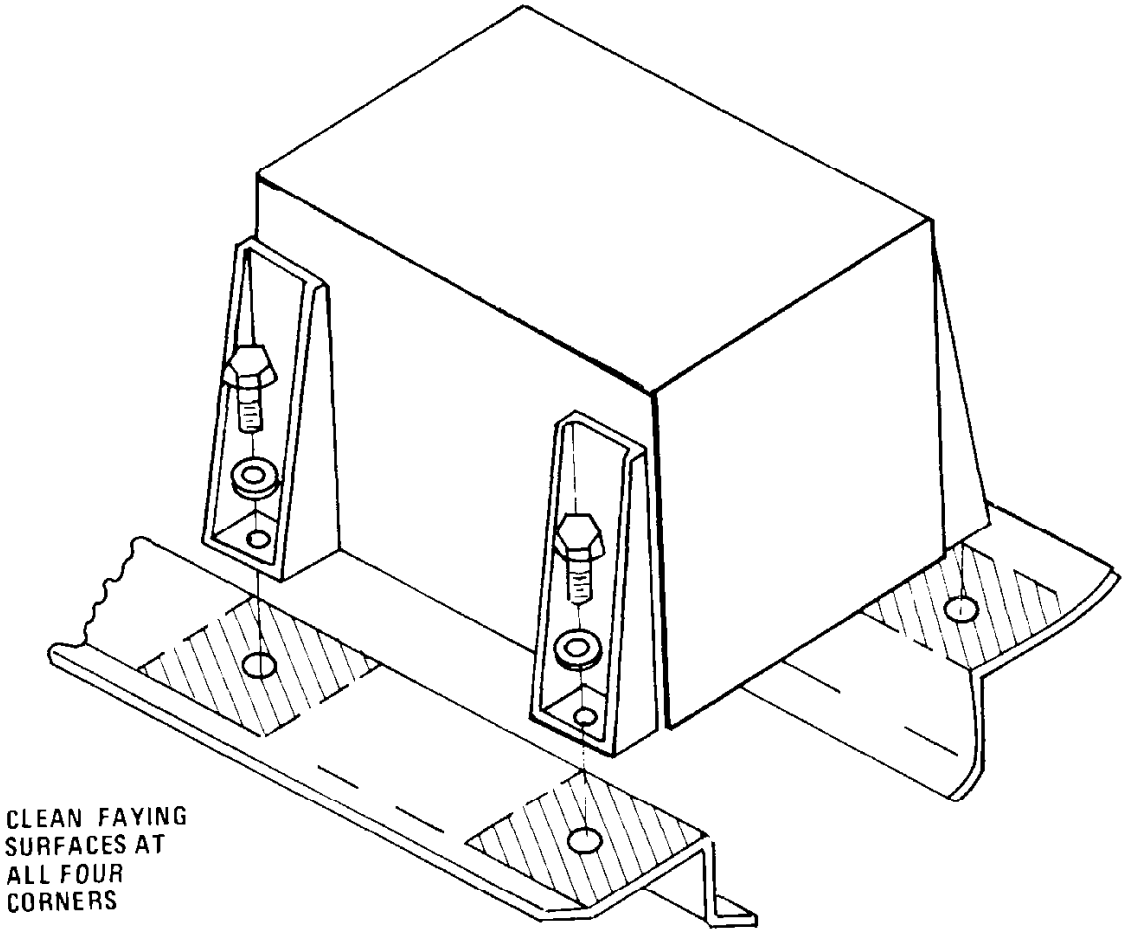

Figure 3-14. Bonding of Equipment to Mounting Surface

s. Gaskets should be firmly affixed to one of the bond members with screws, conductive cement, or any other means which does not interfere with their operation. The gaskets may be placed in a milled slot to prevent lateral movement.

t. All bonds which are not in readably accessible areas must be protected from corrosion and mechanical deterioration. Corrosion protection should be provided by insuring galvanic compatibility of metals and by sealing the bonded joint against moisture (see Section 1.7.3).

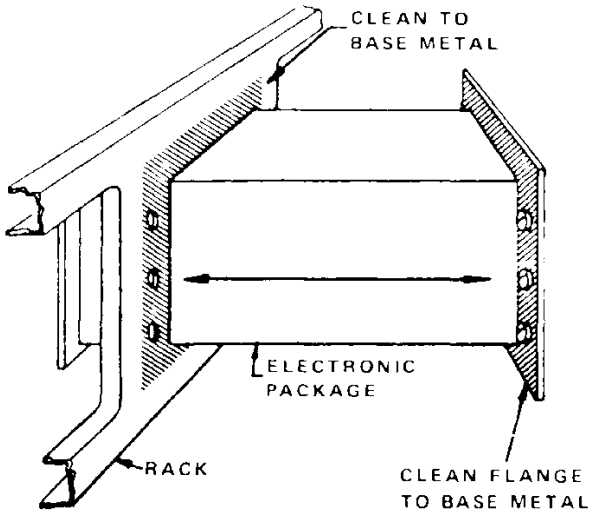

Figure 3-15. Typical Method of Bonding Equipment Flanges to Frame or Rack

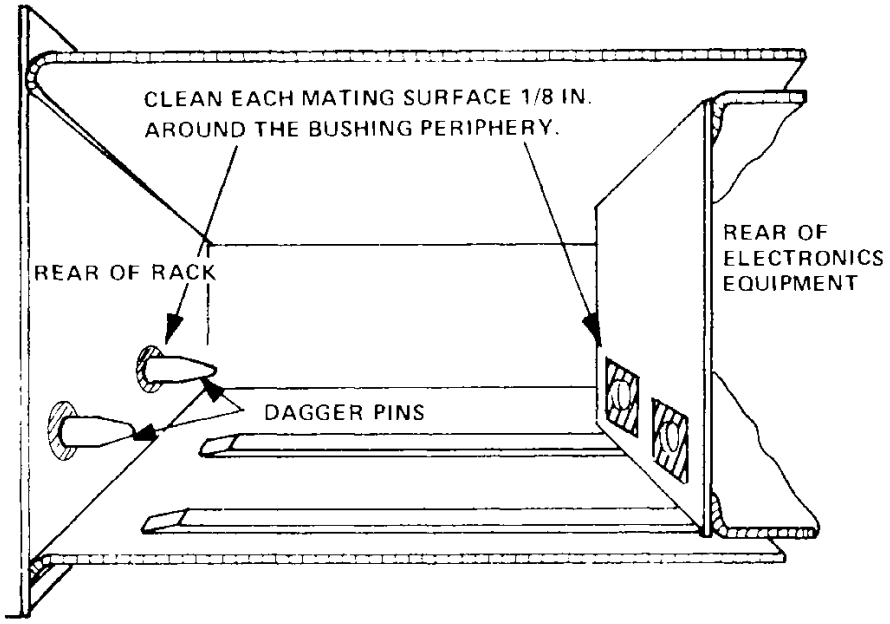

Figure 3-16. Bonding of Rack-Mounted Equipments Employing Dagger Pins

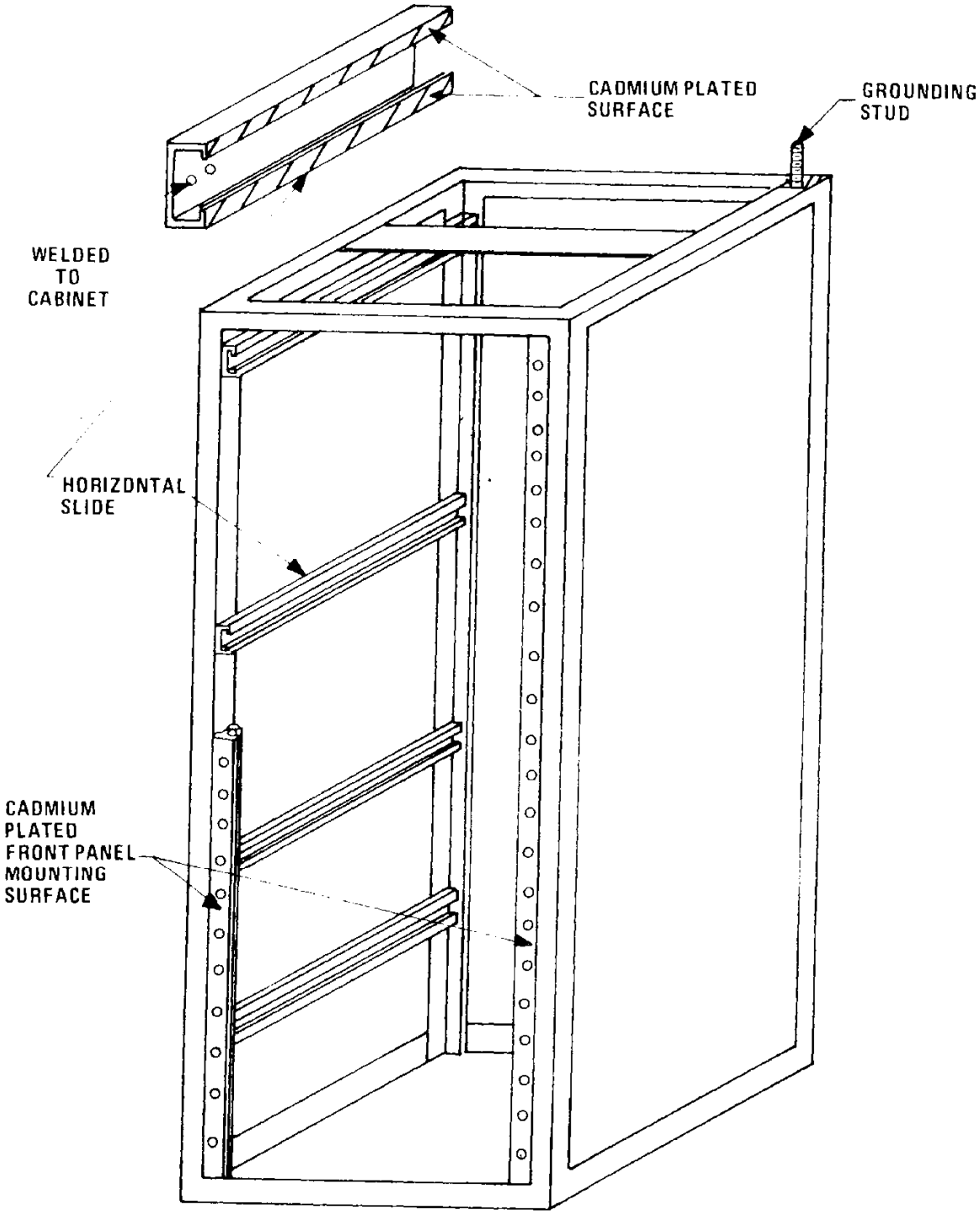

Figure 3-17. Recommended Practices for Effective Bonding in Cabinets

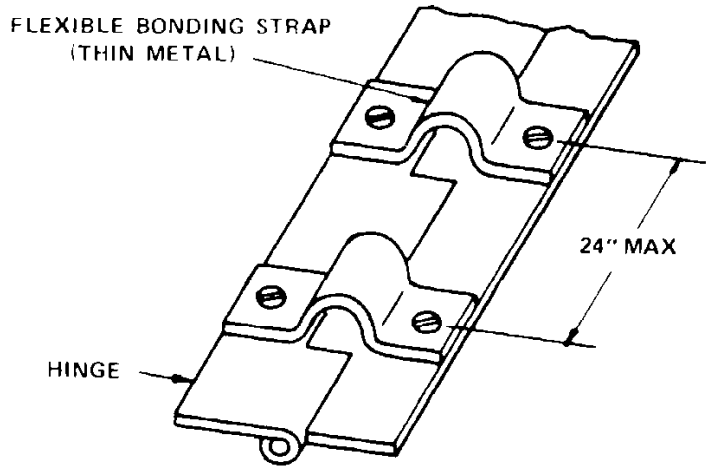

Figure 3-18. Method of Bonding Across Hinges

CLEAN TO BARE METAL 1/8 INCH LARGER THAN CONNECTOR
UNLESS MOUNTING AREA IS FINISHED WITH CONDUCTIVE COATING.

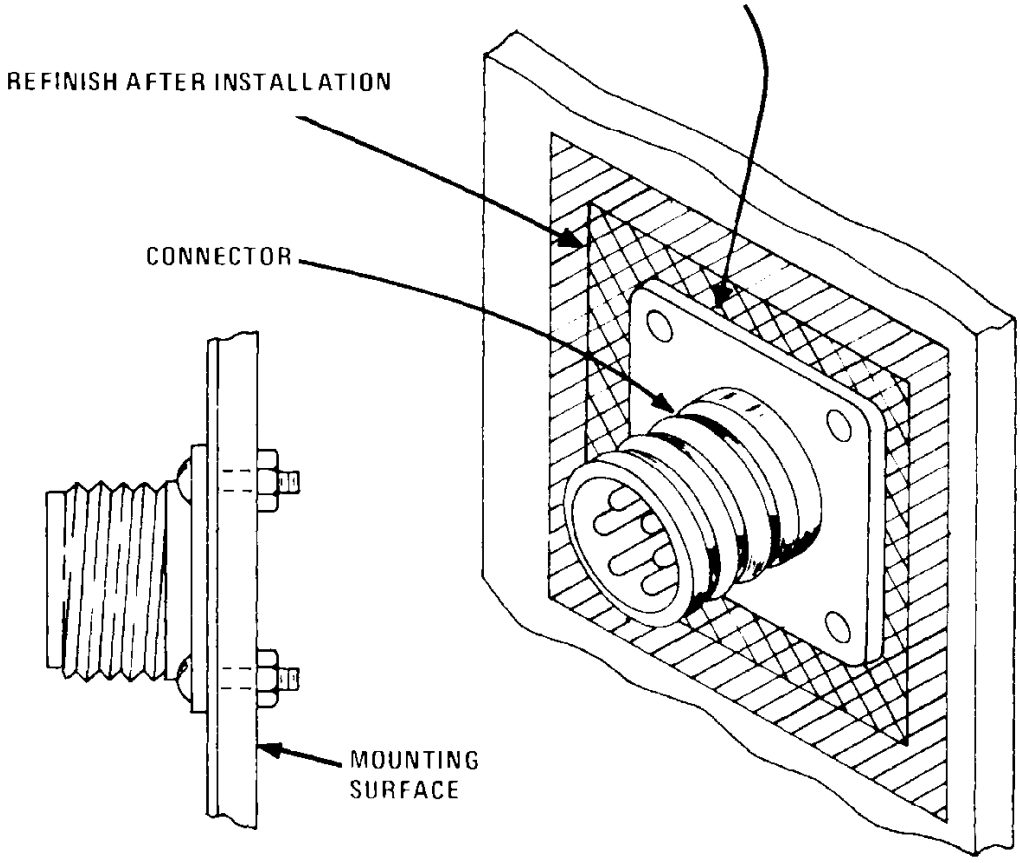

Figure 3-19. Bonding of Connector to Mounting Surface

3.4 SHIELDING GUIDELINES. Even during the circuit design phase of the equipment, shielding requirements should be considered. In this way, electromagnetic compatibility can be achieved during design thus alleviating much of the post-construction retrofit sometimes required for successful operation. A properly designed circuit can be compromised in the transition from a breadboard design to a packaged end item unless appropriate control measures are taken. Thus it is important that components be carefully selected with due regard to their sensitivity characteristics and shielding requirements. Then careful attention must be directed to the installation of these components to either take advantage of their inherent shielding properties or to overcome their short comings. In this way, coupling between circuits internal to the equipment and between internal circuits and external emitters or receptors can be controlled. The documentation and design requirements for the control of the electromagnetic emission and susceptibility characteristics of military C-E equipments are provided in MIL-STD-461.

3.4.1 Parts Selection.

a. In circuits where stray coupling may be detrimental, use shielded inductors.

b. Wherever possible, use shielded relays and electrically ground the shield.

c. The input transformer for isolation amplifiers should have electrically shielded primary windings.

d. Power transformers for susceptible circuits should have an electrostatic shield between the primary and secondary windings. This shield and the transformer case should be grounded to the equipment chassis.

e. Use shielded hookup wire for high level leads inside the chassis to prevent interference signals from coupling to other internal leads which extend through the chassis.

f. Select connector types which will provide sufficient pins for individual shield terminations.

g. Select connectors which will be able to withstand environmental conditions without degradation of the shielding characteristics of the connector.

3.4.2 Layout and Construction.

a. Do not place low level signal paths adjacent to high level signal paths or unfiltered power supply conductors.

b. Avoid the use of long parallel conductor runs.

c. Where long parallel runs cannot be avoided, e.g., on “Mother boards,” arrange conductor functions so that they successively progress from the low level, most sensitive leads to the highest level leads. The filtered dc power leads and low rate control functions (potentiometer leads, reference voltages, etc.) may run down the middle.

d. Ensure that excessive conductor parallelism does not occur between adjacent boards.

e. For rf and high speed digital paths, use double-sided board with microstrip transmission lines properly matched to the terminal impedances.

f. Effectively ground large unetched portions of boards and utilize the grounded portions as shields.

g. Consider carefully the positions of transformers and inductors on adjacent boards to assure that undesired magnetic coupling does not occur between circuits.

h. Assign circuit functions on boards following the principle of physically separating the most sensitive networks from the high level or transient producing networks.

i. Arrange or shield magnetic components to avoid interacting stray fields.

j. Orient the winding axes of adjacent transformers at 90° with respect to each other to minimize coupling due to the concentration of leakage flux along the winding axis and, hence, to minimize the required shielding.

k. Exercise care in placing shields close to circuits in which the circuit Q is a critical factor because losses in the shield can lower the circuit Q.

l. Ground any shields on printed circuit boards directly to the main chassis independently of any grounds located on the board.

m. The shields on printed circuit boards must never be used as a circuit return conductor since current flowing in the surface of the shield can result in radiated rf energy.

n. Use modularized construction wherever possible; in particular, place power line input filters in shielded modules.

o. Extreme high and low level stages should be isolated in separate compartments.

p. Circumferentially bond power line filter cases to the chassis. If the surfaces are aluminum, the surfaces should be iridited, never anodized or primed. Mounting ears or studs must exhibit firm and positive contact over the entire area of the mounting surface.

q. Most common lower frequency interference is the so-called “hum” from power conductors and is predominately magnetic. The shielding of a circuit from power frequency interference may require the use of a high permeability magnetic shield completely surrounding the sensitive circuit.

r. Provide for effective electric and magnetic field shielding of the power supplies, battery chargers, dc to ac inverters, and dc to dc converters.

s. High voltage power supplies should be adequately shielded and carefully isolated from highly sensitive circuits.

3.4.3 Equipment Enclosures. The shielding effectiveness of the enclosure depends on the structural material and on the mechanical design, construction, and installation of the equipment. The choice of material depends primarily on the ambient field and on the degree of shielding required (see Volume I, Section 8.3). The main problems with shielding, however, are usually not with the material but with the control of leakage through openings at seams, apertures, and wire penetrations. The following guidelines are suggested as aids toward controlling this high leakage.

3.4.3.1 Seams.

a. Hold mechanical discontinuities to a minimum.

b. Bond equipment enclosures at every seam and discontinuity.

c. Recognize that the poorest electrical joint will determine the shielding effectiveness of the enclosure.

d. Obtain clean metal-to-metal contact at seams to prevent leakage and radiation of energy.

e. Where possible, seams should be welded, brazed, or soldered such that the joint is continuous; however, satisfactory results for some applications can be obtained with closely spaced rivets, spot welding, or nuts and bolts.

f. Provide as much overlap as possible and closely space fasteners to minimize the tendency of the joint to buckle.

g. Ensure that the fastening method exerts sufficient pressure to hold the surfaces in contact in the presence of deforming stresses, shock, and vibrations associated with the normal operation of the equipment in its expected environment.

h. Use gasket or finger stock material where seam unevenness is encountered or where removable panels, drawers, etc., are used. The gasketing material should fill gaps and uneven places to provide continuous electrical contact between the mating surfaces.

i. Attach removable covers and panels with closely spaced screws and apply conductive gasketing around the periphery.

j. Choose gaskets with properties of high resilience and high conductivity.

k. Provide the minimum gasket thickness and width which will allow for the expected surface discontinuities of the joint.

l. Provide the pressure necessary to achieve an rf-tight seam.

m. Mount gaskets in permanent seams as shown in Figure 3-20. The features to be observed in this figure are:

(1) Gasket is bonded to one metallic surface of the seam with conductive adhesive; surfaces are cleansed of nonconductive material before applications.

(2) Metallic surface is machined to smooth finish and all nonconductive materials are removed.

(3) Appropriate mechanical fasteners (i. e., clamps, bolts, etc.) are used to provide a high pressure on the rf gasket. The pressure should be reasonably uniform along the entire length of the seam.

n. Ensure that all rf gaskets are adequately compressed.

o. On hinged side of doors or panels, mount gasket as shown in Figure 3-21(a). If the gasket is mounted in this manner, it receives little or no sliding motion as the door compresses it. Whereas, if the gasket is mounted as shown in Figure 3-21(b), it will be more likely to wear out quickly because of the sliding motion of the door.

p. Ensure that the metal surfaces which mate with gaskets are free of oily film, corrosion, moisture, and paint.

q. Handle finger stock with extreme care and install it in a recessed or inner lip to minimize the possibility of mechanical damage.

r. Carefully maintain the pressure exerted by the spring fingers because this pressure is highly important to the shielding effectiveness of the seam.

3.4.3.2 Penetrations and Apertures. Mechanical and electrical interfaces require that openings exist in the equipment enclosure. Since each interface degrades the shielding effectiveness of the enclosure, the selection and implementation of techniques to provide continuity at these interfaces are important. Figure 3-22 illustrates both good and bad practices.

a. Mount filters for power and control cables inside the shield and extend the filter input terminals through the shield.

b. Metal control shafts extending through an enclosure should be grounded with metallic fingers, a grounding nut, or an rf gasket. An alternative to the grounded metal shaft is a nylon, teflon, or other dielectric shaft inserted in a waveguide-below-cutoff cylinder as illustrated in Figure 3-23.

c. Keep holes for ventilation or drainage of moisture small in effective electrical area to avoid decreasing the shielding efficiency. A “small” hole is one which is small in dimension compared to the operating wavelength. Larger holes should be covered by a fine mesh copper screen, or alternately, a series of small holes may be used.

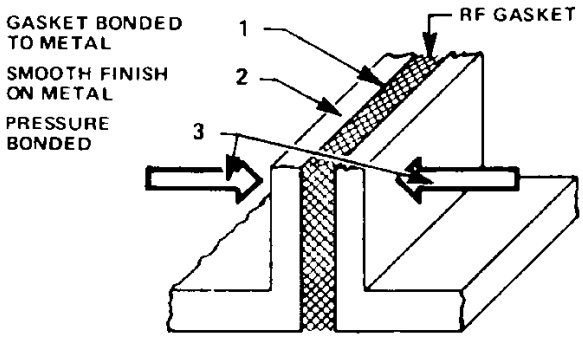

Figure 3-20. Method of Making Permanent Seam Using a Gasket

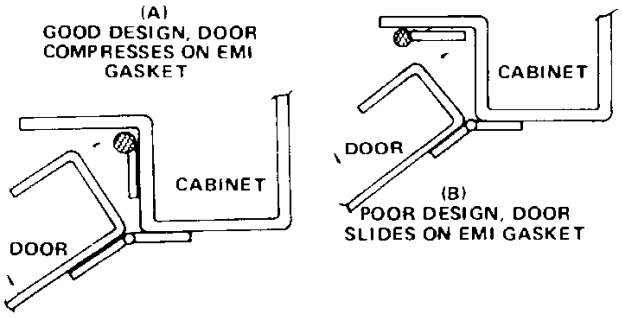

Figure 3-21. Mounting of Gasket on Hinged Side of Equipment Doors and Panels

d. Design equipment enclosures that require large inlet and/or outlet apertures to include suitable shielding such as honeycomb placed over the aperture. Table 3-1 lists typical cutoff and recommended usable frequencies of standard honeycomb cell sizes. Shielding may also be provided by layers of copper screening with an attendant lower shielding effectiveness and higher air resistance. The mesh size should offer 60 or more strands per unit wavelength at the highest frequency to be shielded.

Table 3-1

Frequency Properties of Standard Sizes of Honeycomb

Cell Size (in.)	Cutoff Frequency (GHz)	Upper Usable Frequency (GHz)
1/8	48	16
3/16	32	10.7
1/4	24	8.0
3/8	16	5.3

e. Mount screens over apertures in the manner shown in Figure 3-24.

f. Compare the attenuation of various types of screen with the shielding effectiveness required before choosing the screen to be used.

g. Shield meters with one of the techniques illustrated in Figure 3-25.

h. Provide metal caps for fuse receptacles and for phone and meter jacks.

i. Use fuses, jacks, and receptacles that have metallic bodies where possible.

j. Shield either the front or rear of pilot and indicator lamps. Shielding of the front may be achieved through the use of wire screen or conductive glass

k. Use equipment enclosures and cabinets to attenuate unwanted signals.

l. Employ internal modular shielding in specific applications where the enclosure shield is inadequate.

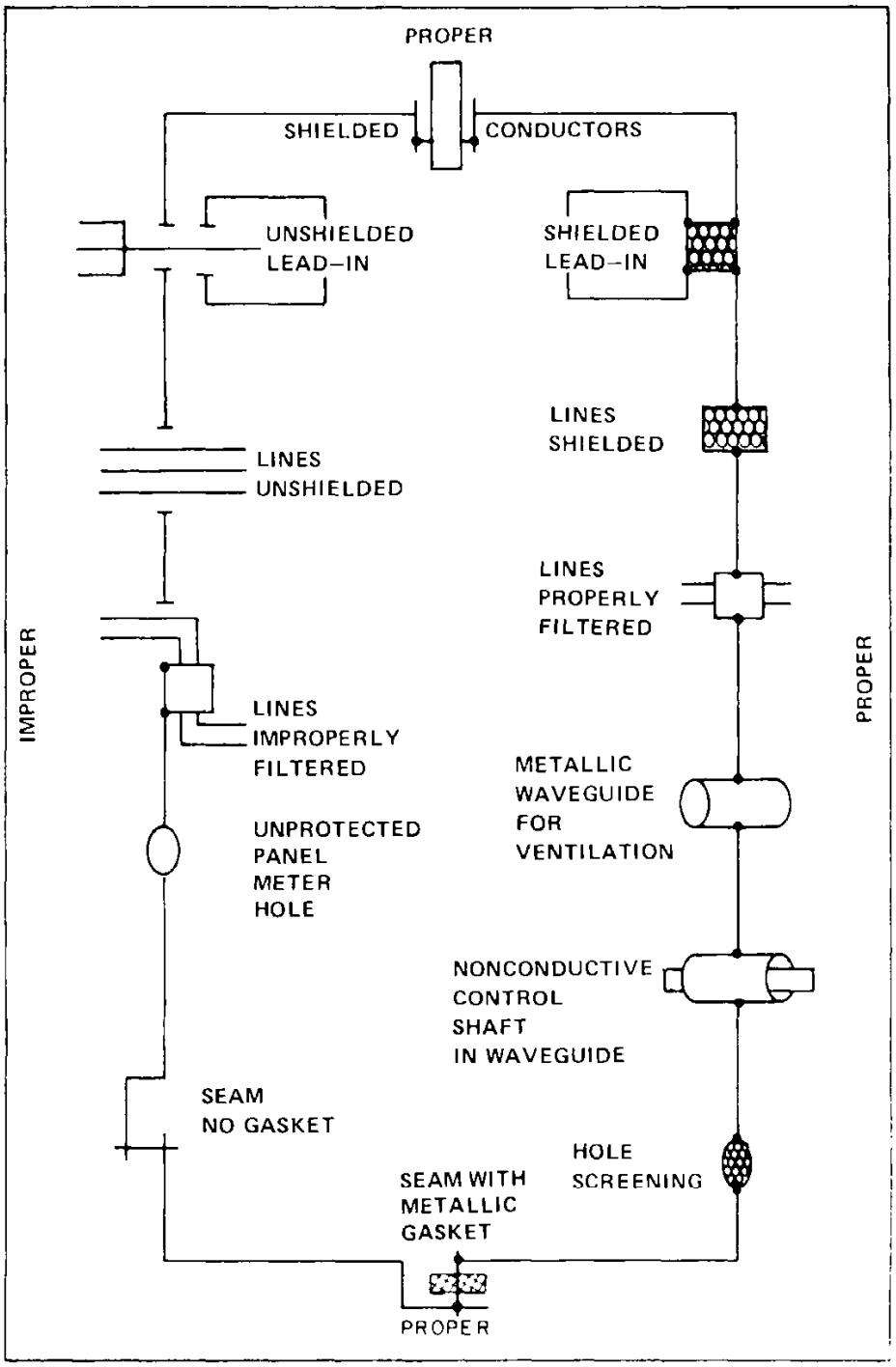

Figure 3-22. Illustration of Proper and Improper Shield Penetration

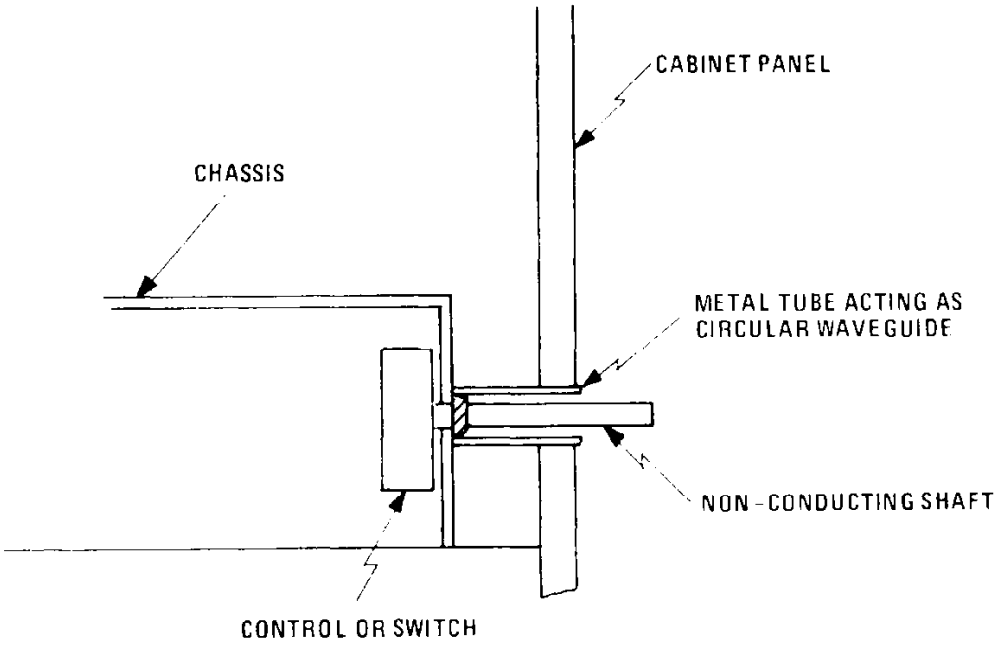

Figure 3-23. Use of Cylindrical Waveguide-Below-Cutoff for Control Shaft Shield Penetration

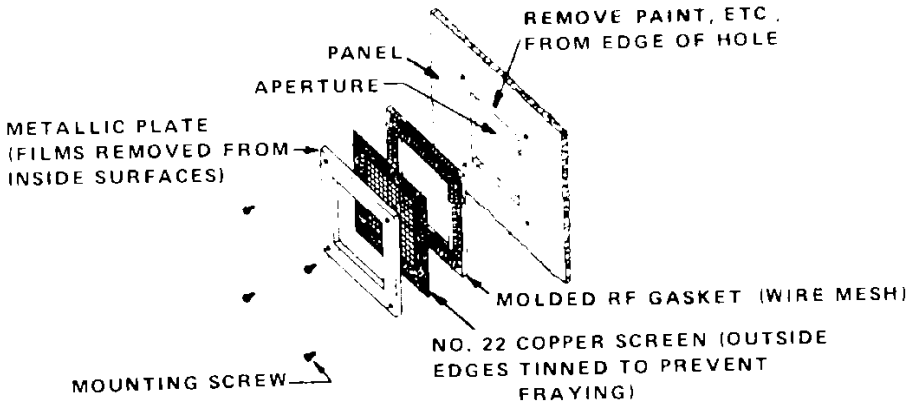

Figure 3-24. Method of Mounting Wire Screen Over a Large Aperture

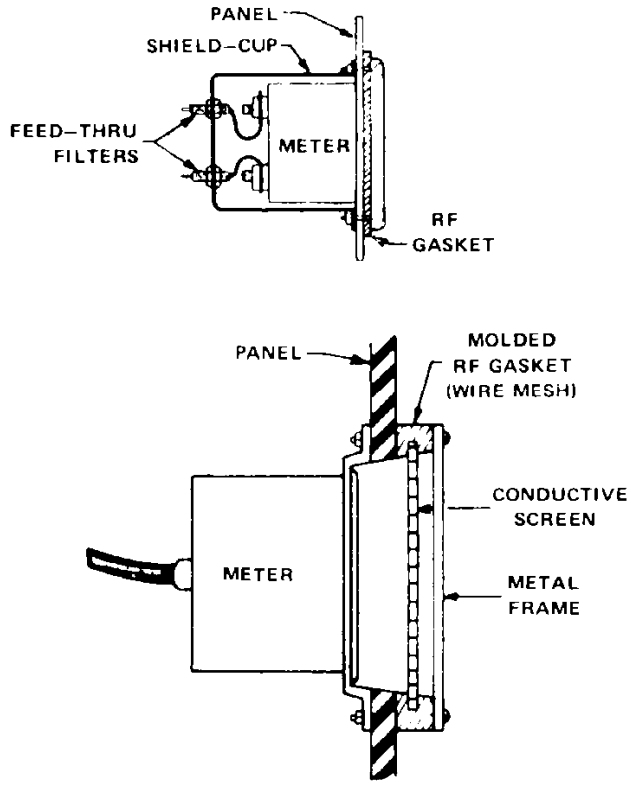

Figure 3-25. Acceptable Methods of Shielding Panel-Mounted Meters

m. Use internal walls and compartments to limit propagation of interference into and out of equipment subassemblies.

n. Separate high level sources from sensitive receptors with internal shields such as panels or partitions.

3.5 COMMON-MODE NOISE CONTROL AND INSTRUMENTATION GROUNDING.

3.5.1 Common-Mode Noise Control.

Primarily, common-mode noise is reduced by either (1) controlling its magnitude in the vicinity of the susceptible circuit, network, or device, or (2) employing those practices which minimize the coupling to the existing voltages, currents, or fields. The first alternative is accomplished by physically separating the source from the susceptible circuits, shielding the source, reducing the current or voltage level at the source, and minimizing any impedance snared in common by the desired and undesired currents. The second alternative involves grounding only one side of a noise voltage source, balancing of signal lines, operating in a differential mode, striving for a zero-resistance reference plane, shielding of signal lines, using a less susceptible mode of signal transmission, minimizing signal loop pickup area, or combinations thereof. (See Volume I, Section 6.4 for additional information on these minimization techniques.)

In some situations, one of these techniques may be sufficient (if properly implemented) to reduce the noise level to an acceptable level. In general, however, combinations of elements of both alternatives will be necessary. To decide which combinations offer the greatest advantages for least cost, the equipment or system must be carefully analyzed to determine its specific operational properties (or its requirements); the anticipated electromagnetic environment should be carefully examined in order to ascertain tile specific type of protection that will probably be required; then these two sets of factors must be compared with each other to determine the steps to be taken to achieve effective and reliable equipment or system operation.

Common-mode noise control is primarily the application of proper grounding, bonding, and shielding practices in combination with cureful circuit and equipment functional design to maximize the signal to noise ratio within the overall system. In particular, the lower frequency practices of Section 3.2.1.1 should be emphasized.

3.5.2 Instrumentation Grounding. (3-5)

Many, if not most, data instrumentation systems are concerned with the measurement or detection of physical phenomenal (or changes in them) that require periods of observation or measurement that range from a few milliseconds to several minutes or longer. Because of the relatively slow nature of the event, the fundamental frequency of the transducer output may range from zero (dc) to a few hundred hertz. Power distribution systems, electromechanical switches, and atmospheric noise produce extraneous voltages whose energy content is strongly concentrated within this lower frequency region. Because of this overlap of signals, special techniques are generally required to keep the voltages or currents produced by the extraneous sources from obscuring the transducer outputs.

Data instrumentation systems may employ either analog or digital signals or a combination of both. The methods of grounding analog and digital systems are considered separately although the physical principles of noise reduction for both are basically the same.

3.5.2.1 Analog Systems. Since the analog signals are primarily lower frequency in nature, a basic single-point ground should be implemented. The signal return line should be grounded at one end only or not at all (i.e., it should be balanced). Similarly, shields around signal lines should be grounded at one end only.

3.5.2.1.1 Grounded Transducers. The bonded (grounded) thermocouple, illustrated in Figure 3-26, is used with a single-ended data amplifier whose output drives recording devices, such as oscillographs, strip-chart recorders, and magnetic tape recorders.

a. The shield which surrounds the transducer signal leads should be grounded at the same point as the transducer to ensure that the shield and signal leads are at virtually the same potential.

b. When single-ended amplifiers must be used, the recorder should be left grounded.

c. When the bonded thermocouple is connected to an isolated differential amplifier as shown in Figure 3-27, the shield of the input cable should be connected to the amplifier internal guard shield to continue the signal shield within the amplifier. Notice that a grounding bus is shown connected between the data system signal reference and earth ground of the test area. This ground bus is necessary in any instrumentation system which uses isolated differential amplifiers in order to (1) provide the earth reference for the signal circuitry within the recording system to reduce high voltage hazards, and (2) minimize the common-mode potentials that otherwise exist between the amplifier's input and output if the data recording system was grounded to a separate earth or facility ground. Notice, also, that the amplifier case and output shield are connected to the data system (or load end) ground.

d. Grounded bridge transducers should be excited with a balanced dc source. By balancing the dc excitation supply relative to ground as shown in Figure 3-28 the entire bridge will be balanced with respect to ground and the unbalanced impedance presented to the amplifier input will be due only to the leg resistances in the bridge. Although a ground loop still exists, its effect is greatly reduced by a balanced excitation supply.

e. Wherever possible, use an isolated amplifier in the manner illustrated in Figure 3-29 with bridge transducers. With this configuration, both the transducer and the amplifier can be grounded without degrading system performance.

f. Ensure a low resistance earth ground connection (see Section 1.2).

g. Provide a single common signal ground reference point for all grounded transducers at the test area.

h. Connect the instrumentation cable shield of each data channel as close to the transducer ground connection as possible.

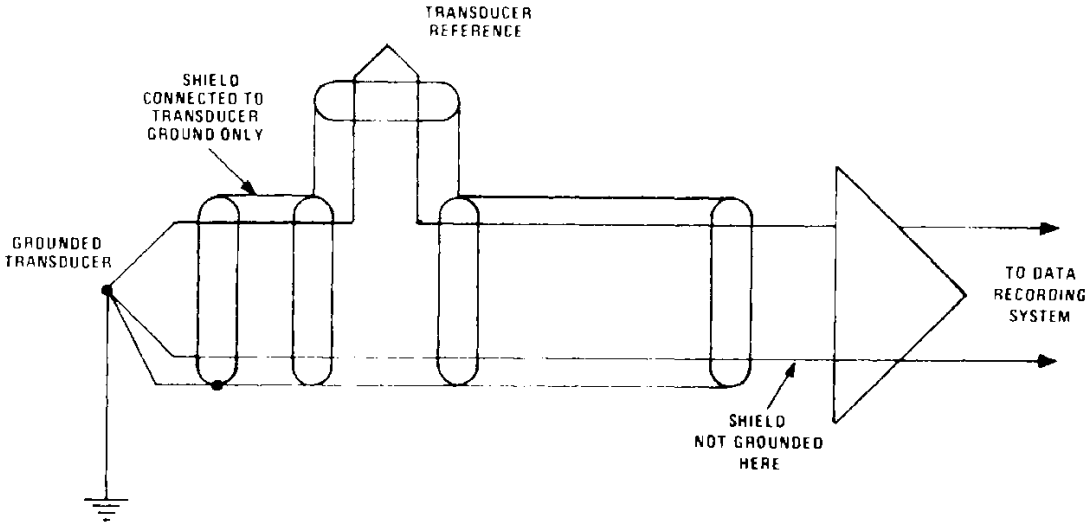

Figure 3-26. Grounding Practices for Single-Ended Amplifiers

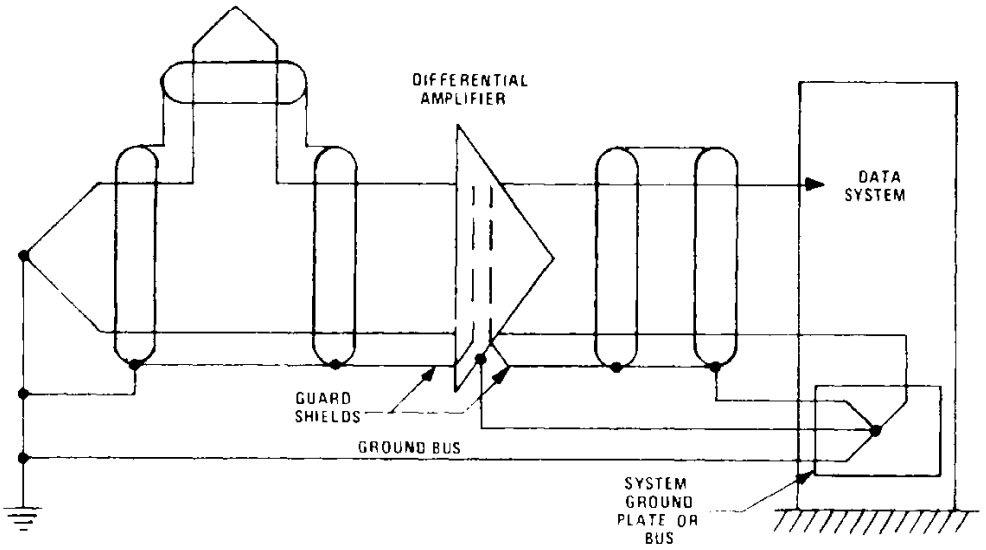

Figure 3-27. Grounding Practices for Differential Amplifiers

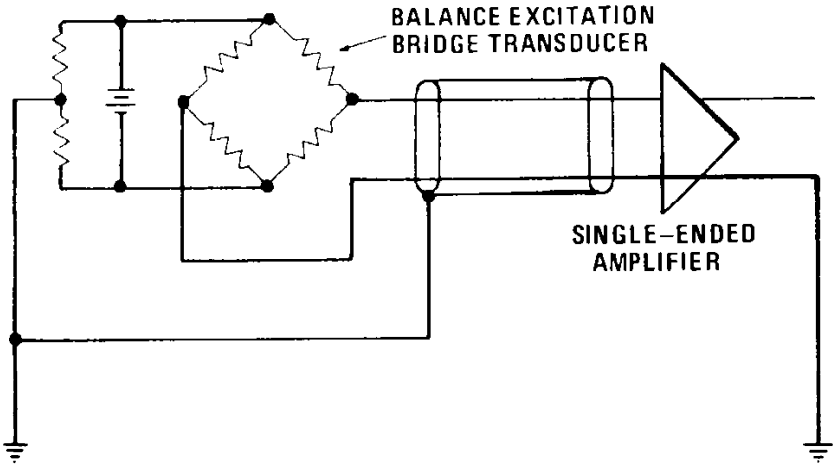

Figure 3-28. Method of Grounding Bridge Transducers

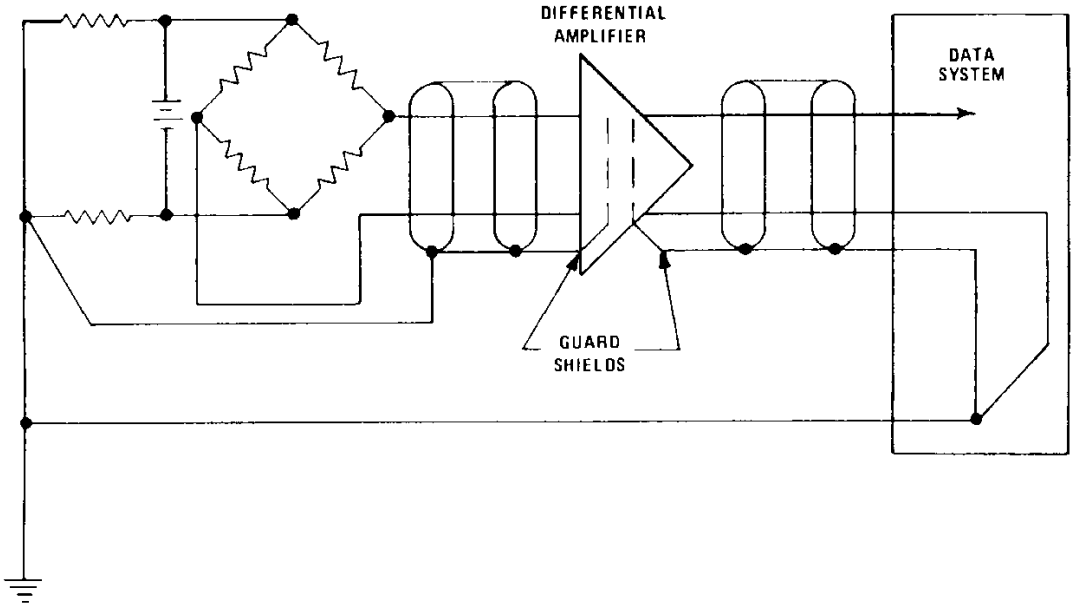

Figure 3-29. Use of Isolated Differential Amplifier With Balanced Bridge Transducer

i. Use twisted shielded transducer extension wires.

j. Use a floating load on the output of a single-ended data amplifier when the amplifier input is a grounded transducer.

k. Connect guard shield of data amplifier to input cable shield.

l. Always use insulated shielded cables. Uninsulated shields should never be used in data instrumentation systems.

3.5.2.1.2 Ungrounded Transducers.

a. Figure 3-30 illustrates the grounding techniques recommended for ungrounded transducers. The metallic enclosure of the transducer is connected to the cable shield and both the enclosure and the shield are grounded at the transducer. If the load on the cable signal line is a single-ended amplifier as shown in Figure 3-30(a), the shield of the input cable should not be connected to the amplifier. The case of the amplifier should be grounded at the load.

b. Figure 3-30(b) shows the recoin mended way of grounding the system when using an isolated amplifier. (Certain types of non-isolated differential amplifiers require that a transducer ground path be provided for proper amplifier operation. The instructions supplied by the amplifier manufacturer should be consulted for correct procedures.)

c. Provide a single common ground reference point for all cable shields.

d. Ground all input cable shields at the transducer.

e. Provide a continuous overall shield for signal wires from the transducer case to the input of the data amplifier.

f. Connect isolated amplifier guard shield to input cable shield.

g. Do not allow more than one ground connection in each input cable shield.

3.5.2.1.3 Amplifiers.

a. Single-ended amplifiers can be used in digital data acquisition systems if channel-to-channel isolation is provided (e.g., through the use of floating loads).

b. Single-ended amplifiers should not be used with grounded (bonded) transducers in order to avoid channel-to- channel ground loops.

c. Single-ended amplifiers should not be used with grounded bridges to avoid short circuiting one leg of the bridge.

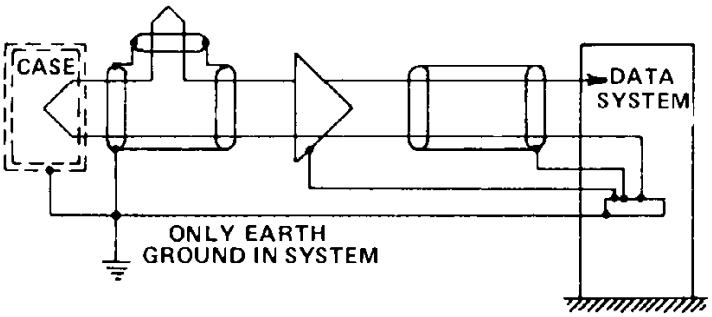

(a) SINGLE-ENDED AMPLIFIER

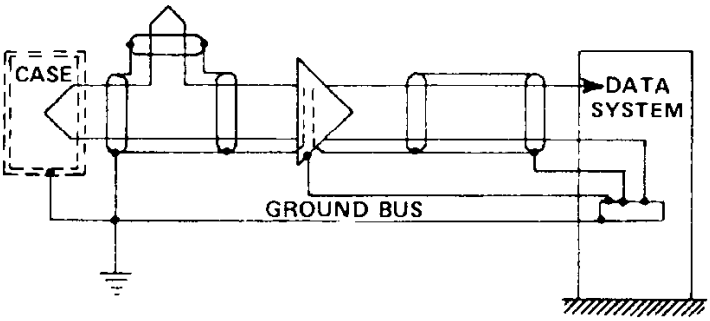

(b) ISOLATED DIFFERENTIAL AMPLIFIER

Figure 3-30. Recommended Grounding Practices for Floating Transducers

d. Connect amplifier output guard shield to data system ground bus.

e. If a permanent unavoidable instrumentation ground exists at test area as well as at the data system, use isolated differential amplifiers to break the ground loop.

3.5.2.2 Digital Data Systems. A digital circuit operates by recognizing the state of a two-level voltage or current signal. the speed of the system is determined by the speed at which the levels can be changed. Because of the capacitive and magnetic coupling effects resulting from the very fast rise and fall times of digital pulses, take every precaution to minimize the effects.

a. Twist clock lines with their return leads to minimize the magnetic field near such lines.

b. Use point-to-point wiring as much as possible to reduce capacitive coupling.

c. Provide multiple paths in the ground wiring to distribute the ground current among several wires.

d. Use electrostatic shielding with care to avoid excessive loading of data lines.

e. Wire all digital circuits using shortest wire length possible.

f. All ground wires must converge to system common ground point.

g. Maintain maximum distance between digital circuits and low level analog circuits.

h. In a system where both analog and digital circuits must be housed in the same equipment cabinet, keep as much physical separation between them as possible, e.g., at opposite ends of the cabinet. A common ground plate for the system can be located in the center of the cabinet or two ground plates can be utilized, one for analog ground and one for digital ground. These two ground plates must then be tied together with a low inductance bus and then tied to the system ground bus line.

3.5.2.3 Recording Devices.

3.5.2.3.1 Magnetic Tape Recorders.

a. Magnetic tape recording systems are mostly single-ended and should therefore conform to much the same grounding practices as recommended for digital systems.

b. Earth ground should be made at the test area with a single 1/0 cable extending to an isolated grounding plate within the tape cabinet.

c. When using only one recording device for a given channel, the channel may be connected directly into the recorder as shown in Figure 3-31.

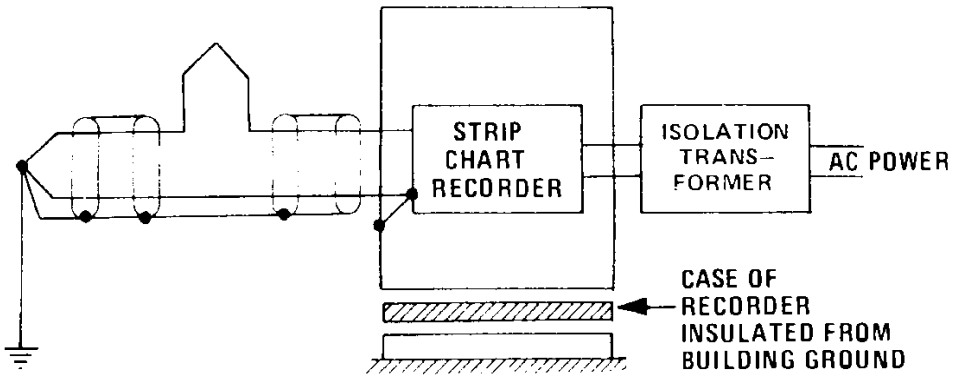

Figure 3-31. Grounding for Single Channel Strip Chart Recorder

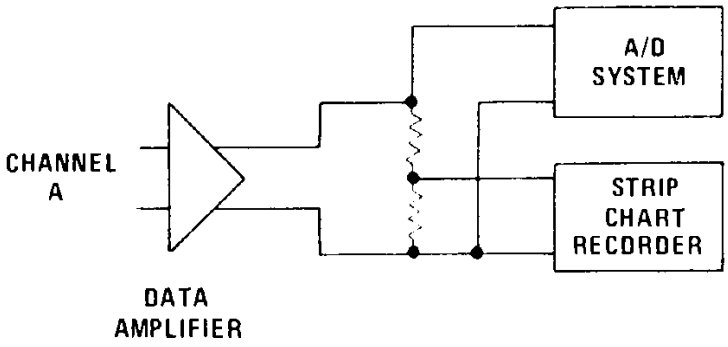

Figure 3-32. Resistive Isolation of Data Channels

d. Should the tape channels receive data in parallel with other single-ended channels (such as arise in A/D systems), take special care to minimize the effects of inherent loops. The optimum method of recording with two single-ended devices in parallel from the same data channel is to use an amplifier with isolated outputs. (In this way, the inherent loop is broken and noise is minimized.)

3.5.2.3.2 Strip Chart Recorders.

a. Strip chart recorders are mostly single-ended and should be grounded as described in Section 3.5.2.3.1 for magnetic tape devices.

b. Since the strip chart recorder is a nulling device, its input impedance will change as it deflects from one position to another. This impedance change and the accompanying voltage feedback can be coupled directly from the strip chart input over to the input of a paralleled device such as an A/D converter. Gross error can result in the A/D channel. This difficulty can be resolved by using resistive isolation as shown in Figure 3-32 or by employing dual amplifier outputs, one for each channel, as described in Section 3..5.2 .3.1 for analog tape systems.

3.5.2.3.3 X-Y Plotters. X-Y plotters are available in either digital or analog input configurations. The digital type plotters are usually connected as peripheral devices to computers or A/D systems and should be grounded in accordance with the recommended digital practices. Analog type X-Y plotters are normally single-ended and should be grounded and connected in the same manner as described for strip chart recorders.

3.6 EMP CONSIDERATIONS. Those general design practices which are effective for the control of electromagnetic interference generally are applicable to protection against EMP. The two factors of the EMP threat to be given particular emphasis are (1) the strong magnetic field component and (2) the overall high level of the incident field (see Volume I, Chapter 10).

a. Because of the magnetic field component, design practices which minimize magnetic pickup are most important. Practices such as minimizing loop pickup area by twisting signal conductors with their returns, twisting of power supply conductors, routing conductors close to ground planes, and utilizing minimum length conductors must be emphasized.

b. EMP shielding requires the use of materials which provide high attenuations at frequencies up to 200 MHZ. Because of saturation effects, the thickness necessary for complete shielding can lead to rather heavy and bulky enclosures. Seams, joints, and apertures must be given the same careful attention and control required in the construction of shields for buildings and structures. For these reasons, it is generally more practical to shield the building or structure in which the equipment is located than it is to shield individual pieces of equipment.

c. In a shielded area or facility, critical equipment should be located as far from corners, discontinuities, openings and penetrations as is practical. The most susceptible equipment should occupy the center locations with the least susceptible equipment closer to the shield.

d. Components exhibit different degrees of susceptibility to damage from EMP (see Volume I, Chapter l0). Electromechanical devices appear to be the least susceptible. Vacuum tube devices offer reasonable immunity, while solid state devices such as diodes, transistors (FET's -Field Effect Transistors- in particular), silicon controlled rectifiers, and integrated circuits exhibit damage susceptibility thresholds two to three orders of magnitude less than the threat posed by the EMP. These factors should be kept in mind during initial design and, wherever a circuit function can be accomplished with a less susceptible device, use the device with greater immunity. For example, an electromechanical relay will be less likely to suffer damage than will an SCR (Silicon Controlled Rectifier) or transistor switch. A vacuum tube front end for a receiver will offer greater immunity than will the transistor version. Where the more susceptible devices must be used, they should be adequately shielded (the compartmentalization of subassemblies is probably the most economical and practical approach) with appropriate surge protection applied to all incoming and outgoing leads.

e. Effective EMP design practices require careful tradeoff comparisons between functional requirements, device properties, physical constraints, and overall cost. Consult Volume I, Chapter 10 for additional design assistance; References 3-6 and 3-7 are also highly recommended.

3.7 EQUIPMENT INSPECTION AND TEST PROCEDURES.

Before installing, or accepting for installation, any piece or item of electronic equipment in a facility designed or modified to meet the recommendations represented herein, the equipment should be evaluated for conformance with the practices set forth in this volume. Record the results of this evaluation on the Inspection Form given in Section 3.7.11.

Before beginning the evaluation, determine whether the equipment is designed to operate at frequencies (a) from dc to 30 kHz (in some cases up to 300 kHz), or (b) above 300 kHz (in some cases down to 30 kHz). Square wave signals are always considered to be higher frequencies. In making this determination, the primary signals to consider are those which interface or communicate with other equipments or systems. For example, the frequencies of control and monitor signals, communication signals, data links, and input and output rf signals should be noted. (Those signals arising from internal sources and utilized only internally to a unit or piece of equipment are primarily the designer’s responsibility.) List the frequencies under Part IA of the Inspection Form.

After establishing the frequency classification of the equipment, inspect the lower frequency types for conformance with the recommendations set forth in Section 3.2.1.1 and inspect the higher frequency types for conformance with the recommendations contained in Section 3.2.1.2. Some equipments will necessarily utilize both lower and nigher frequency signals for interfacing purposes. For example, wideband data links frequently extend from low audio frequencies to frequencies well above 10 MHz. Such hybrid systems should be inspected for conformance to the recommendations set forth in Section 3.2.1.3. Specific inspection steps and procedures for all three types of equipments are contained in the following sections.

3.7.1 Lower Frequency Equipments.

a. Examine the drawings and schematics and visually inspect to see if an isolated single-point signal ground as described in Section 3.2.1.1.1 is provided. Provide a brief description of the signal ground network under Part IB of Inspection Form or attach copies of the schematics or drawings. Verify that the internal signal ground network is terminated to an insulated signal ground terminal of a type described in Section

3.2.1.1.2 or as otherwise specified. If a wire is used, verify that the size conforms to the 500 cmil per foot criteria (or as specified). Enter the information requested on Part IC of the Inspection Form.

b. Verify that the signal ground is correctly identified with a yellow label or color code.

c. With all cables (signal cables, control lines, power cables, etc.) disconnected, measure the resistance between the signal ground terminal and the equipment case with an ohmmeter (see Figures 3-33 and 3-34). The resistance should be greater than one megohm. Also, measure the resistance between each ac input terminal (ground wire excluded) and the case. A resistance of one megohm or greater should be measured.

d. Record both readings on the Inspection Form. If the measured resistance is less than one megohm, proceed as follows:

(1) First check to see that all cables, lines, cords, etc., are disconnected from the equipment or that the far ends of any such cables are insulated from other equipments and the structure. Disconnect all cables found still connected.

(2) If no connected cables are found or the low resistance reading still exists after disconnecting all cables, visually inspect the mounting of the signal ground terminal to see that it is properly insulated from tile case or cabinet (disassemble, if necessary). Alternately, disconnect the signal ground connection inside the equipment and then measure the resistance between just the terminal and the case, If the terminal is not insulated from the case or cabinet, it must be redone.

(3) If the preceding two steps fail to identify the reason for the lack of isolation, the equipment schematics and [mechanical layout should be analyzed and inspected to locate the compromise in the signal ground isolation. Be particularly alert for sneak paths through components (transformers, switches, relays, etc.), readout devices (meters, lights), physical contact between the case or cabinet and the signal ground, and wiring errors.

e. Measure the resistance between the green safety wire and the case; the resistance reading should be 0.1 ohm or less. If a higher resistance reading is obtained, inspect the equipment to see if the green wire in the power cord has been connected to the case or cabinet. If the connection is there physically, was the paint removed from the area of attachment? Are screws or nuts fastened securely? If any of these deficiencies exist, they must be corrected before installing or energizing the equipment.

f. Inspect all cabling and connectors to see that balanced signal lines are used for lower frequency interfacing: lines and that cable shields are grounded only at one end. The shields of individual cable pairs must be isolated from each other except at the common ground points. Check overall shields for grounding in accordance with Section 3.2.1.1.6. Record any specifically noted deficiencies under Part IE of the Inspection Form.

g. If the equipment is already installed, verify that the signal ground terminal is connected to the nearest feeder ground plate of the lower frequency signal ground network for the facility. Check the size of the cable to see that it conforms to the 500 cmil per foot criteria of Section 3.2.1.1.3 or as otherwise specified.

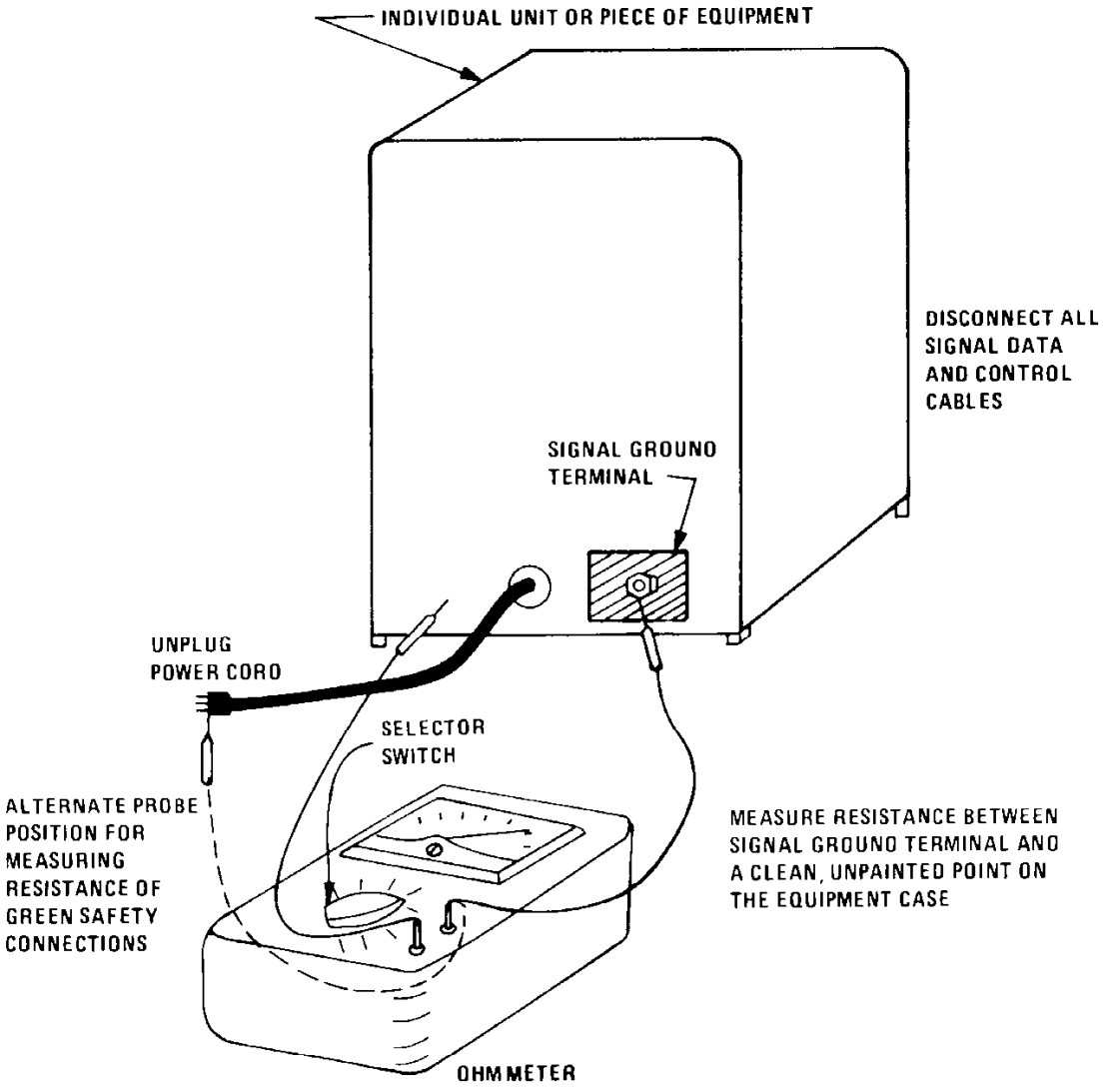

Figure 3-33. Signal Ground Terminal Isolation Resistance Test for an Individual Equipment

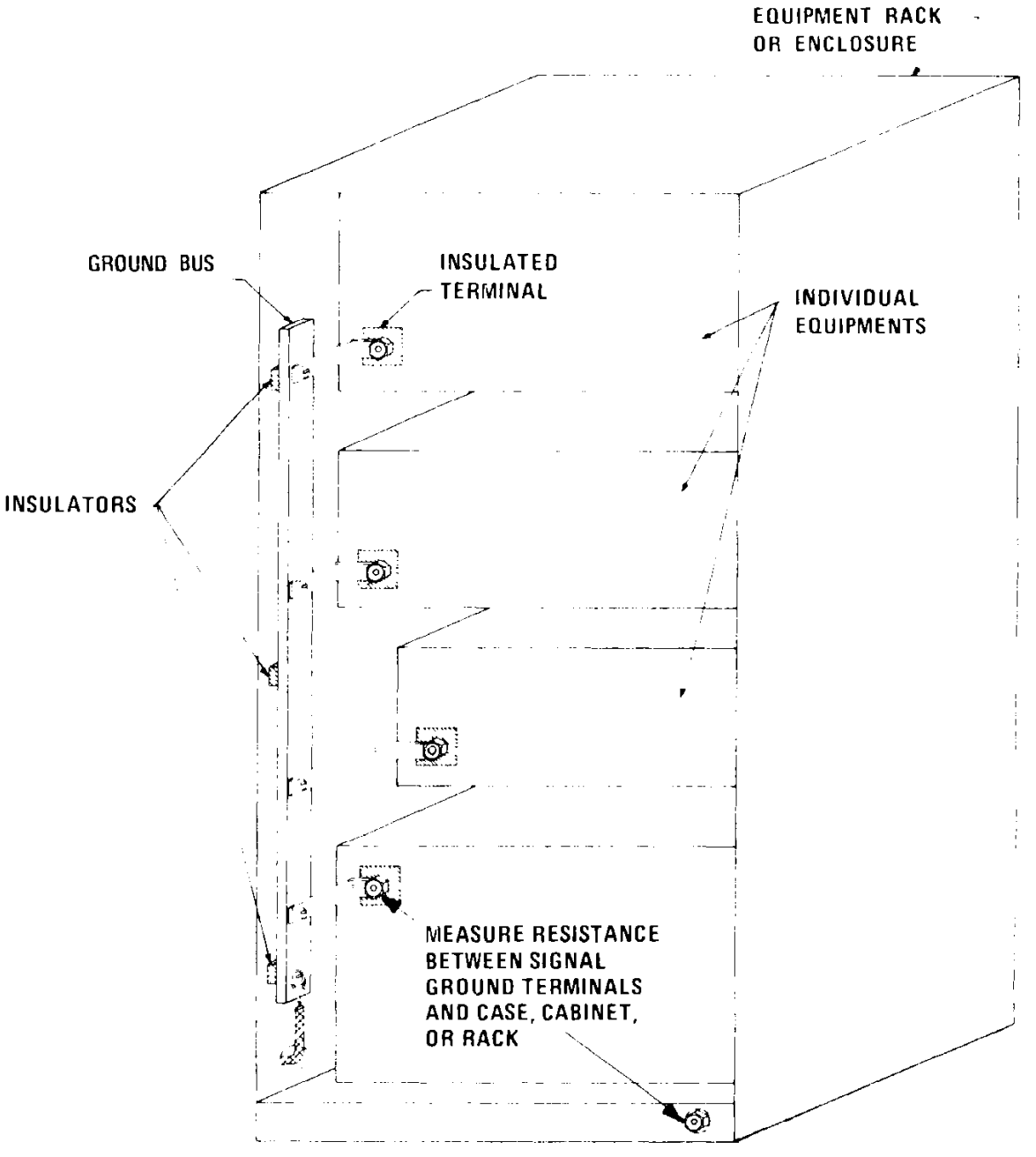

NOTE: PRIOR TO PERFORMING RESISTANCE TESTING, DISCONNECTOR UNPLUG ALL CABLES (SIGNAL, POWER, DATA, CONTROL, ETC)

Figure 3-34. Signal Ground Terminal Isolation Resistance Test for an Equipment Assembly

3.7.2 Higher Frequency Equipments.

a. Verify that higher frequency reference points and planes are directly grounded to the chassis and the equipment case to the extent permitted by circuit design requirements (and unless specified otherwise). If necessary, review Section 3.2.1.2 before inspecting the higher frequency grounds in the equipment.

b. Check to see that properly matched constant impedance cables are used for interfacing purposes. Verify that all connectors are of a type and design that provides a low impedance path from the signal line shield to the equipment case. Do not permit the use of pigtails for the termination of higher frequency line shields outside the equipment case.

c. Check connectors for tightness, cleanliness, and for proper mounting (see Sections 3.2.1.2.2 and 3.3). Measure the resistance between the connector shell or body and its mounting surface with a double balanced dc bridge as illustrated in Figure 3-35 (see Section 2.2.2.3.1 for the measurement procedure). The resistance should not exceed one milliohn. If the resistance exceeds one milliohm, the mounting surfaces should be recleaned to remove all paint, nonconductive coatings, or dirt and all screws or fasteners should be retightened to achieve a close mechanical fit.

d. Measure the point-to-point resistance between selected points on the case or cabinet with the double balanced bridge. The maximum resistance between any two points on the case or cabinet should be one milliohm or as specified. If the resistance is greater than one milliohm, check to see that all bonding surfaces are properly cleaned and that all connections are securely fastened. (Larger sized grounding cables may have to be added to reduce the resistance to one milliohm or less.)

e. Record the results of the inspection under Part I of the Inspection Form.

3.7.3 Hybrid Equipment. Before inspecting equipments utilizing both lower and higher frequency interfacing signals, review Section 3.2.1.3. If the lower and higher frequency signal networks are separate, inspect each in accordance with the preceding respective instructions. If the networks involve both lower and higher frequency signals, inspect for conformance with the higher frequency requirements. Record the results of the inspection under Part I of the Inspection Form.

3.7.4 Installed Equipments. Check to see that installed equipments, in addition, have their cases or cabinets grounded to the facility ground system of the facility with a cable providing at least 2000 cmil per running foot (or as specified) as described in Section 3.2.3. Also obtain and record the other information requested in Part II of the form.

3.7.5 Fault Protection Subsystem. Verify that all exposed metal parts of the equipment are properly grounded with the green safety wire as prescribed by MIL-STD-188-124A. The size of this wire must conform to Table 1-28 or Table 250-95 of the NEC. Convenience outlets should be grounded in the manner described in Section 3.2.2. Record all information obtained under Part III of the form.

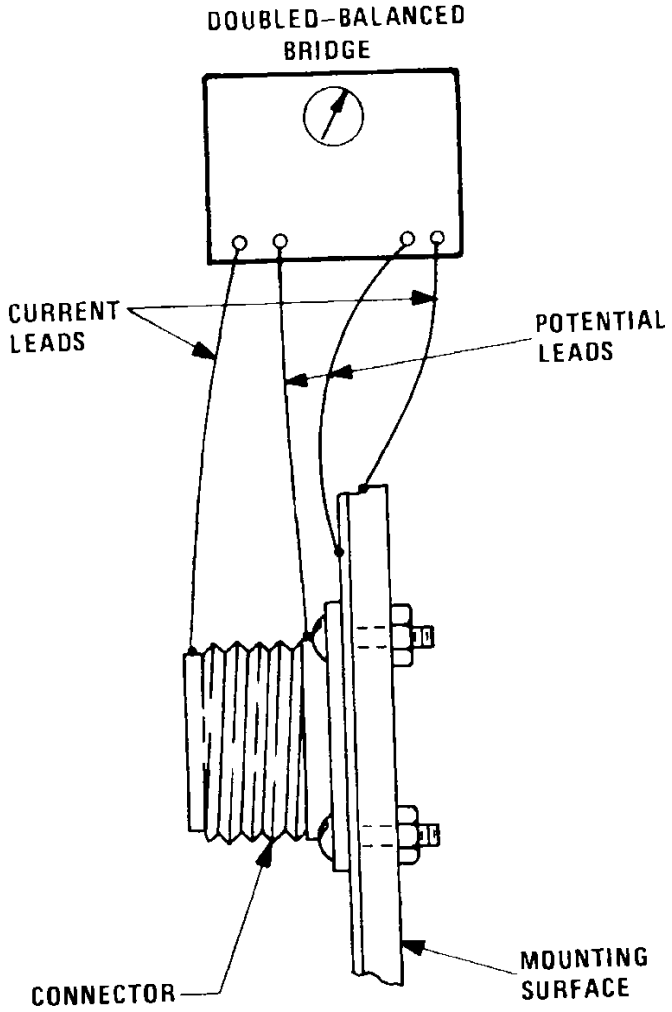

Figure 3-35. Measurement of Connector Bonding Resistance

3.7.6 Bonding.

a. Inspect all joints, seams, and connections to see that the mating surfaces were cleaned of corrosion, nonconductive finishes, and dirt prior to joining (see Section 1.7.2). Check fasteners for tightness. Have combinations of dissimilar metals been avoided (see Section 1.7.3) or, where unavoidable, have appropriate protective measures been applied (see Section 1.7.3 or Volume I, Section 7.7)?

b. Do not permit sheet metal screws or Tinnerman nuts to be used for electrical bonding.

c. Where used, do bonding jumpers generally conform to the recommendations contained in Section 3.3.h.

d. Check all bonds between subassemblies, equipments, and racks for conformance with Sections 3.3.h-n.

e. Inspect shield terminations for tight peripheral bonding to the connector shell. Such connections should be firm, offer maximized contact between the shield and the shell, and should be formed in a way that restricts the entrance of moisture and foreign matter into the bond area. Preferably bonds should be protected with an adequate weather seal.

f. Pigtail terminations should be inspected for tightness and for excessive length (see Section 3.2.1.1.7). The pigtail should only be long enough to permit the connection to be made.

g. Complete Part IV of the Inspection Form.

3.7.7 Shielding.

a. Examine the construction and layout of the equipment carefully to see if the design guidelines contained in Section 3.4 have been conscientiously considered. Be particularly alert for obvious shielding deficiencies such as poorly bonded seams; very high level (or very low level) circuits or devices with no shielding applied; use of unshielded wire extending into or out of shielded area; unprotected meters, jacks and other openings; unnecessarily large or unshielded ventilation ports; and the absence of gaskets or those which have been poorly installed.

b. Inspect gaskets for correct cleaning and preparation of the mounting and contacting surfaces. Check the gasket for firm and continuous contact with the mating surface upon closure. Does the gasket appear to offer sufficient resilience to withstand the repeated compression and release expected to be associated with the point where applied? Is the gasket and mating surface adequately protected against corrosion?

c. Complete Part V of the Inspection Form.

3.7.8 Instrumentation System.

a. Generally inspect analog systems for conformance with the recommendations presented in Section 3.5.2.1.

b. Inspect the grounding networks of digital data systems for conformance with the recommendations of Section 3.5.2.2.

3.7.9. EMP Design.

a. Has the potential threat of an EMP event been considered in the design of the equipment? (Note that most of the measures for EMP protection are also effective against lightning.) Have measures been taken to reduce magnetic pickup (see Volume I, Chapter 10)?

b. Has extra emphasis been devoted to providing effective magnetic shields over potentially susceptible devices and components?

c. Are components and devices having high degrees of immunity to EMP (and lightning) surges used where possible?

d. Are all incoming and outgoing conductors adequately protected with fast acting transient protective devices?

3.7.10 Other Observations. As appropriate, note the existence of any personnel hazards due to deficiencies of grounding, bonding, or shielding under Part VI of the Inspection Form. If appropriate to the intended use of the equipment, determine what type of lightning surge protection, if any, is provided on signal, control, or power lines associated with the equipment. Record all observations under Part VI of the Form.

3.7.11 Inspection Form.

EQUIPMENT

GROUNDING, BONDING, AND SHIELDING

Equipment Type _____

Manufacturer _____

Inspector _____ Date _____

PART I - SIGNAL GROUNDING

A. Operating Frequencies:

Function	Frequency

B. Schematic Diagram or Word Description of Signal Ground:

C. Signal Ground Terminal:

Type _____

Size _____

Location _____

D. Isolation Resistance Reading:

Signal Ground Terminal _____

AC Input Terminals _____

E. Cables and Connectors (Identify any noted deficiencies):

Location	Deficiency

PART II - INSTALLED EQUIPMENTS

A. Lower Frequency Signal Ground Lead Size _____

B. Case or Cabinet Grounding Lead Size _____

C. Resistance Between Case and Facility Ground System or Structure (five milliohms maximum) _____

PART III - SAFETY GROUND

A. Green Safety Wire Conforming to Article 250 of NEC Present? _____

B. Resistance Between Power Plug Ground Terminal and Case or Cabinet _____ (0.1 ohm maximum)

C. Other Deficiencies:

Location	Defect

PART IV - BONDS

A. Defects:

Location	Nature of Defect

B. Resistance Measurements (Identify all bonds showing greater than one milliohm resistance):

Location	Resistance

PART V - SHIELDING

Results of Shielding Inspection:

Location	Deficiency

PART VI - OTHER OBSERVATIONS

A. Personnel Hazards:

B. Surge Protection:

3.8 REFERENCES.

3-1. D.M. Baker, "Magnetic and Electrostatic Wire Coupling in the Audio Frequency Range," Report No. D-18306, Boeing Airplane Co, Seattle WA, May 1956.

3-2. R.E. Taylor, "Radio Frequency Interference Handbook," NASA -S P-3067, National Aeronautics and Space Administration, Washington DC, 1971, N72-11153-156.

3-3. "RFI Control Plan for Project Gemini Spacecraft," Genistron, Incorporated, Los Angeles CA, 24 August 1962.

3-4. C.B. Pearlston, Jr, "Electromagnetic Compatibility Requirements for Space Systems," TOR-1001 (2307)-39, Contract F04695-67-C-0158, Aerospace Corporation, El Segundo CA, December 1967.

3-5. "Instrumentation Grounding and Noise Minimization Handbook," AFRPL-TR-65-1, Consolidated Systems Corporation, Pomona CA, January 1965, AD 612 027.

3-6. "DNA EMP (Electromagnetic Pulse) handbook," DNA 211411-1, Defense Nuclear Agency, Washington DC, November 1971.

3-7. EMP Engineering Practices Handbook, NATO File No. 1460.2, October 1977.

3-8. NCS TIB 78-1, EMP Lightning and Power Transients: Their Threat and Relevance to EMP Protection Standards for Telecommunication Facilities, August 1978.

CHAPTER 4

NOTES

4.1 SUBJECT TERM (KEY WORD) LISTING. Key words contained in Volume I and Volume II of this handbook include:

Grounding
Bonding
Shielding
Facility Ground System
Lightning Protection Subsystem
Fault Protection Subsystem
Signal Reference Subsystem
Earth Electrode Subsystem
Single-Point Grounding
Multipoint Grounding
Equipotential Ground Plane
Air Terminal (Lightning Rod)
Electromagnetic Pulse (EMP)
Lower Frequency Ground
Higher Frequency Ground
Phase Conductor
Grounding Conductor (Green Wire)
Grounded Conductor
Neutral Conductor
Ring Ground
Fall-of-Potential Ground Test
Shielding Effectiveness
Zone (Cone) of Protection
Power System Grounding
Signal Grounding
Facility Shielding
Equipment Shielding
Corrosion
Down Conductor, Lightning
Cathodic Protection

APPENDIX A

GLOSSARY

ABSORPTION LOSS -- The attenuation of an electromagnetic wave as it passes through a shield. This loss is primarily due to induced currents and the associated I^2R loss.

AIR TERMINAL -- The lightning rod or conductor placed on or above a building, structure, tower, or external conductors for the purpose of intercepting lightning.

APERTURE -- An opening in a shield through which electromagnetic energy passes.

BALANCED LINE -- A line or circuit using two conductors instead of one conductor and ground (common conductor). The two sides of the line are symmetrical with respect to ground. Line potentials to ground and line currents are equal but of opposite phase at corresponding points along the line.

BOND -- The electrical connection between two metallic surfaces established to provide a low resistance path between them.

BOND, DIRECT -- An electrical connection utilizing continuous metal-to-metal contact between the members being joined.

BOND, INDIRECT -- An electrical connection employing an intermediate electrical conductor or jumper between the bonded members.

BOND, PERMANENT -- A bond not expected to require disassembly for operational or maintenance purposes.

BOND, SEMIPERMANENT -- Bonds expected to require periodic disassembly for maintenance, or system modification, and that can be reassembled to continue to provide a low resistance interconnection.

BONDING -- The process of establishing the required degree of electrical continuity between the conductive surfaces of members to be joined.

BUILDING -- The fixed or transportable structure which houses personnel and equipment and provides the degree of environmental protection required for reliable performance of the equipment housed within.

CABINET -- A protection housing or covering for two or more units or pieces of equipments. A cabinet may consist of an enclosed rack with hinged doors.

CASE -- A protective housing for a unit or piece of electrical or electronic equipment.

CHASSIS -- The metal structure that supports the electrical components which make up the unit or system.

CIRCULAR MIL -- A unit of area equal to the area of a circle whose diametel is one mil (1 mil = 0.001 inch). A circular mil is equal to $\pi/4$ or 73.54 percent of 8 square mil (1 square mil = 10^{-6} square inch). The area of a circle in circular roils is equal to the square of its diameter in mils.

CIRCUIT -- An electronic closed-loop path between two or more points used for signal transfer.

COMMON-MODE VOLTAGE -- That amount of voltage common to both input terminals of a device.

COMMON-MODE REJECTION -- The ability of a device to reject a signal which is common to both its input terminals.

CONDUCTED INTERFERENCE -- Undesired signals that enter or leave an equipment along a conductive path.

COPPER CLAD STEEL -- Steel with a coating of copper bonded on it.

COUPLING -- Energy transfer between circuits, equipments, or systems.

COUPLING, C0NDUCTED -- Energy transfer through a conductor.

COUPLING, FREE-SPACE -- Energy transfer via electromagnetic fields not in a conductor.

CUTOFF FREQUENCY -- The frequency below which electromagnetic energy will not propagate in a waveguide.

DEGRADATION -- A decrease in the quality of a desired signal (i.e., decrease in the signal-to-noise ratio or an increase in distortion), or an undesired change in the operational performance of equipment as the result of interference.

DOWN CONDUCTOR, LIGHTNING -- The conductor connecting the air terminal or overhead ground wire to the earth electrode subsystem.

EARTH ELECTRODE SUBSYSTEM -- A network of electrically interconnected rods, plates, mats, or grids installed for the purpose of establishing a low resistance contact with earth.

ELECTRIC FIELD -- A vector field about a charged body. Its strength at any point is the force which would be exerted on a unit positive charge at that point.

ELECTROMAGNETIC COMPATIBILITY (EMC) -- The capability of equipments or systems to be operated in their intended operational environment, within designed levels of efficiency, without causing or receiving degradation due to unintentional EMI. EMC is the result of an engineering planning process applied during the life cycle of equipment. The process involves careful considerations of frequency allocation, design. procurement, production. site selection, installation, operation, and maintenance.

ELECTROMAGNETIC INTERFERENCE (EMI) -- Any electrical or electromagnetic phenomenon, manmade or natural, either radiated or conducted, that results in unintentional and undesirable responses from, or performance degradation or malfunction of, electronic equipment.

ELECTROMAGNETIC PULSE (EMP) -- A large impulsive type electromagnetic wave generated by nuclear or chemical explosions.

EQUIPMENT, UNIT OR PIECE OF -- An item having a complete function apart from being a component of a system.

EQUIPMENT GROUNDING -- Attained by the grounding conductor of the fault protection subsystem, and/or bonding to the signal reference subsystem or the structural steel elements of the building.

EQUIPOTENTIAL PLANE -- A grid, sheet, mass, or masses of conducting material which, when bonded together, offers a negligible impedance to current flow. (serves as signal reference subsystem for new facilities)

FACILITY -- A building or other structure, either fixed or transportable in nature, with its utilities, ground networks, and electrical supporting structures. All wiring, cabling as well as electrical and electronic equipments are also part of the facility.

FACILITY GROUND SYSTEM -- The electrically interconnected system of conductors and conductive elements that provides multiple current paths to earth. The facility ground system includes the earth electrode subsystem, lightning protection subsystem, signal reference subsystem, fault protection subsystem, as well as the building structure, equipment racks, cabinets, conduit, junction boxes, raceways, duct work, pipes, and other normally noncurrent- carrying metal elements.

FAR FIELD -- The region of the field of an antenna where the radiation field predominates and where the angular field distribution is essentially independent of the distance from the antenna.

FAULT -- An unintentional short-circuit, or partial short-circuit, (usually of a power circuit) between energized conductors or between an energized conductor and ground.

FIRST SERVICE DISCONNECT -- The necessary equipment (circuit breakers, switches, fuses etc.) located at the point of entrance of power conductors to a building or other structure.

GROUND -- The electrical connection to earth primarily through an earth electrode subsystem. This connection is extended throughout the facility via the facility ground system consisting of the signal reference subsystem, the fault protection subsystem, the lightning protection subsystem and the earth electrode subsystem.

GROUNDED CONDUCTOR -- (Neutral) The circuit conductor that is intentionally grounded (at first service disconnect or power source).

GROUNDING CONDUCTOR -- (Green Wire) A conductor used to connect equipment or the grounded circuit of a power system to the earth electrode subsystem.

HIGHER FREQUENCY GROUND -- The interconnected metallic network intended to serve as a common reference for currents and voltages at frequencies above 30 kHz and in some cases above 300 kHz. Pulse and digital signals with rise and fall times of less than 1 microsecond are classified as higher frequency signals.

INTERFACE -- Any electrical connection (encompassing power transfer, signaling, or control functions) between two or more equipments or systems.

ISOKERAUNIC (or isoceraunic) -- Showing equal frequency of thunderstorms.

ISOLAT1ON -- Physical and electrical arrangement of the parts of an equipment, system, or facility to prevent uncontrolled electrical contact within or between the parts.

LIGHTNING PROTECTION SUBSYSTEM -- A complete subsystem consisting of Air Terminals, interconnecting conductors, ground terminals, arresters and other connectors or fitting required to assure a lightning discharge will be safely conducted to earth.

LOWER FREQUENCY GROUND -- A dedicated, single-point network intended to serve as a reference for voltages and currents, whether signal, control or power, from dc to 30 kHz and some cases to 300 kHz. Pulse and digital signals with rise and fall times greater than 1 microsecond are considered to be lower frequency signals.

MAGNETIC FIELD -- A vector field produced by a continuous flow of charge.

MULTIPOINT GROUND -- More than one path to ground.

NATIONAL ELECTRICAL CODE (NEC) -- A standard governing the use of electrical wire, cable, and fixtures installed in buildings. It is sponsored by the National Fire Protection Association (NFPA-70) under the auspices of the American National Standards Institute (ANSI-CI).

NEAR FIELD -- The region of the field immediately surrounding an antenna where the inductive and capacitive fields predominate. In this region the angular distribution of the field varies with distance from the antenna.

NEUTRAL -- The ac power system conductor which is intentionally grounded on the suppy side of the first service disconnecting) means. It is the low potential (white) side of a single phase ac circuit or the low potential fourth wire of a three-phase wye distribution system. The neutral (grounded conductor) provides a current return path for ac power currents whereas the grounding (or green) conductor does not, except during fault conditions.

PENETRATION -- The passage through a partition or wall of an equipment or enclosure by a wire, cable, or other conductive object.

PLANE WAVE -- An electromagnetic wave which predominates in the far field region of an antenna, and with a wavefront which is essentially in a flat plane. In free space, the characteristic impedance of a plane wave is 377 ohms.

RACK -- A vertical frame on which one or more units of equipment are mounted.

RADIATION -- The emission and propagation of electromagnetic energy through space.

RADIATION RESISTANCE -- The resistance which, if inserted in place of an antenna, would consume the same amount of power that is radiated by the antenna.

RADIO FREQUENCY INTERFERENCE (RFI) -- RFI is manmade or natural, intentional or unintentional electromagnetic propagation which results in unintentional and undesirable responses from or performance degradation or malfunction of, electronic equipment.

REFLECTING LOSS -- The portion of the transition loss, expressed in dB, that is due to the reflection of power at a barrier or shield. Reflection loss is determined by the magnitude of the wave impedance inside the barrier relative to the wave impedance in the propagation medium outside the barrier.

RF-TIGHT -- Offering a high degree of electromagnetic shielding effectiveness.

SHIELD -- A housing, screen, or cover which substantially reduces the coupling of electric and magnetic fields into or out of circuits or prevents the accidental contact of objects or persons with parts or components operating at hazardous voltage levels.

SHIELDING EFFECTIVENESS -- A measure of the reduction or attenuation in the electromagnetic field strength at a point in space caused by the insertion of a shield between the source and that point.

SIGNAL REFERENCE SUBSYSTEM -- A conductive sheet or cable network/mesh providing an equipotential reference for C-E equipments to minimize interference and noise.

SIGNAL RETURN -- A current-carrying path between a load and the signal source. It is the low side of the closed loop energy transfer circuit between a source-load pair.

STRUCTURE -- Any fixed or transportable building, shelter, tower, or mast that is intended to house electrical or electronic equipment or otherwise support or function as an integral element of an electronics complex.

SUPPORTING STRUCTURES, ELECTRICAL -- Normally nonelectrified conductive structural elements near to energized electrical conductors such that a reasonable possibility exists of accidental contact with the energized conductor. Examples are conduit and associated fittings, junction and switch boxes, cable trays, electrical/electronic equipment racks, electrical wiring cabinets, and metallic cable sheaths.

TRANSDUCER -- A device which converts the energy of one transmission system into the energy of another transmission system.

THUNDERSTORM DAY -- A local calendar day on which thunder is heard.

UNDESIRED SIGNAL -- Any signal which tends to produce degradation in the operation of equipments or systems.

WAVE IMPEDANCE -- The ratio of the electric field strength to the magnetic field strength at the point of observation.

ZONE OF PROTECTION -- (also known as CONE OF PROTECTION) That space that is below and adjacent to a lightning protection subsystem that is substantially immune to direct lightning discharges.

APPENDIX B

SUPPLEMENTAL BIBLIOGRAPHY

PART I. SUBJECT CROSS REFERENCE.

BONDING -- 13, 15, 28, 29, 30, 32, 39, 45, 54, 60, 61, 76, 91, 96, 113, 120, 129, 159, 161, 199, 203, 207, 208.

CATHODIC PROTECTION -- 10, 43, 51, 55, 94, 108, 136, 144, 168, 169, 176.

CORROSION -- 8, 53, 56, 63, 75, 124, 143, 144, 164, 168, 169, 214.

EARTH ELECTRODE SUBSYSTEMS -- 11, 24, 25, 31, 33, 44, 51, 52, 63, 64, 65, 66, 70, 71, 85, 86, 87, 89, 101, 107, 120, 131, 137, 138, 145, 148, 170, 187, 190, 196, 205, 212, 213.

EMP -- 37, 47, 57, 58, 67, 68, 73, 74, 114, 128, 139, 140, 141, 150, 156, 163, 186, 202.

EQUIPMENT SHIELDING -- 3, 6, 7, 9, 14, 35, 36, 40, 41, 46, 49, 78, 83, 84, 90, 97, 99, 103, 109, 112, 115, 116, 122, 127, 133, 134, 135, 146, 151, 152, 153, 158, 159, 172, 173, 174, 175, 180, 184, 194, 198, 204, 211.

FACILITY SHIELDING -- 9, 15, 82, 110, 115, 158, 183, 184, 203.

LIGHTNING PROTECTION -- 2, 5, 12, 16, 20, 21, 22, 23, 24, 26, 31, 69, 79, 80, 102, 120, 130, 147, 149, 154, 166, 179, 182, 185, 197, 200, 201, 209.

PERSONNEL SAFETY -- 20, 42, 44, 50, 66, 77, 80, 81, 95, 104, 117, 118, 119, 120, 121, 125, 142, 171, 191, 193.

POWER SYSTEMS GROUNDING -- 1, 4, 17, 18, 19, 34, 38, 62, 72, 92, 93, 95, 98, 100, 105, 106, 111, 117, 120, 123, 126, 132, 155, 160, 162, 165, 167, 177, 178, 181, 188, 195, 210.

SIGNAL GROUNDING -- 27, 42, 48, 49, 59, 72, 88, 109, 120, 159, 189, 192, 198, 203, 204, 206.

PART II. LISTINGS.

1. Adama, A. W. D. and Lintott, A. P., "Digital Programme for the Calculation of Earthing Systems Using Concentric Rings," De Ingenieur (Hague), Vol 83, No. 20, May 1971, pp E51-56.

2. Adams, Nixon A., "Introduction to Lightning and Other Electrostatic Phenomena," AWS-TR-224, Air Weather Service, Scott AFB IL, August 1971, AD 730 622.

3. Adams, W. S., “Graphical Presentation of Electromagnetic Shielding Theory,” Proceedings of the Tenth Tri-Service Conference on Electromagnetic Compatibility, ITT Research Institute, Chicago IL, November 1964, pp 421-449, AD 615627.

4. AIEE Committee Report, “Application Guide on Methods of Substation Grounding,” AIEE Trams., Vol 73, Pt IIIA, April 1954, pp 271-277.

5. AIEE Committee on Protection Devices, “Correlation of System Overvoltages and Systems Grounding Impedances,” AIEE Trans., Vol 62, January 1943, pp 17-24.

6. Albin, Arnold L., “Applying Shielded Cables to Reduce Interference,” Electronic Design, Vol 10, No. 1, January 1962, pp 48-51.

7. Albin, Arnold L. “Designing Noise Free Enclosure Openings,” Electronics, Vol 31, No. 35, August 1958, p 48.

8. Anderson, D. G., "Corrosion," Journal of Electronics and Control, Vol 5, November 1958, pp 443-456.

9. Angelakos, D.J., “Radio Frequency Shielding Properties of Metal Honeycomb Materials and of Wire Mesh Enclosure,” Unclassified Proceedings of the Sixth Conference on Radio Interference Reduction and Electronic Compatibility, Armour Research Foundation of Illinois Institute of Technology (now IITRI), Chicago IL, October 1960, pp 265-280.

10. Appleman, G. and Litrides, S.J., “All Steel Network Ground Substation,” Electrical World, Vol 143, May 1955, pp 59-61.

11. Armstrong, H. R., “Grounding Electrode Characteristics from Model Tests,” AIEE Trans, Vol 72, Pt III, December 1953, pp 1301-1306.

12. Arrowsmith, E. G., “Lightning Prediction and Protection Techniques,” Tor-669(6540)-4, Contract AF 04(695)-669, Aerospace Corporation, El Segundo CA, October 1965, AD 474610.

13. Bailey, J.C. and Gregory P., “Fundamentals of Jointing Processes for Aluminum,” Symposium on Aluminum and Its Alloys in Electrical Engineering, Aluminum Development Association, London, nay 1957, pp 39-56.

14. Barker, G. and Gray, E., “Preliminary Measurements Related to Procedures for Measuring Systems Susceptibility,” Proceedings of the Eighth Tri-Service Conference on Electromagnetic Compatibility, Armour Research Foundation of Illinois Institute of Technology (now IITRI), Chicago IL, October 1962, pp 218-240, AD 298 763.

15. Barnett, J. and Burrows, D., "Interference Problems Due to Structure in High R. F. Fields,” Rpt No. C-24-F, Contract AF 30(602)-2691, White Electromagnetic, Inc, Bethesda MD, February 1963, AD 299 257.

16. Beck, Edward, “How and Where to Provide For Lightning Protection,” Maintenance Magazine, October 1966, pp 28-31.

17. Bellaschi, P. L., "Impulse and 60-Cycle Characteristics of Driven Grounds," AIEE Trans., Vol 60, March 1941, pp 123-128.

18. Bellaschi, P. L., Armington, R.E., and Snowden, A. E., "Impulse and 60-Cycle Characteristic of Driven Grounds--II," AIEE Trans., Vol 61, June 1942, pp 349-363.

19. Bellaschi, P. L. and Armington, R. E., "Impulse and 60-Cycle Characteristics of Driven Grounds--HI, Effect of Lead in Ground Installation," AIEE Trans., Vol 62, June 1943, pp 334-344.

20. Berio, G., "The Use of Ionization in The Air for Lightning Protection," Isotopes and Radiation Technology, Vol 8, No. 2, Winter 1970-71.

21. Beville, J. W., "Multiple Lightning Strokes Change Relay Schemes," Electrical World, Vol 168, No. 23, December 1967, pp 29-31, 73.

22. Bewley, L. V., "Critique of Ground Wire Theory," AIEE Trans, Vol 50, No. 1, March 1931, pp 1-22.

23. Bewley, L. V., "The Counterpoise," General Electric Review, Vol 37, No. 2, February 1934, pp 73-81.

24. Bewley, L.V., "Theory and Tests of the Count erpoise," Electrical Engineering, Vol 53, No. 8, August 1934, pp 1163-1172.

25. Bliamptis, E. E., "A New Method of Determining the Physical Parameters of Large Soil and Rock Samples in Situ," AFCRL-72-O734, Contract CDNA0007 76390101, Air Force Cambridge Research Laboratories, Bedford MA, December 1972, AD 756 830.

26. Bodle, D., "Electrical Protection Guide for Land-Based Radio Facilities," Joslyn Electronic Systems, Santa Barbara Research Park, PO Box 817, Goleta CA 93017, 1971.

27. Boise, W. K. and Hunter, E. M., "System Electrical Neutral Grounding," Electrical Light and Power, Vol 21, November 1943, pp 44-49.

28. Bond, N. T. and McGeary, F. L., "Nickel Plating for Improved Electrical Contact to Aluminum," Conference Record of Third Annual Meeting of the IEEE Industry and General Applications Group, Chicago IL, October 1968, pp 375-387.

29. "Bonding and Grounding, Standard for," KSC-STD-E-0012, NASA, John F. Kennedy Space Center, Kennedy Space Center FL 32899, December 1969.

30. Bonwitt, W. F., "An Experimental Investigation of the Electrical Performance of Bolted Aluminum-to-Copper Connections," AIEE Trans, Vol 67, Pt II, 1948, pp 1208-1219.

31. Boyce, C. F., "The Earthing of Telephone Systems with Particular Reference to South Africa," Transactions of the S.A. Institute of Electrical Engineers, Vol 43, December 1952, pp 349-373.

32. Boyer, O.A. and Korges, E., "Connector Performance by Types," AIEE Trans, Vol 75, Pt III, October 1956, pp 907-913.

33. Braine, M. R., "The Siting of Station Earths for Telecommunication Installations," Point-to-Point Telecommunications, Vol 13, No. 1, January 1969, pp 47-56.

34. Bremer, G. D., Johnson, I. B., and Lyon, S. V., "Grounding of Subtransmission Systems," AIEE Trans, Vol 73, Pt III, February 1955, pp 1580-1585.

35. Bridges, J. E., "Study of Low-Frequency Fields for Coaxial and Twisted Pair Cables," Proceedings of the Tenth Tri-Service Conference on Electromagnetic Compatibility, IIT Research Institute, Chicago IL, November 1964, pp 475-495, AD 615627.

36. Brogdon, A. M., Cook, J. C., and Douds, C. F., "A Survey of Interference Reduction Techniques," RADC-TDR-62-84, Contract AF 30(602)-2445, HRB-Singer, Inc, State College PA, June 1962, AD 277 558.

37. Brown, G. L., "Some Aspects of EMP Hardness Assurance," PEM-23, Available from the USAEC Technical Information Center, PO Box 62, Oak Ridge TN 37830.

38. Brown, Harold H, and Gross, Eric T. B., "Practical Experience with Resonant Grounding in a Large 34.5 Kv System," AIEE Trans, Vol 69, Pt II, 1950, pp 1401-1406.

39. Brunot, A.W. and Buckland, F. F., "Thermal Contact Resistance of Laminated and Machined Joints," Transactions of the American Society of Mechanical Engineers, Vol 71, April 1949, pp 253-257.

40. Burruano, S.J., Bailey, E. F., and Cramer S., "Shielding and Potting," Electronics, Vol 27, No. 10, October 1954, p M-23.

41. Carlson, K. W., "The Effect of Weld Defects on RFI Shielding Effectiveness," IAO CE-CERL-73-2, Construction Engineering Research Laboratory, Champaign IL, January 1974, AD 733716.

42. Carpenter, L.J., "Equipment Grounding for Industrial Plants," Electrical Engineering, Vol 73, No. 3, March 1954, pp 256-260.

43. "Cathodic Protection of Communication Cables," Technical Manual KSC-TM4-275-M1, NASA, John F. Kennedy Space Center, Kennedy Space Center FL 32899, March 1972.

44. Cave, P. W., "Earthing Practice," Electrical Review, Vol 153, No, 15, October 1953, p 793.

45. Cherry, Lloyd B., "Dynamic Resistance Test of Spot Welds," IEEE Trans on Communication and Electronics, Vol 82, May 1963, pp 121-123.

46. Clark, D.B. and Hitchcock, R.D., "Continuous Wrapping of Transmission Line Conductors with High-Mu Tape For Large Radio-Interference Attenuation," Unclassified Proceedings of the Fifth Conference on Radio Interference Reduction and Electronic Compatibility, Armour Research Foundation of Illinois Institute of Technology (now IITR1), Chicago IL, October 1959, pp 560-577.

47. Clark, D.B. and Lassiter, H.A., "Nuclear Electromagnetic Pulse (NEMP) Protection for Communications Facilities and Equipment," 1968 WESCON Proceedings, Vol 12, Pt 4, Session 19/4, IEEE, New York NY.

48. Clifton, Harvey W., "Design Your Grounding System, " IDEE Trans on Aerospace, Vol 2, No. 2, April 1964, pp 589-596.

49. Coe, James C., "Electrical Interference in Instrumentation - Its Causes and Remedies (Parts 1 and 2)," ISA Journal, November 1954, pp 49-50 (Part 1), and December 1954, pp 33-35 (Part 2).

50. Coleman, O. K., "Why Ground," Electrical Engineering, Vol 75, No. 5, May 1956, pp 418-424.

51. Coleman, W.E. and Frostick, H. G., "Electrical Grounding and Cathodic Protection at the Fairless Works," AIEE Trans, Vol 74, Pt II, March 1955, pp 19-24.

52. "Comparative Properties of Grounding Electrodes," Engineering Reference Sheet No. 48-5, Electrical World, Vol 129, January 1948, p 72.

53. Compton, K. G., "Electrical Measurements and Their Interpretation In Underground Cable Corrosion Problems," Corrosion, Vol 14, No. 5, May 1958, pp 237t - 244t.

54. Connor, T.J. and Wilson, W. R., "Performance of Electrical Joints Utilizing New Silver Coating on Aluminum Conductors," AIEE Trans, Vol 72, Pt III, August 1953, pp 702-712.

55. "Control of External Corrosion on Underground or Submerged Metallic Piping Systems, Recoin mended Practice," NACE Standard RP-01-69, National Association of Corrosion Engineers, 2400 West Loop South, Houston TX 77027.

56. "Corrosion Control Aspects of Underground Residential Electrical Distribution Systems," Materials Protection and Performance, Vol 10, No. 1, January 1971, pp 38-40.

57. Dahnke, J. E., "Considerations and Techniques in Allotment of EMP Protection Requirements to Subsystem End Items in Well-Shielded Ground-Based Systems," TRW Inc, San Bernardino CA. Copies available from USAEC Technical Information Center, PO Box 62, Oak Ridge TN 37830.

58. Davidson, G.G. and Hunter, E.T., "Characterization of EMP Protection Devices," ECOM-4128, US Army Electronics Command, Fort Monmouth NJ, July 1973, AD 763886.

59. Demrow, R.I., "Protecting Data from the Ground Up." Electronics, Vol 41, No. 9, April 1968, pp 58-64.

60. Dimarzio, Alfred W., "Behavior of Conductive Epoxy for Shielding and Bonding," Frequency Technology, Aug/Sept 1970, pp 18-23.

61. Dixon, C.R. and Nelson, F. G., "The Effect of Elevated Temperature of Flash-Welded Aluminum Copper Joints," AIEE Trans, Vol 78, Pt II, 1959, pp 491-495.

62. Dorey, F. M., "System Grounding in Industrial Plants," Electrical Engineering, Vol 72, No. 2, December 1953, pp 1098-1103.

63. Drisko, R.W. and Hanna, A. E., "Field Testing of Electrical Grounding Rods," NC EL-T R-660, Naval Civil Engineering Laboratory, Port Hueneme CA, February 1970, AD 702 040.

64. Dwight, H. B., "The Calculation of Resistances to Ground and of Capacitance," Journal of Math Physics, Vol 10, 1931, pp 50-74.

65. Eaton, J. R., "Grounding Electric Circuits Effectively," General Electric Review, Vol 44, Nos. 6, 7, and 8, June 1941, pp 323-327, July 1941, pp 397-404, August 1941, pp 451-456.

66. Elek, A., "Proving the Adequacy of Station Grounds," AIEE Trans, Vol 44, June 1941, pp 323-327.

67. EMP (Electromagnetic Pulse) Preferred Test Procedures, DNA 3286H, Contract No. DNA 001-72-C-0089, IIT Research Institute, 10 West 35th Street, Chicago IL 60616, August 1974, AD 787 482.

68. "EMP Threat and Protective Measures, " TR-61, Defense Civil Preparedness Agency, Washington DC 20301, August 1970.

69. Erickson, J., "Lightning and High Voltage Surge Protection for Balanced Digital Transmission Devices," ECOM-4027, US Army Electronics Command, Fort Monmouth NJ, September 1972, AD 752448.

70. Fagan, E.J. and Lee, R. H., "Use of Concrete-Enclosed Reinforcing Rods as Grounding Electrodes," IEEE Trans on Industry and General Applications, Vol IGA-6, No. 4, July/August 1970, pp 337-348

71. Fawssett, E., et al., "Practical Aspects of Earthing," Journal of the IEE, Vol 87, No. 526, October 1940, pp 357-400.

72. Ficchi, Rocco F., "The Grounding of Electronic Equipment," Proceedings of the Eighth Tri-Service Conference on Electromagnetic Compatibility, Armour Research Foundation of Illinois Institute of Technology (now IITRI), Chicago IL, October 1962, pp 643-669, AD 298763.

73. Fiegal, H. E., et al., "Development of Design Criteria Relating to NEMP Effects on Power Systems. Part I. Conductor Voltages Causes by Pulse Currents Flowing in a Steel Conduit," Contract No. DA-49 -129 -EN G-543, General Electric Company, Pittsfield MA, August 1965, AD 734083.

74. Fiegal, H.E., "Development of Design Criteria Relating to NEMP Effects on Power Systems. Part II. Conductor Voltages Caused by Pulse Currents Flowing in a Conduit," Contract No. DA-49-129-ENG-543, General Electric Company, Pittsfield MA, January 1966, AD 734084.

75. Fiorito, L.E., "Corrosion Aspects of HV DC on Buried Telephone Plant," IEEE Trans on Power Apparatus and Systems, Vol PAS-87, No. 1, January 1968, pp 35-40.

76. Flattau, W., "Radio Frequency Bonding Study," Report No. AO 1801, Contract NAS8-20055, Documentation Repository, "Marshall Space Flight Center AL 35812.

77. Flippen, J.C., "Line Mock Up Aids Safe Grounding Sessions," Electrical World, Vol 170, NO. 13, September 1968, p 31.

78. Follett, Roger C. and Beard, Lawrence, "Development of Extended Range Shielded Enclosures," Sprague Electric Company, North Adams MA, Technical Paper Tp 69-9, 1969.

79. Foster, S. A., "A Lightning Protection Unit For Use with Industrial Process Control Equipment, " IEE Conference Publication, No. 65, 1970, pp 43-45.

80. Golde, R.H., "A Plain Man's Guide To Lightning Protection," Electronics and Power, Vol 15, March 1969, pp 84-86.

81. Golde, R. H., "Protection of Structures Against Lightning," Proc. IEE, Vol 115, No. 10, October 1968, pp 1523-1529.

82. Good, T. M., "A Method of Evaluating The Effectiveness of Radio-Frequency Gasket Materials," Unclassified Proceedings of the Fifth Conference on Radio Interference Reduction and Electronic Compatibility, Armour Research Foundation of Illinois Institute of Technology (now IITRI), Chicago IL, October 1959, pp 601-621.

83. Gooding, J.H. and Glade, H.B., "Shielding of Communications Cables," AIEE Trans, Vol 74, July 1955, pp 378-387.

84. Griffith, David E., "Surface Transfer Impedance of Cable Shields Having a Longitudinal Seam," IEEE Trans on Communication Technology, Vol COM-19, No. 4, August 1971, pp 517-522.

85. Gross, Eric T. B., et al., "Grounding Grids for High-Voltage Stations," AIEE Trans, Vol 72, Pt III, August 1953, pp 799-809.

86. Gross, Eric T.B. and Hollitch, Robert S., "Grounding Grids for High-Voltage Stations - Resistance of Rectangular Grids," AIEE Trans, Vol 75, Pt III, 1947, October 1956, pp 926-935.

87. Gross, Eric T.B. and Wise, Richard B., "Grounding Grids for High-Voltage Stations - Resistance of Large Rectangular Plates," AIEE Trans., Vol 74, Pt III, October 1955, pp 801-809.

88. "Grounding of Instrument Transformer Secondary Circuits," AIEE Trans, Vol 66, 1947, pp 419-420.

89. Gupta, V. P. and Gary, R. L., "Earth Resistance of Various Forms of Electrodes," Proc. IEE, Vol 116, No. 8, August 1969, pp 1487-1492.

90. Haber, F. and Goldhirsh, J., "Studies of Electromagnetic Compatibility of Equipment and Systems," Rpt No. 61-11, Contract Nobsr-85170, Moore School of Electrical Engineering, U. of Pennsylvania, Philadelphia PA, 1961, AD 261048.

91. Hamada, Yoshia, et al., "Welded Joint and Termination for Aluminum Power Cables," Hitachi Rev., Vol 20, No. 11, 1971, pp 465-471.

92. Harrison, L. H., "The Effect of Reactive Components in the Measurements of Grounding Circuits," AIEE Trans, Vol 72, Pt II, November 1953, pp 340-345.

93. Harrison, L. H., "The Search for Better Frame-Grounding Methods," Coal Age, February 1955, pp 84-87.

94. Headlee, J. E., "Cathodic Protection For Steel Mill Grounding Systems," Iron and Steel Engineer, Vol 31, No. 3, March 1954, pp 113-115.

95. Heddesheimer, H. E., "A Compendium of Grounding Techniques for Personnel and Equipment Protection," AIEE Trans, Vol 76, Pt III, February 1958, pp 1225-1230.

96. Heller, Fred, "Compression Wye Splicing to Insulated Aluminum," AIEE Trans, Vol 73, Pt 11113, October 1954, pp 1218-1223.

97. Herring, T. H., "A Method for Controlling Airplane Wiring and Equipment Placement to Eliminate A-C Magnetic Field Interference," Proceedings of the Fourth Conference on Radio Interference Reduction and Electronic Compatibility, Armour Research Foundation of Illinois Institute of Technology (now IITRI), Chicago IL, October 1958, pp 412-430.

98. Herring, T. H., "The Electrical Role of Structure in Large Electronic Systems," 1963 Symposium Digest, Fifth National Symposium on Radio Frequency Interference, IEEE, New York NY, June 1963.

99. Herring, T. H., "Controlling Magnetic Field Interference In Wiring," Electrical Manufacturing, Vol 64, No. 4, October 1959, pp 127-129.

100. Hertzberg, Lee B., "The Water Utilities Look at Electrical Grounding," IEEE Trans on Industry and General Applications, Vol IGA-6, No. 3, May/June 1970, pp 278-281.

101. Higgs, P.J., "An Investigation of Earthing Resistances," Journal of the IEE, Vol 68, February 1930, pp 736-750.

102. "High Voltage Lightning Grounding Device," Brief 71-10136, Lewis Research Center, May 1971. Copies available from Technology Utilization Office, NASA, Code KT, Washington DC 20546.

103. Hill, E.L., "The Shielding of Radio Waves by Conductive Coatings," IEE Trans on Antennas and Propagation, Vol 3, No. 2, April 1955, pp 72-76.

104. Hopps, J. A., "Electrical Hazards in Hospital Instrumentation," Proceedings of the 1969 Symposium on Reliability, Chicago IL, January 1969, pp 303-307.

105. Hoopes, J. E., "Modernize Substation Grounding Practice," Electrical WorId, Vol 150, No. 8, August 1958, pp 66-67.

106. "How Good Are Your System Grounds?" Power, Vol 100, No. 10, October 1956, pp 120-121.

107. Humpheries, J. D., "Earth-Electrode Systems for Large Electric Stations," Proc. IEE, Vol 104, Pt A, October 1957, pp 383-399.

108. Husock, B., "The Effect of Electrical Grounding Systems on Under-Ground Corrosion and Cathodic Protection," AIEE Trans, Vol 79, Pt II, March 1960, pp 5-10.

109. Ida, Edward S., "Reducing Electrical Interference," Control Engineering, Vol 9, No. 2, February 1962, pp 107-111.

110. Jakubee, L. G., Jr, et al., "Preposed Specifications for Electromagnetic Shielding of Enclosures and Buildings," Contract NBY-32220, Genistron, Inc, Los Angeles CA, July 1963.

111. Jensen, Claude, "Grounding Principles and Practices II - Establishing Grounds," Electrical Engineering, Vol 64, No. 2, February 1945, pp 68-74.

112. Jorgenson, C. M., "Shielding in Modern Computer Design," Automatic Control, Vol 9, No. 6, December 1958, pp 46-50.

113. "Junctions in Aluminum Cable," Light Metals, Vol 5, No. 57, October 1942, pp 388-395.

114. Kalab, B., "Analysis of Failure of Electronic Circuits From EMP-Induced Signals," HDL-TR-1615, Harry Diamond Laboratories, Washington DC 20438, August 1973, AD 778754.

115. Kanellakos, D. P., et al., "New Techniques for Evaluating the Performance of Shielded Enclosures," Unclassified Proceedings of the Fifth Conference on Radio Interference Reduction and Electronic Compatibility, Armour Research Foundation of Illinois Institute of Technology (now IITR1), Chicago IL, October 1959, pp 526-559.

116. Kaplit, M., "Electromagnetic Coupling Between Coaxial Single-Wire, Two-Wire, and Shielded Twisted Pair Cables," Proceedings of the Ninth Tri-Service Conference on Electromagnetic Compatibility, IIT Research Institute, Chicago IL, October 1963, pp 183-192, AD 434850.

117. Kaufmann, R. H., "Equipment Grounding Is It Really Protecting Your Plant?" Power, Vol 99, No. 2, February 1955, pp 77-80.

118. Kaufmann, R. H., "Hazards In Industrial Electric Systems," Safety Maintenance and Production, Vol 108, No. 2, August 1954, p 26.

119. Kaufmann, R. H., "Now It's Equipment Grounding," Factory Management and Maintenance, Vol 115, No 12, December 1957, pp 150-153.

120. Keller, W. L., "Grounding and Bonding Requirements of Military C-E Facilities for Protection Against Lightning," International Aerospace and Ground Conference on Lightning and Static Electricity, June 1984, Orlando FL, pp 18-1 to 18-20.

121. Kline, R. L. and Friauf, J. B., "Electric Shock, Its Causes and Its Prevention," BuShips Journal, July 1954, pp 4-14.

122. Klingaman, G. W. and Williams, G. H., "Shielding of Dielectric Heating Installation," Electronics, Vol 18, May 1945, pp 106-109.

123. Krida, H. and McCurry, E.T., "A New Grounding and Testing Device for Metal-Clad Switchgear," AIEE Trans., Vol 69, Pt I, 1950, pp 401-415.

124. Kuhn, R.J., "Grounding and Corrosion Protection on Underground Electric Power Cable Sheaths and Oil- or Gas-Filled Pipe Lines," AIEE Trans, Vol 71, Pt III, December 1952, pp 990-993.

125. Lee, R. H., "Electrical Grounding: Safe or Hazardous?" Chemical Engineering, Vol 76, No 16, July 1969.

126. Loucks, W.W. and Lemire, W. A. R., "Transmission and Distribution Grounding in the Hydro-Electric Power Commission of Ontario," AIEE Trans, Vol 70, Pt II, 1951, pp 1493-1499.

127. Madden, Charles, "EMI Shielding with Electrically Conductive Pressure Sensitive Tapes," Proceedings of the Eighth Electrical Insulation Conference, IEEE 68C6-EI, IEEE, New York NY, December 1968, pp 25-27.

128. Marable, J. H., et al., "Effects of Electromagnetic Pulse (EMP) on a Power System," Interaction Note 173. Available through Air Force Weapons Laboratory, Kirtland AFB NM 87117.

129. Marx, C.T., "Some Problems of Aluminum Connection," Electrical Energy, Vol 1, No. 4, December 1956, pp 109-112.

130. McCann, G. D., Beck, E., and Finzi, L. A., "Lightning Protection For Rotation Machines," AIEE Trans, Vol 63, June 1944, pp 319-332.

131. McCrocklin, A.J., Jr and Wenlandt, C. W., "Determination of Resistance to Ground of Grounding Grids," AIEE Trans, Vol 71, Pt III, December 1952, pp 1062-1064.

132. McGreer, T. H., "Grounding of Power Station 4, 160-Volt Auxiliary Systems," AIEE Trans, Vol 76, Pt III, February 1958, pp 1459-1463.

133. Mendez, H. A., "Shielding Theory of Enclosures with Apertures," AFOSR-TR-O1OO, Contract AFOSR-70-1935, California Institute of Technology, Pasadena CA, December 1973, Al) 773 770.

134. Merewether, David E., "Design of Shielded Cables Using Saturable Ferromagnetic Materials," IEEE Trans on Electromagnetic Compatibility, Vol EMC-12, No. 3, August 1970.

135. Merrel, Edwin J., "Semi conducting Shielding for A-C Power Cable," AIEE Trans., Vol 65, August/September 1946, pp 605-608.

136. Morgan, J. H., Cathodic Protection, Leonard Hill (Books) Limited, London, 1959,

137. Morgan P. D. and Taylor, H. G., "Measurement of the Resistance of Earth Electrodes," World Power, Vol 32, No. 121, January 1934, pp 22-26.

138. Morgan, P.D. and Taylor, H. G., "The Resistance of Earth Electrodes," Proc IEE, Vol 72, June 1932, pp 515-518.

139. Nelson, D. B., "A Program to Counter the Effects of Nuclear Electromagnetic Pulse in Commercial Power Systems," Report No. ORNL-TM-3552 (Pt 1), Oak Ridge National Laboratory, Oak Ridge TN 37830, October 1972. Available from National Technical Information Service, Springfield VA 22151.

140. Nelson, D. B., "Effects of Nuclear EMP on AM Broadcast Stations in the Emergency Broadcast System," Report No. ORNL-TM-2830, Oak Ridge National Laboratory, Oak Ridge TN 37830, July 1971, AD 717 319.

141. "NEMP Protection Inspection Guide for Safeguard TSE Systems and Equipment," HNDDSP-71-42-SE, US Army Corps of Engineers, Huntsville Division, Huntsville, AL 35807, May 1971.

142. Nueland, J. G., "Electrical Shock and Reliability Considerations in Clinical Instruments," Proceedings of the 1969 Symposium on Reliability, Chicago IL, January 1969, pp 308-313.

143. Nonken, G. C., et al., "Corrosion of URD Cables," Electrical World, Vol 171, No. 18, May 1969, pp 88-106.

144. Nonken, Gordon C., "Fundamentals of Corrosion and Corrosion Control for Residential Subsurface Transformers," IEEE Trans on Power Apparatus and Systems, Vol PAS-88, No. 3, March 1969, pp 207-218.

145. Nozhevnikov, V. Y., "Grounding Electrotechnical Assemblies Under Permafrost Conditions," Mezhduvedomstvennoe Soveshehanie Po Merzlotovedeniyu 7th, Moscow, 1956, Materialy Po Inzhenernomu Merzlotovedeniyu Nauka, 1959, pp 172-176. Translated by US Joint Publications Research Service for US Army Cold Regions Research and Engineering Laboratory, Hanover NH, 1971, AD 722221.

146. Oakley, R.J., "Surface Transfer Impedance and Cable Shielding Design," Wire Journal, Vol 4, No. 3, March 1971, pp 44-47.

147. Ouyang, M., "Lightning Protection of Cable-Connected High-Voltage Distribution Substations by Surge Diverters," Proc IEE, Vol 117, No. 8, August 1970, pp 1693-1702.

148. Ouyang, M., "Measurement of the Resistance of an Earth Electrode System Covering a Large Area," Proc IEE, Vol 116, No. 11, November 1969, p 1984.

149. Paterson, H.A. and Hunter, E. M., "Lightning Arrestor Application and System Overvoltages," Electric Light and Power, Vol 19, November 1941, pp 60-64, 66.

150. Peabody, P. B., "Management Plan and Techniques for EMP Protection of Systems," Lockheed Missiles and Space Company Inc, PO Box 504, Sunnyvale CA 94088. Available as PEM-19, Lawrence Livermore Laboratory, Livermore CA 94550.

151. Peach, N., "Cable Shielding Innovations Promise Greater Reliability," Power, Vol 115, No. 9, September 1971, pp 94-95.

152. Pearlston, C. B., "Case and Cable Shielding, Bonding, and Grounding Considerations in Electromagnetic Interference," IRE Trans on Radio Frequency Interference, Vol RF1-4, No. 3, October 1960, pp 1-16.

153. Pfund, E.T., Jr, Russell, J. E., and Suverkrop, Capt Bard, "The Shielding Effectiveness of Concentric High Frequency Transmission Lines," Unclassified Proceedings of the Sixth Conference on Radio Interference Reduction and Electronic Compatibility, Armour Research Foundation of Illinois Institute of Technology (now IIITRI), Chicago IL, October 1960, pp 360-371.

154. Popp, E., "Lightning Protection of Line Repeaters," Record of IEEE International Conference on Communications, Vol 4, 1968, pp 169-174.

155. "Present-Day Grounding Practices on Power Systems," AIEE Trans, Vol 66, 1947, pp 1525-1551.

156. "Protection Instructions, EMP/RFI Protection Information, USAEDH Hardness program-EMP," HNDDSP-72-145-ED-R, Black and Veatch, Consulting Engineers, Kansas City MO, August 1973.

157. "Providing Protection Against an Electromagnetic Pulse (EMP)," Defense Civil Preparedness Agency, Washington DC 20301.

158. Radford, E. R., "Research Investigations of the Radio Frequency Shielding Effectiveness of Screening Materials," Proceedings of the Second Conference on Radio Interference Reduction, Armour Research Foundation of Illinois Institute of Technology (now IITRI), Chicago IL, March 1956, pp 297-307.

159. Radford, E. R., "RF Interference-Free Design Techniques in Radar Systems," Proceedings of the Third Conference on Radio Interference Reduction, Armour Research Foundation of Illinois Institute of Technology (now IITRI), Chicago IL, February 1957, pp 35-46.

160. "Recommended Grounding Practices for Single-Polarity D-C Structures," AIEE Committee Report, AIEE Trans, Vol 76, Pt III, October 1957, pp 784-790.

161. Reisener, William C., Jr, et al., "Radio Frequency Bonding," AFAL-TR-199, Contract AF 33(615)-1975, Franklin Institute Research Labs, Philadelphia PA, November 1965, AD 474924.

162. Ricker, E. A., "Automatic Grounding and Air-Break Switches for Protection of Transformer Stations," AIEE Trans, Vol 68, Pt II, 1949, pp 851-857.

163. Robb, J. D., "Coordination of Lightning and EMP Protection in Airborne Systems Design," PEM-29, Lightning and Transients Research Institute, 2531 West Summer Street, St. Paul MN 55113. Available from USAEC Technical Information Center, PO Box 62, Oak Ridge TN 37830.

164. Roberts, Capt. Palmer W., "Improper Welding Systems Cause Corrosion," BuShips Journal, Vol 7, August 1958, pp 7-8.

165. Roberts, Maj L.G.T., "Earthing of Low and Medium Voltage Distribution Systems In Regions of High Soil Resistivity," Royal Engineers Journal, Vol 67, March 1953, pp 16-35.

166. Ruoss, E, and Vorwerk, H.J., "Protecting Open Circuit-Breakers Against Lightning," Brown Boveri Rev., Vol 56, No. 9, September 1969, pp 424-433.

167. Ryabkoua, E. Ya and Annenkov, V. Z., "Study of Counterpoise in Poorly Conducting Soil," USSR EIectric Technology. Vol 2. Pergamon Press, London, 1971, pp 133-143.

168. Schaefer, L.P., "Corrosion Can Conquer Your Grounding System," Industry and Power, Vol 71, No. 1, June 1956, pp 20-23.

169. Schaefer, L.P., "Electrical Grounding Systems and Corrosion," AIEE Trans, Vol 74, Pt II, May 1955, pp 75-81.

170. Schaefer, R.M. and Knutz, W. H., "Charts Show Ground Rod Depth For Any Resistance In Advance," Electrical World, Vol 114, No. 16, October 1940, pp 63-65.

171. Schirmer, A.H., "Protective Grounding of Electrical Installations on Customer's Premises," AIEE Trans, Vol 60, Pt I, 1950, pp 657-659.

172. Schreiber, O.P., "Designing and Applying RFI Shields and Gaskets," Electronic Design, Vol 10, No. 20, September 1962, p 62.

173. Schreiber, O.P., "RFI Casketing," Electronic Design, Vol 8, No. 4, February 1960, pp 46-49.

174. Schreiber, O.P., "RF Tightness Using Resilient Metallic Gaskets," Proceedings of the Second Conference on Radio Interference Reduction, Armour Research Foundation of Illinois Institute of Technology (now IITRI), Chicago IL, March 1956, pp 343-359.

175. Schulz, Richard B., Huang, George C., and Williams, Walter L., "RF Shielding Design," IEEE Trans on Electromagnetic Compatibility, Vol EMC-10, No. 1, March 1968, pp 168-176.

176. Schwarz, E.W. and Wainwright, R. M., "Cathodic Protection Circuits," AIEE Trans, Vol 74, Pt II, November 1955, pp 311-315.

177. Schwarz, S.J., "Analytical Expressions for the Resistance of Grounding Systems," AIEE Trans, Vol 73, Pt IIIB, August 1954, pp 1011-1016.

178. Schwarz, S.J., "Let's Look to Station Grounding," Electrical World, Vol 143, No. 18, May 1955, pp 55-58.

179. "Service Experience With Lightning Arresters Under Contaminated Conditions," IEEE Trans on Power Apparatus and Systems, Vol PAS-90, No. 1, January/February 1971, pp 369-382.

180. "Shielding High-Frequency Circuits Can Be Effectively Engineered," Electrical Manufacturing, Vol 38, No 3, September 1946, pp 134-137.

181. Smith, B.H., "The Right Way to Ground Generator Neutrals," Power, Vol 99, No. 11, November 1955, pp 124-125.

182. Smith, M.N., "Practical Application and Effectiveness of Commercially Available Pulse Voltage Transient Suppressors," Technical Note N-1312, Contract YF53.534.005.01.001, Naval Civil Engineering Laboratory, December 1973, AD 773074.

183. Spring, W.S., "Magnetic Shielding," Electrical Manufacturing, Vol 61, No, 2, February 1958, pp 138-139, 158.

184. Sodaro, J.F., "Shielding, Nomography," Electronics, Vol 27, No. 5, May 1954, p 190.

185. Sokolov, V. K., et al., "Protection of Communication Cables in Plastic Sheaths from Lightning Strikes," FTD-MT-24-0041-72, Foreign Technology Division, Air Force Systems Command, 1969, AD 750642.

186. Stevens, D.J., "Overall Design Practices, Testing Philosophy and Management Plan in the EMP Hardening Approach for the B-1 Aircraft," PEM-26, Los Angeles Aircraft Division, Rockwell International. Copies available from USAEC Technical Information Center, PO Box 62, Oak Ridge TN 37830.

187. Stratton, L.J., "Grounding Grids for High-Voltage Stations," AIEE Trans, Vol 72, Pt III, August 1953, pp 799-809.

188. Strong, W.F., "Neutral Grounding Methods for Industrial Power Systems," Industry and Power, Vol 58, No. 2, February 1950, pp 90-92.

189. "Study and Evaluation of Radio Frequency Grounding Systems," Contract NBY-17828, Interference Testing and Research Laboratory Inc, Boston MA, 1960, AD 620 826.

190. Tagg, C.F., "Measurement of the Resistance of Physically Large Earth Electrode Systems," Proc IEE, Vol 117, No. 11, November 1970, pp 2185-2190.

191. Taussign, Helen B., "Death From Lightning and the Possibility of Living Again," American Scientist, Vol 57, No. 3, Autumn 1969, pp 306-316.

192. Thacker, H.B., "Grounded Versus Ungrounded Low-Voltage A-C Systems," Iron and Steel Engineering, Vol 31, No. 4, April 1954, pp 65-72.

193. Thomson, A.G., "Earthing Electrical Installations," The Chemical Age, Vol 71, No. 1847, December 1954, pp 1198-1200.

194. "Total Shields Solve System Problems," Electronic Design News, May 1963, p 90.

195. Towne, H.M., "Impulse Characteristics of Driven Grounds," General Electric Review, Vol 31, No. 11, November 1968, pp 605-609.

196. Ufer, H. G., “Investigation and Testing of Footing-Type Grounding Electrodes for Electrical Installations,” IEEE Trans on Power Apparatus and Systems, Vol 83, No. 10, October 1964, pp 1042-1048.

197. ’’Unique Variable Resistor Bypasses High-Voltage Spikes,” Product Engineering, Vol 43, No. 2, February 1972, p 40.

198. Varone, R. A., “One-Point Ground System with R-F Shielding and Filtering,” Electrical Engineering, Vol 79, No. 12, December 1960, pp 1023-1033.

199. Verhiel, Adrian L., "Review of Bonding Practices of Ship-to-Shore Facilities Handling Petroleum Products,” IEEE Trans on Industry and General Applications, Vol IGA-5, No. 5, September/October 1969, pp 624-632.

200. Wagner, C. F., McCann, G. D., and Lear, C. M., “Shielding of Substations,” AIEE Trans, Vol 61, February 1942, pp 96-99.

201. Walter, B., “On Lightning Protection With a Remote Lightning Rod," NASA TT F-14, 065, National Aeronautics and Space Administration, Washington DC, December 1971, N72-12383.

202. Warner, G.L. and Doskocil, A. C., “EMP Hardening Approach for SAM- D,” PEM-35, Raytheon Company, Missile Systems Division. Copies available from USAEC Technical Information Center, PO Box 62, Oak Ridge TN 37830.

203. Weinbaum, B., “ICBM Checkout Equipment Errors Due to Interference,” Unclassified Proceedings of the Sixth Conference on Radio Interference Reduction and Electronic Compatibility, Armour Research Foundation of Illinois Institute of Technology (now IITRI), Chicago IL, October 1960, pp 237-255.

204. Weiss, Gerald, “Wiring Design to Avoid Pickup,” Product Engineering, Vol 26, No. 11, Product Design Handbook Issue, October 1955, pp 16-19.

205. Weiner, Paul, “A Comparison of Concrete Encased Grounding Electrodes to Driven Ground Rods,” IEEE Trans on Industry and General Applications, Vol lGA-6, No. 3, May-June 1970, pp 282-287.

206. Wilson, Paul B., Jr, “Practical Approach to Interference Prediction and Suppression,” Electronics, Vol 33, No. 37, September 1960, pp 84-87.

207. Wilson, T. R., “Electric Bonding Requirements for Avoidance of Fuel-Air Explosions,” Supplement to IEEE Trans Aerospace and Electronic Systems, Vol AES-3, No. 6, November 1967, pp 590-598.

208. Wilson, T. R., Turner, J. R., and Skene, E. M., “Low Resistance Electric Bonds,” Supplement to IEEE Trans Aerospace and Electronic Systems, Vol AES-3, No. 6, November 1967, pp 599-606.

209. Wood, A. B., “Lightning and the Transmission Engineer,” Electronics and Power, Vol 15, June 1969, pp 195-200.

210. Wynne, J.G., "The Purpose and Design of a Substation Ground Network," Pulp and Paper Magazine of Canada, Vol 57, No. 3, Convention Issue, 1956, pp 292-298.

211. Yamaguchi, T., "The Shielding Effect of a Pipe Cable," Electrical Engineering in Japan, Vol 88, No. 5, May 1968, pp 25-34.

212. Zaborszky, J., "Efficiency of Grounding Grids with Non-uniform Soil," AIEE Trans, Vol 74, Pt III, December 1955, pp 1230-1233.

213. Zaborszky, J. and Rittenhouse, J. W., "Design Charts for Determining Optimum Ground Rod Dimensions," AIEE Trans, Vol 72, Pt III, August 1953, pp 810-817.

214. Zastrow, O.W., "Direct Currents and Corrosion as Related to AC Electric System Grounding," Direct Current, Vol 2, No. 7, December 1955, pp 183-186.

APPENDIX C

TABLE OF CONTENTS FOR VOLUME I

CHAPTER 1 - FACILITY GROUND SYSTEM

Paragraph		Page
1.1	GENERAL	1-1
1.2	APPLICATION	1-1
1.3	DEFINITIONS	1-1
1.4	REFERENCE D DOCUMENTS	1-1
1.5	DESCRIPTION	1-2
1.5.1	Facility Ground System	1-2
1.5.2	Grounding and Power Distribution Systems	1-3
1.5.3	Electrical Noise in Communications Systems	1-4
1.6	BONDING, SHIELDING, AND GROUNDING RELATIONSHIP	1-5
1.7	GROUNDING SAFETY PRACTICES	1-5

CHAPTER 2- EARTHING AND EARTH ELECTRODE SUBSYSTEM

2.1	OBJECTIVES	2-1
2.1.1	Lightning Discharge	2-1
2.1.2	Fault Protection	2-2
2.1.3	Noise Reduction	2-2
2.1.4	Summary of Requirements	2-2
2.2	RESISTANCE REQUIREMENTS.	2-5
2.2.1	General	2-5
2.2.2	Resistance to Earth	2-5
2.2.2.1	National Electrical Code Requirements	2-5
2.2.2.2	Department of Defense Communications Electronics Requirements	2-5
2.2.3	Lightning Requirements	2-5
2.3	SOIL RESISTIVITY	2-7
2.3.1	General	2-7
2.3.2	Typical Resistivity Ranges..	2-7
2.3.3	Environmental Effects o..	2-7
2.4	MEASUREMENT OF SOIL RESISTIVITY	2-8
2.4.1	General	2-8
2.4.2	Measurement Techniques	2-8
2.4.2.1	One-Electrode Method	2-8
2.4.2.2	Four-Terminal Method	2-13
2.5	TYPES OF EARTH ELECTRODE SUBSYSTEMS	2-15
2.5.1	General	2-15
2.5.2	Ground Rods	2-15
2.5.3	Buried Horizontal Conductors	2-15

TABLE OF CONTENTS (Continued)

Paragraph		Page
2.5.4	Grids	2-15
2.5.5	Plates.	2-15
2.5.6	Metal Frameworks of Buildings	2-16
2.5.7	Water Pipes	2-16
2.5.8	Incidental Metals.	2-16
2.5.9	Well Casings.	2-16
2.6	RESISTANCE PROPERTIES	2-17
2.6.1	Simple Isolated Electrodes	2-17
2.6.1.1	Driven Rod.	2-17
2.6.1.2	Other Commonly Used Electrodes	2-23
2.6.2	Resistance of Multiple Electrodes	2-23
2.6.2.1	Two Vertical Rods in Parallel.	2-23
2.6.2.2	Square Array of Vertical Rods	2-27
2.6.2.3	Horizontal Grid (Mesh)	2-29
2.6.2.4	Vertical Rods Connected by a Grid	2-30
2.6.3	Transient Impedance of Electrodes	2-32
2.6.4	Effects of Nonhomogeneous (Layered) Earth	2-32
2.6.4.1	Hemispherical Electrode	2-32
2.6.4.2	Vertical Rod	2-33
2.6.4.3	Grids	2-33
2.7	MEASUREMENT OF RESISTANCE-TO-EARTH OF ELECTRODES	2-35
2.7.1	Introduction	2-35
2.7.2	Fall-of -Potential Method	2-35
2.7.2.1	Probe Spacing	2-36
2.7.2.2	Extensive Electrode Subsystems.	2-42
2.7.2.3	Test Equipments	2-45
2.7.3	Three-Point (Triangulation) Method	2-46
2.8	OTHER CONSIDERATIONS	2-47
2.8.1	Surface Voltages Above Earth Electrodes	2-47
2.8.1.1	Step Voltage Safety Limit..	2-47
2.8.1.2	Step Voltages for Practical Electrodes	2-49
2.8.1.2.1	Flush Vertical Rod	2-49
2.8.1.2.2	Buried Vertical Rod	2-53
2.8.1.2.3	Buried Horizontal Grid.	2-55
2.8.1.3	Minimizing Step Voltage	2-56
2.8.2	Heating of Electrodes	2-57
2.8.2.1	Steady State Current	2-57
2.8.2.2	Transient Current	2-57
2.8.2.3	Minimum Electrode Size	2-59

TABLE OF CONTENTS (Continued)

Paragraph		Page
2.9	ELECTRODE ENHANCEMENT	2-59
2.9.1	Introduction	2-59
2.9.2	Water Retention	2-60
2.9.3	Chemical Salting	2-60
2.9.4	Electrode Encasement	2-62
2.9.5	Salting Methods.	2-63
2.10	CATHODIC PROTECTION	2-63
2.10.1	Introduction	2-63
2.10.2	Protection Techniques	2-65
2.10.3	Sacrifical Anodes	2-65
2.10.4	Corrosive Atmospheres	2-66
2.11	GROUNDING IN ARCTIC REGIONS	2-66
2.11.1	Soil Resistivity	2-66
2.11.2	Improving Electrical Grounding in Frozen Soils	2-70
2.11.2.1	Electrode Resistance	2-71
2.11.2.2	Installation and Measurement Methods	2-71
2.11.2.2.1	Electrode Installation	2-71
2.11.2.2.2	Backfill	2-71
2.12	REFERENCES	2-75

CHAPTER 3 - LIGHTNING PROTECTION SUBSYSTEM

3.1	THE PHENOMENON OF LIGHTNING	3-1
3.2	DEVELOPMENT OF A LIGHTNING FLASH	3-3
3.3	INFLUENCE OF STRUCTURE HEIGHT	3-3
3.4	STRIKE LIKELIHOOD	3-4
3.5	ATTRACTIVE AREA	3-1o
3.5.1	Structures Less Than 100 Meters High	3-1o
3.5.2	Cone of Protection	3-11
3.6	LIGHTNING EFFECTS	3-13
3.6.1	Flash Parameters	3-13
3.6.2	Mechanical and Thermal Effects	3-15
3.6.3	Electrical Effects	3-17
3.6.3.1	Conductor Impedance Effects	3-17
3.6.3.2	Induced Voltage Effects	3-18
3.6.3.3	Capacitively-Coupled Voltage	3-21
3.6.3.4	Earth resistance	3-21
3.7	BASIC PROTECTION REQUIREMENTS	3-25
3.8	DETERMINING THE NEED FOR PROTECTION	3-26
3.8.1	Strike Likelihood	3-26

TABLE OF CONTENTS (Continued)

Paragraph		Page
3.8.2	Type of Construction	3-26
3.8.3	Criticalness to System Mission	3-27
3.9	APPLICABLE CODES	3-27
3.10	REFERENCES	3-28

CHAPTER 4 - FAULT PROTECTION SUBSYSTEM

4.1	F.AULT PROTECTION	4-1
4.1.1	Power System Faults	4-1
4.1.2	Ground-Fault-Circuit-Interrupter (GFCI)	4-3
4.2	EARTH CONNECTION	4-3
4.3	AC POWER LINE GROUND	4-3
4.4	TEST EQUIPMENT	4-5
4.5	REFERENCES	4-6

CHAPTER 5 - GROUNDING OF SIGNAL REFERENCE SUBSYSTEM

5.1	INTRODUCTION	5-1
5.2	CONDUCTOR CONSIDER~lTIONS.	5-1
5.2.1	Direct Current Resistance	5-1
5.2.2	Alternating Current Impedance	5-1
5.2.2.1	Skin Effect	5-3
5.2.2.2	AC Resistance	5-5
5.2.2.3	Reactance	5-7
5.2.2.4	Proximity Effect	5-10
5.2.3	Resistance Properties vs Impedance Properties	5-10
5.2.4	Effects of Geometry	5-12
5.2.4.1	Stranded Cables	5-13
5.2.4.2	Rectangular Conductors	5-13
5.2.4.3	Tubular Conductors	5-13
5.2.4.4	Structural Steel Members ,	5-15
5.3	SIGNAL REFERENCE SUBSYSTEM NETWORK CONFIGURATIONS	5-15
5.3.1	Floating Ground	5-15
5.3.2	Single-Point Ground (for Lower Frequencies)	5-19
5.3.3	Multipoint Ground (for Higher Frequencies)	5-24
5.3.3.1	Equipotential Plane.	5-26
5.3.3.2	Types of Equipotential Planes.	5-27
5.3.4	Floating System	5-28

TABLE OF CONTENTS (Continued)

Paragraph		Page
5.4	SITE APPLICATIONS	5-28
5.4.1	Lower Frequency Network..	5-29
5.4.2	Higher Frequency Network..	5-30
3.4.3	Frequency Limits	5-31
5.5	REFERENCES	5-32

CHAPTER 6 - INTERFERENCE COUPLING AND REDUCTION

6.1	INTRODUCTION	6-1
6.2	COUPLING MECHANISMS	6-5
6.2.1	Conductive Coupling	6-5
6.2.2	Free-Space Coupling	6-6
6.2.2.1	Near-Field Coupling	6-6
6.2.2.2	Inductive Coupling	6-8
6.2.2.3	Capacitive Coupling	6-11
6.2.2.4	Far-Field Coupling	6-14
6.3	COMMON-MODE NOISE	6-17
6.3.1	Basic Theory of Common-Mode Coupling	6-19
6.3.2	Differential Amplifier	6-23
6.4	MINIMIZATION TECHNIQUES	6-23
6.4.1	Reduction of Coupling	6-23
6.4.1.1	Reference Plane Impedance Minimization	6-23
6.4.1.2	Spatial Separation	6-24
6.4.1.3	Reduction of Circuit Loop Area	6-24
6.4.1.4	Shielding	6-24
6.4.1.5	Balanced Lines	6-24
6.4.2	Alternate Methods	6-24
6.5	FACILITY AND EQUIPMENT REQUIREMENTS	6-25
6.6	REFERENCES	6-25

CHAPTER 7 - BONDING

7.1	DEFINITION OF BONDING	7-1
7.2	PURPOSES OF BONDING	7-1
7.3	RESISTANCE CRITERIA	7-3
7.4	DIRECT BONDS	7-4
7.4.1	Contact Resistance	7-6
7.4.1.1	Surface Contaminants	7-7
7.4.1.2	Surface Hardness	7-7
7.4.1.3	Contact Pressure	7-7

TABLE OF CONTENTS (Continued)

Paragraph		Page
7.4.1.4	Bond Area.	7-8
7.4.2	Direct Bonding Techniques	7-1o
7.4.2.1	Welding	7-1o
7.4.2.2	Brazing	7-11
7.4.2.3	Soft Solder	7-14
7.4.2.4	Bolts	7-14
7.4.2.5	Rivets	7-15
7.4.2.6	Conductive Adhesive	7-16
7.4.2.7	Comparison of Techniques	7-16
7.5	INDIRECT BONDS	7-16
7.5.1	Resistance	7-19
7.5.2	Frequency Effects	7-19
7.5.2.1	Skin Effect.	7-19
7.5.2.2	Bond Reactance	7-19
7.5.2.3	Stray Capacitance	7-23
7.6	SURFACE PREPARATION	7-25
7.6.1	Solid Materials	7-26
7.6.2	Organic Compounds	7-26
7.6.3	Platings and Inorganic Finishes	7-29
7.6.4	Corrosion By-Products	7-29
7.7	COMPLETION OF THE BOND	7-29
7.8	BOND CORROSION	7-30
7.8.1	Chemical Basis of Corrosion	7-30
7.8.1.1	Electrochemical Series	7-31
7.8.1.2	Galvanic Series	7-31
7.8.2	Relative Area of Anodic Member	7-34
7.8.3	Protective Coatings	7-34
7.9	WORKMANSHIP	7-34
7.10	SUMMARY OF GUIDELINES	7-36
7.11	REFERENCES	7-37

CHAPTER 8 - SHIELDING

8.1	FUNCTION OF AN ELECTROMAGNETIC SHIELD.	8-1
8.2	BASIC SHIELDING THEORY	8-2
8.2.1	Oppositely Induced Fields...	8-2
8.2.2	Transmission Line Analogy	8-2
8.2.3	Nonuniform Shielding..	8-4

TABLE OF CONTENTS (Continued)

Paragraph		Page
8.3	SHIELDING EFFECTIVENESS OF CONTINUOUS SINGLE-THICKNESS SHIELDS	8-4
8.3.1	Absorption Loss	8-5
8.3.2	Reflection Loss	8-6
8.3.2.1	Low Impedance Field	8-10
8.3.2.2	Plane Wave Field	8-13
8.3.2.3	High Impedance Field....	8-15
8.3.3	Re-Reflection Correction Factor	8-19
8.3.4	Total Shielding Effectiveness	8-19
8.3.4.1	Measured Data	8-27
8.3.4.2	Summary	8-27
8.4	SHIELDING EFFECTIVENESS OF OTHER SHIELDS	8-31
8.4.1	Multiple Solid Shields	8-31
8.4.2	Coatings and Thin-Film Shields	8-32
8.4.3	Screens and Perforated Metal Shields	8-33
8.5	SHIELD DISCONTINUITY EFFECTS (APERTURES)	8-41
8.5.1	Seams Without Gaskets..	8-42
8.5.2	Seams With Gaskets	8-45
6.5.3	Penetration Holes	8-45
8.5.3.1	Waveguide-Below-Cutoff	8-50
8.5.3.2	Screen and Conducting Glass	8-52
8.6	SELECTION OF SHIELDING MATERIALS	8-53
8.7	USE OF CONVENTIONAL BUILDING MATERIALS	8-56
8.7.1	Concrete	8-56
8.7.2	Reinforcing Steel (Rebar)	8-56
8.8	CABLE AND CONNECTOR SHIELDING	8-59
8.8.1	Cable Shields	8-59
8.8.2	Terminations and Connectors	8-63
8.9	SHIELDED ENCLOSURES (SCREEN ROOMS)	8-63
8.9.1	Demountable (Modular) Enclosures	8-66
8.9.2	Custom Built Rooms	8-70
8.9.3	Foil Room Liners	8-71
8.10	TESTING OF SHIELDS	8-72
8.10.1	Low Impedance Magnetic Field Testing Using Small Loops	8-73
8.10.2	Additional Test Methods	8-74
8.11	PERSONNEL PROTECTION SHIELDS	8-74
8.12	DETERMINATION OF SHIELDING REQUIREMENTS	8-74
8.12.1	Equipment Disturbances	8-76
8.12.2	Electromagnetic Environmental Survey	8-76
8.12.3	Equipment EMI Properties	8-77

TABLE OF CONTENTS (Continued)

Paragraph		Page
8.13	SYSTEM DESIGN CONSIDERATIONS	8-77
8.13.1	Size.	8-78
8.13.2	Layout	8-78
8.13.3	Signal Properties	8-78
8.13.4	cost	8-78
8.14	REFERENCES	8-79

CHAPTER 9- PERSONNEL PROTECTION

9.1	ELECTRIC SHOCK	9-1
9.1.l	Levels of Electric Shock	9-1
9.1.2	Shock Prevention	9-3
9.2	STATIC ELECTRICITY	9-3
9.3	RADIO FREQUENCY (RF) RADIATION HAZARDS	9-5
9.4	LASER HAZARDS	9-5
9.5	X-RAY RADIATION	9-6
9.6	REFERENCES	9-6

CHAPTER 10- NUCLEAR EMP EFFECTS

10.1	INTRODUCTION	1o-1
10.2	EMP GENERATION	1o-1
10.2.1	High-Altitude EMP (HEMP)	10-1
10.2.1.1	Early-Time HEMP	1o-1
10.2.1.2	Late-Time HEMP (MHDEMP)	10-3
10.2.1.3	Intermediate-Time HE NIP	10-3
10.2.2	Surface-Burst EMP	10-3
10.2.3	Other EMP Phenomena	10-4
10.2.4	Comparison With Lightning	10-5
10.3	HEMP INTERACTION WITH SYSTEM	10-5
10.3.1	Current in Long Lines	10-6
10.3.1.1	Long Overhead Lines	10-6
l0.3.1.2	Long Buried Lines	10-7
l0.3.1.3	Vertical Structures	10-9
10.3.2	HEMP Interaction With Local Structure	10-9
10.3.2.1	Shields	10-9
10.3.2.2	Penetrating Conductors	10-10
10.3.2.3	Apertures	10-11

TABLE OF CONTENTS (Continued)

Paragraph		Page
10.4	PROTECTION AGAINST HEMP	10-13
10.4.1	HEMP Barrier	10-13
10.4.1.1	Shield	10-13
10.4.1.2	Penetrating Conductors	10-13
10.4.1.3	Apertures	10-15
10.4.2	Allocation of Protection	10-15
10.4.2.1	Amount of Protection Needed	10-15
10.4.2.2	Where Protectionism Applied	10-17
10.4.2.3	Terminal Protection Devices	10-17
10.4.2.3.1	Spark Gaps and Gas Tubes	10-17
10.4.2.3.2	Metal-Oxide Varistors	10-18
10.4.2.3.3	Semiconductors	10-18
10.4.2.3.4	Filters	10-18
10.4.2.4	Waveguide Penetration of Facility Shield	10-19
10.4.2.4.1	Introduction	10-19
10.4.2.4.2	In-Line Waveguide Attachment	10-21
10.4.2 .4.2.1	Sleeve and Bellows Attachment	10-21
10.4.2 .4.2.2	Braided Wire Sleeve	10-23
10.4.2 .4.2.3	Stuffing Tube for Waveguide	10-24
10.5	REFERENCES	10-25

CHAPTER 11- NOTES

11.1	SUBJECT TERM (KEY WORD) LISTING	11-1

APPENDIX D

NOTE: This appendix is a subjective index of material contained in both volumes of MIL-HDBK-419A. The Roman numeral preceding the page number identifies the volume of interest.

INDEX A

Absorption loss, shield, I: 8-5, 8-8, 8-9, 8-27; II: 1-160, 1-162
- equations for, I: 8-6
- nomograph for, II: 1-161

AC resistance, I: 5-5

Air terminals, I: 3-13; II: 1-24, 1-27 to 1-33, 1-41, 1-179
- height, II: 1-27, 1-28
- location, II: 1-24 to 1-33
- materials, II: 1-24
- also see cone of protection

Amplifiers, grounding of, I: 6-19; II: 3-35 to 3-40

Analog devices, grounding of, II: 3-35

Antenna effects, I:3-18, 6-14, 6-15
- of groundwires, I: 6-16
- and EMP pickup, I: 10-9
- and lightning induced surges, I: 3-17

Apertures, shield, I:8-32, 8-41, 10-11, 10-12, 10-15; II: 3-28
- equations for, I: 8-34
- control of leakage through, I: 8-42; II: 3-28

Arctic grounding, I: 2-66
- electrode resistance, I: 2-71
- improve grounding, I: 2-70
- installation and measurements, I: 2-71
- soil resistivity, I: 2-66

Armored cable, I: 8-60; II: 1-103, 1-171, 1-173
- grounding of, II: 1-103
- relative shielding effectiveness of, I: 8-60; II: 1-171

Arrester, surge, I: 3-25, 10-17 to 10-19; II: 1-59 to 1-70

Attractive area, I: 3-10
- definition of, I: 3-10
- how to determine, I: 3-11
- also see effective height and cone of protection

APPENDIX D (Continued)

INDEX B

Balancing, use of, I: 6-23; II: 3-4, 3-7
amplifiers, I: 6-21
signal lines, I: 6-24; II: 3-4, 3-7
also see noise minimization

Body resistance, human, I: 9-1

Bolting, I: 7-14; II: 1-140, 2-10
also see bond, electrical

Bond (and bonding), electrical, I: 7-1 to 7-36; II: 1-78, 1-109, 1-140, 1-195,1-199, 3-18
area, I: 7-8
assembly, I: 7-10 to 7-17
completion of, I: 7-29; II: 1-140
connectors of, II: 1-140, 3-20, 3-27
contaminants, I: 7-7
definition, I: 7-1
direct, I: 7-4
earth electrode system, in, II: 1-22, 2-5
equipment, II: 3-18
guidelines for, I: 7-36; II: 1-140, 3-18
Indirect, I: 7-16
also see bond strap
inspection of, II: 1-195, 2-5, 2-13, 3-49
lightning protection system, in, II: 1-79, 2-13
protection of, I: 7-29; II: 1-143 to 1-146
purposes of, I: 7-1
resistance, I: 7-3, 7-6; II: 1-194, 1-195, 2-10, 2-17, 2-19
shields in, I: 8-33, 8-41; II: 1-162, 3-25
structured, II: 1-140, 2-10
techniques, I: 7-10; II: 1-140
comparison of, I: 7-16
testing of, II: 2-19
torque, I: 7-7; II: 1-141
table of, II: 1-141
washer, use of, I: 7-15
workmanship, I: 7-34

APPENDIX D (Continued)

INDEX B

Bond Protection Code, II 1-143 to 1-147

Bond strap (or jumper), I: 7-21; II: 1-147 to l-153, 2-10,3-18
frequency, effects of, I: 7-19
guidelines for use of, II: l-148 to l-153,2-10, 3-18
ℓ/b ratio, recommended, I: 7-21

Braided straps, I: 7-21

Brazing, I: 7-ll; II: 1-140, 1-142

British Standard Code of Practice, I: 3-13

Buried metals, see incidental electrodes

Bus bar, use of, II: 3-3

APPENDIX D (Continued)

INDEX C

Cabinets, grounding of, II: 1-131, 3-16

Cable routing, II: 1-171
interference control, for, II: 1-171

Cable shields, I: 8-59 to 8-63; II: 1-104, 3-2, 3-4, 3-35, 3-38, 3-49
bonding of, II: 3-8
braid, I: 8-59
conduit as, I: 8-60
grounding of, I: 8-61; II: 1-104, 3-2, 3-35, 3-38, 3-49
installation practices, I: 8-61

Cable trays, II: 1-103, 1-148

Calcium chloride, I: 2-60
also see chemical enhancement

Capacitance coupling, I: 3-21, 6-11

Capacitance, stray, I: 7-23

Cathodic protection, I: 2-63

Chemical enhancement, I: 2-60; II: 1-14, 1-185

Classified Information Processors (RED/BLACK Equipments), II: 1-134, 2-58

Climate, effects of, I: 2-7; II: 1-5, 1-143, 1-144
on bonds, II: 1-143, 1-144
on earth electrode subsystem design, II: 1-5
on soil resistivity, I: 2-5

Common-mode noise, I: 6-17 to 6-23

Common-mode rejection ratio, I: 6-21

Component damage, I: 10-15 to 10-17

APPENDIX D (Continued)

INDEX C

Compton electrons, I: 10-1 to 10-3

Concrete enclosed electrodes, I: 2-62

Conductive coupling, I: 6-5, 6-19

Conductor length criteria, ground, II: 1-57

Conductor parameters, I: 3-17, 5-1
- ac resistance, I: 5-5
- dc resistance, I: 5-1
- proximity effects, I:5-10
- reactance, I: 5-7
- also see inductance and skin effect

Conductor routing, see cable routing

Conductor selection, grounding, I: 5-1 to 5-19; II: 1-107
- I-beams, I: 5-15
- rectangular bars, I: 5-13
- stranded cables, I: 5-13
- tubular (pipes), I: 5-13

Conduit, I: 8-60; II: 1-56, 1-74, 1-75, 1-103, 1-149, 1-159
- as a shield, I: 8-60; II: 1-159
- grounding of, II: 1-56, 1-75, 1-103

Cone of protection, I: 3-11; II: 1-27 to 1-33
- definition of, I: 3-13
- example of, I: 3-13; II: 1-28
- means of determining, II: 1-28, 1-30 to 1-33

Connectors, I: 8-59; II: 1-173, 3-13, 3-20, 3-49
- bonding of, II: 1-173, 3-13, 3-20, 3-49
- shields, I: 8-59

Contaminants, bond, I: 7-7; II: 1-142
- removal of, I: 7-25; II: 1-142

APPENDIX D (Continued)

INDEX C

Convenience outlets, II: 1-104, 3-14, 3-49
grounding of, II: 1-104, 3-14
inspection of, II: 3-49

Copper sulfate, I: 2-60
also see chemical enhancement

Corrosion, I: 7-29 to 7-35; II: 1-98, 1-99, 1-145, 1-146
in bonds, I: 7-30
protection against, I: 7-34; II: 1-98, 1-99, 1-145, 1-146
theory, I: 7-30
also see dissimilar metals

Counterpoise, II: 1-15, 1-19

Coupling, I: 6-1
capacitive, I: 6-11
conductive, I: 6-5
far-field, I: 6-14 to 6-17
free-space, I: 6-6
inductive, I: 6-8
near-field, I: 6-6
radiated, I: 6-14

INDEX D

Demountable enclosures, I: 8-66

Digital data systems, grounding of, II: 3-40

Discrepancy report, major, II: 2-38

Dissimilar metals, I: 7-31; II: 1-143, 1-145, 1-146

Down conductor, lightning, I: 3-17; II: 1-34, 1-37 to 1-39
- location, II: 1-37, 1-39
- routing, I: 3-17; II: 1-37, 1-39
- size, II: 1-34

Drawings, requirements for, II: 2-4, 3-43

APPENDIX D (Continued)

INDEX E

Earth electrode, I: 1-2, 2-1, 2-15; II: 1-2 to 1-22, 1-193, 1-196, 2-5, 2-39, 2-40
current handling capacity, I: 2-57; II: 1-6
design, II: 1-2, 1-6 to 1-14
effective size of, I: 2-58
encasement, I: 2-62
enhancement, I: 2-59
functions of, I: 2-1; II: 1-6
heating, I: 2-57
impulse impedance, I: 2-32; II: 1-6
inspection of, II: 1-193, 2-5
installation practices, II: 1-22, 1-193
measurement, I: 2-35
resistance, I: 2-17; II: 1-9, 1-193
subsystem, I: 1-2; II: 1-193, 1-196
types of, I: 2-15

Earth resistance testing, I: 2-23, 2-35, 2-46; II: 1-9, 1-193, 2-5
fall-of-potential method, I: 2-35
large electrode system for, I: 2-44
three-point method of, I:2-46

Effective height, I: 3-11
also see cone of protection

Electric dipole, I: 6-15

Electric shock, I: 9-1

Electrical equipment, grounding of, II: 1-104, 1-133

Electrical noise in communication systems, I: 1-4

Electrical noise reduction, I: 1-2

Electrical supporting structures, grounding of, II: 102 to 104

Electrochemical series, I: 7-31

APPENDIX D (Continued)

INDEX E

Electromagnetic interference (EMI), I: 1-4, 8-74, 8-77; II: 1-113

Electromagnetic survey, I: 8-76; II: 1-154, 2-17

EMP (Electromagnetic Pulse), I: 10-1 to 10-25; II: 1-172 to 1-177, 1-187, 1-190, 3-50
- comparison with lightning, I: 10-5
- current in long lines, I: 10-6 to 10-9
- description, I: 10-1 to 10-5
- equipment susceptibility to, I: 10-22
- high-altitude EMP (HEMP), I: 10-5 to 10-25
- protection, I: 10-13 to 10-25; II: 1-172 to 1-177, 1-187, 1-190, 3-50

Enclosures, electrical, II: 1-103, 3-27 to 3-33

Enclosures, shielded, I: 8-63

Epoxy, conductive, I: 7-16

Equipment grounding, II: 3-1 to 3-19
- cabinet, of, II: 3-16, 3-46
- fault protection, for, II: 3-14
- inspection of, II: 3-43
- signal network, II: 3-2

Equipment protection, I: 1-2

Equipment susceptibility, I: 10-15; II: 1-50

Equipotential plane, I: 5-26, 5-27; II: 1-120 to 1-133

Existing facilities, II: 2-1 to 2-54
- expansion or modification of, II: 2-35
- survey of, II: 2-4 to 2-32
- upgrading, guidelines for, II: 2-33

APPENDIX D (Continued)

INDEX F

Facility ground system, II: 1-113, 1-118 to 1-123, 1-199
combined elements, II: 1-121
description of, II: 1-113
structural steel as used in, II: 1-118, 1-120

Facility maintenance report, II: 2-46

Facility survey, II: 2-4, 2-24

Fall-of-potential method, I: 2-35 to 2-46; II: 1-182, 2-6
theory of, I: 2-35

Far-field coupling, I: 6-14 to 6-17

Fasteners, II: 1-39, 1-40, 1-147

Fault protection, I: 1-3, 2-2, 4-1

Faults, electrical, I: 2-2, 4-1; II: 1-6, 3-14
cause of, I: 4-1
projective measures against, I: 4-1; II: 1-6, 3-14

Feeder ground plate, II: 3-47

Field, high impedance, I: 8-15
low impedance, I: 8-10
plane wave, I: 8-13

Filters, I: 6-25, 10-18; II: 3-26

Forms, II: 1-195 to 1-200, 2-24 to 2-32, 2-38, 2-46 to 2-53, 3-50 to 3-54
equipment inspection, II: 3-50 to 3-54
facility checkout, II: 1-195 to 1-200
facility maintenance report, II: 2-46 to 2-53
facility survey, II: 2-24 to 2-32
major discrepancy report, II: 2-38

Four-probe method, I: 2-15; II: 1-2 to 1-5
also see resistivity, soil

Frost line, II: 1-6

APPENDIX D (Continued)

INDEX G

Galvanic series, I: 7-31

Gaskets, RF, I: 8-45; II: 1-162, 3-20, 3-22, 3-27, 3-49

Geological factors, II: 1-5

Glass, conductive, I: 8-52; II: 1-164

Ground fault interrupter (GFI), I: 4-2

Ground, floating, I: 5-15

Ground grid (or mesh), I: 2-15, 2-27, 2-33, 2-55, 5-27; II: 1-8

Ground, multipoint, I: 5-24 to 5-28; II: 1-120

Ground network configuration, I: 5-18

Ground network isolation, I: 5-28; II: 3-4

Ground rods, I: 2-15, 2-23, 2-27, 2-33, 2-48; II: 1-8 to 1-22, 1-178
- arrays of, I: 2-27; II: 1-12
- parallel, I: 2-23; II: 1-12
- placement of, II: 1-14 to 1-19
- resistance, equations for, I: 2-17; II: 1-9, 1-178
- resistance, nomograph of, II: 1-11
- selection of, II: 1-9 to 1-15
- sizes of, I: 2-15
- spacing of, I: 2-15
- step voltage of, I: 2-48

Ground, single-point, I: 5-19 to 5-24; II: 3-43

Ground system, I: 1-2

Grounding, electrical power system, I: 1-3; II: 1-179, 2-16
- single-phase, I: 4-4; II: 1-179
- three-phase, I: 4-4; II: 1-178

INDEX G

Grounding safety, I: 1-5

Grounding, signal, I: 5-1 to 5-32; II: 1-113 to 1-133, 1-185 to 1-188, 2-17, 2-31, 3-1, 3-43
- equipment in, II: 3-1
- facilities, in, II: 1-113
- network configurations, I: 5-18 to 5-31; II: 1-113, 1-186, 1-187, 2-17, 2-31
- purposes of, I: 5-1

Guards (down conductor), II: 1-41, 2-13

Guidelines for
- bonding, I: 7-36; II: 1-148 to 1-151, 1-173, 1-188, 1-195
- earth electrode subsystem design, I: 1-14 to 1-22
- earth electrode subsystem installation, II: 1-22
- EMP protection, I: 10-13 to 10-25; II: 1-173, 1-188, 3-42
- equipment inspections, II: 3-43
- facility inspections, II: 1-195
- facility upgrading, II: 2-1, 2-33 to 2-37
- lightning protection, II: 1-23 to 1-46
- personnel safety, I: 9-2
- shielding, I: 8-54; II: 1-159

INDEX H

Hemispherical electrodes, I: 2-8 to 2-16

HEMP (High-Altitude EMP), I: 10-5 to 10-25
- protection against, I: 10-13 to 1-25

Higher frequency grounding, I: 5-30, 5-31; II: 1-113 to 1-132, 1-194, 3-12, 3-47
- equipment, in, II: 3-12, 3-47
- facilities, in, I: 5-31; II: 1-113
- network configurations, I: 5-30

Honeycomb, see waveguide-below-cutoff

Horizontal earth electrodes, I: 2-15, 2-23, 2-24; II: 1-8

Hybrid equipments, II: 3-47

INDEX I

Incidental electrodes, I: 2-53, 2-55; II: 1-8, 1-15

Inductance, I: 5-7,7-17,7-19 to 7-25

Inductive coupling, I: 6-8 to 6-10

Inspection procedures, II: l-193 to l-200, 2-1, 2-39 to 2-53, 3-43
- equipment, II: 3-43
- existing facilities, II: 2-1
- maintenance, II: 2-39 to 2-53
- new facilities, II: 1-193 to 1-200

Instrumentation, grounding of, II: 1-172,3-34,3-49

Instrumentation, test, II: 2-19 to 2-23

Interfacing, signal, II: 3-4,3-13

Interference coupling, I: 6-1

Interference reduction, see electromagnetic interference

Isolation, ground network, I: 5-28; II: 3-4

Isokeraunic, I: 3-4 to 3-11

INDEX J

Jumper, see bond strap

APPENDIX D (Continued)

INDEX L

Labels, ground network, II: 3-3, 3-47

Laser hazards, I: 9-5

Layered earth, I: 2-32 to 2-36

Let-go current, I: 9-2

Lightning, I: 1-2, 2-1, 3-1 to 3-27; II: 1-23 to 1-43, 1-49, 1-197, 2-13, 2-41
- cloud to cloud, I: 3-1
- cloud to ground, I: 3-1, 3-3
- cone protection, I: 3-11
- description of, I: 3-1, 3-13 to 3-15
- effects of, I: 3-13 to 3-25
- flash parameters, I: 3-13
- network inspection procedures, II: 1-197, 2-13, 2-41
- personnel hazards, I: 2-5, 2-47, 3-25
- protective measures, I: 3-15, 3-25; II: 1-23 to 1-43, 1-49
- strike prediction, I: 3-4 to 3-11
- triggered, I: 3-4

Lightning discharge, I: 2-1

Lightning protection code, I: 3-13, 3-27

Lightning protection subsystem, I: 1-2

Lightning rods, see air terminals

Lower frequency grounding, I: 5-29; II: 3-2
- equipment in, II: 3-2
- facilities in, I: 5-29
- network configuration, I: 5-29

APPENDIX D (Continued)

INDEX M

Magnesium sulfate, I: 2-60
also see chemical enhancement

Maintenance, II: 2-36 to 2-58
procedures, II: 2-36, 2-39 to 2-47
records, II: 2-36
report form, II: 2-46 to 2-53
schedules, II: 2-36

Master Labeled Protection System, I: 3-27, 7-14; II: 2-13

Masts (lightning) protective, II: 1-23, 1-40 to 1-43

Metal frame-work, earth electrode, I: 2-16

MIL-C-5541, II: 1-145, 1-146

MIL-E-45782B, I: 8-63

MIL-STD-285, I: 8-73

MIL-STD-462, I: 8-73

MIL-STD-1377, I: 8-73

MIL-STD-10727, II: 1-145, 1-146

Mobile facilities, grounding of, II: 1-177 to 1-190

APPENDIX D (Continued)

INDEX N

National Electric Code (N EC), I: 2-2, 2-5, 2-75, 3-21; II: 1-103, 1-104, 1-105,2-10, 2-13,3-14,3-47

Near-field coupling, I: 6-6

Noise, I: 1-2, 2-6, 6-3, 6-7, 6-17 to 6-25
- circuit, I: 6-3, 6-7
- common-mode, I: 6-17 to 6-23
- minimization, I: 6-23 to 6-25
- also see electromagnetic interference

Noise reduction, I: 2-2

Noise survey, II: 2-17

Nomograph
- bolts, torque on, I: 7-15
- ground rod resistance, of, II: 1-11
- shield absorption loss, of, II: 1-161
- shield electric field reflection loss, of, II: 1-166
- shield magnetic field reflection loss, of, II: 1-165
- shield plane wave reflection loss, of, II: 1-167
- skin effect, for, I: 5-8

Nuclear EMP effects, I: 10-1 to 10-25

INDEX O

Oppositely induced fields, I: 8-2

Overhead ground wire, II: 1-41 to 1-43

APPENDIX D (Continued)

INDEX P

Perception current, I: 9-1

Personnel protection, I: 2-1, 2-5, 3-27, 7-1

Personnel safety, I: 1-2

Pilot streamer, I: 3-3

Pipes, utility, grounding of, I: 2-15; II: 1-102

Plates electrodes, I: 2-15, 2-23; II: 1-8

Protection, equipment, I: 1-2

Protective coatings, I: 7-34; II: 1-140, 1-145, 1-146
    bonds, for, I: 7-30; II: 1-145, 1-146
    bond washers, for, II: 1-140

Proximity effect, I: 5-10

APPENDIX D (Continued)

INDEX R

Radio frequency (RF) radiation hazards, I: 9-5

Reactance, I: 5-7

Reaction current, I: 9-2

Recording devices, grounding of, II: 3-40, 3-42

Rectangular conductor, I: 5-13

Reflection loss of electromagnetic shield, I: 8-6; II: 1-161, 1-165 to 1-168
- electric field, for, I: 8-13; II: 1-166
- equations for, I: 8-6
- magnetic field, for, I: 8-11; II: 1-165
- plane wave, for, I: 8-15; II: 1-161, 1-167
- theory of, I: 8-1

Reinforcing steel as shield, properties of, I: 8-56, II: 1-154, 1-156

Re-reflection correction factor, I: 8-19

Resistance requirements, I: 2-5

Resistive coupling, see conductive coupling

Resistivity mapping, soil, II: 1-4

Resistivity, soil, I: 2-5; II: 1-2 to 1-5,
- measurement of, I: 2-8; II: 1-2 to 1-5
- ranges, I: 2-7
- temperature, as a function of, I: 2-8

RF radiation hazards, I: 9-5

Rivets (as bonds), I: 7-15

Roof conductor, lightning, I: 3-26; II: 1-24, 1-33 to 1-37
- location, II: 1-24, 1-33 to 1-37
- routing, II: 1-33 to 1-37
- size, I: 1-24

INDEX S

Sacrificial anodes, I: 2-63
also see cathodic protection

Safety grounding, I: 1-2, 1-5, 4-1; II: 2-13

Salting methods (for electrode enhancement), I: 2-63; II: 1-185

Saltpeter, I: 2-60
also see chemical enhancement

Screen room, see shielded enclosures

Selection criteria, I: 2-1, 3-1, 7-1, 8-1; II: 1-6 to 1-9
bonds, for, I: 7-1
earth electrode subsystem, for, I: 2-1; II: 1-6 to 1-9
lightning protection, for, I: 3-1
shielding, for, I: 8-1

Semiconductor surge arresters, I: 10-18
also see arresters, surge

Shielded enclosures, I: 8-63 to 8-72
custom built, I: 8-70
double walled, I: 8-71
modular, I: 8-66

Shielding angle, see cone of protection

Shielding effectiveness (SE), I: 8-4, 8-19, 8-31, 8-59; II: 1-155 to 1-160, 1-168
building materials, of, I: 8-59; II: 1-155 to 1-160, 1-168
definition of, I: :8-4
equations for, I: 8-31
layered shields, of, I: 8-31
single thickness shields, of, I: 8-4
tables of, I: 8-6 to 8-54
also see absorption loss, reflection loss, and shields

APPENDIX D (Continued)

INDEX S

Shielding, electromagnetic, I: 8-1
functions of, I: 8-1
theory of, I: 8-2

Shielding requirement, I: 8-14

Shields, I: 8-31; II: 1-154 to 1-165, 2-19, 3-25, 3-27, 3-35, 3-42, 3-53
components, II: 3-25
configuration of, I: 8-63; II: 1-162
design of, I: 8-74; II: 1-159
discontinuous, see apertures
equipment, guidelines for, II: 3-25
grounding of, I: 8-70; II: 1-162, 3-26, 3-35
inspection of, II: 2-19, 3-53
magnetic, I: 8-20, 8-41; II: 1-165, 3-42
material selections for, I: 8-53; II: 1-160, 1-162, 3-42
metal foils as, I: 8-71
personnel protection, I: 8-74; II: 1-159
seams in, I: 8-42; II: 1-162, 3-27, 3-49
testing of, I: 8-72
thin film I: 8-31; II: 1-162

Shields, perforated, I: 8-33, 8-52; II: 1-162, 3-30
honeycomb, I: 8-52; II: 1-162, 3-30
screens, I: 8-33, 8-52; II: 3-30

Shock hazards, electric, I: 9-1 to 9-3
effects on human body, I: 9-1
prevention of, I: 9-3

Signal grounding terminals, II: 3-1, 3-44, 3-46

Signal reference, I: 1-3; II: 3-1, 3-35

Silver solder (for bonding), I: 7-14; II: 1-140

Site selection, II: 1-2 to 1-6

APPENDIX D (Continued)

INDEX S

Site survey, I: 8-74; II: 1-2 to 1-6, 2-17

Skin effect, I: 5-3, 5-5, 5-8
formulas for, I: 5-5
nomograph of, I: 5-8

Sodium chloride, I: 2-60
also see chemical enhancement

Soft solder (for bonding), I: 7-14; II: 2-10

Soil enhancement, see chemical enhancement

Soil resistivity, I: 2-7; II: 1-2, 1-6

Solvents, use of, I: 7-26

Spark gaps, I: 10-17
also see arresters, surge

Standby generators, II: 1-104

Static electricity, I: 5-19, 9-3, 9-4

Step voltage, I: 2-49

Stepped-leader, I: 3-1

Stray current, I: 2-2, 6-5; II: 2-16,2-17

Structural steel, I: 5-15; II: 1-39, 1-140, 1-153, 1-154
bonding of, II: 1-140,1-153, 1-154
ground conductors, as, I: 5-15; II: 1-39

Structures, multiple, II: 1-15, 1-17, 1-18

Stuffing tube, I: 10-24

Surface hardness, see bonding, electrical

Surface preparation, I: 7-25

Surface transfer impedance, I: 8-59

INDEX T

Terminal protection devices, I: 10-17 to 10-19

Test procedures, I: 8-72; II: 1-2 to 1-4, 2-5, 2-16, 2-17, 2-19, 3-43 to 3-46
- bond resistance, II: 2-19, 3-47
- earth electrode resistance, II: 2-5
- ground system noise, II: 2-20
- network isolation, II: 2-19, 3-4, 3-41, 3-44, 3-45
- shields, I: 8-72
- soil resistivity, II: 1-2 to 1-4
- stray current, II: 2-17, 2-20

Three-point method, I: 2-46

Thunderstorm day, see iokeraunic

Transducer grounding, II: 1-172, 3-35

Tubular conductor, I: 5-13

TT-C-490, II: 1-145, 1-146

Twisted wires, use of, I: 6-24; II: 1-171, 3-38, 3-40

INDEX U

Underground cables, protection of, II: 1-45, 1-57

Upgrading proceedings for facilities, II: 2-1, 2-33

INDEX V

Varistors, I: 10-18
also see arrester, surge

Ventilation ports, shielding, of, I: 8-53; II: 1-162

Vertical structures, I: 10-9

INDEX W

Water retention, I: 2-60; II: 1-6

Water system as earth electrodes, I: 2-16; II: 1-182

Waveguide-below-cutoff, I: 8-50; II: 1-162, 1-164

Waveguide penetration, facility shield of, I: 10-19 to 10-25

Welding, I: 7-10; II: 1-22, 1-140, 3-18

‘Well casings, I: 2-16

Wells, grounding, II: 1-20, 1-22

Workmanship, I: 7-34

INDEX X

X-rays, I: 9-5

Custodians:

Army - SC

Navy - EC

Air Force -90

Other Interest:

DNA - DS

OST (M-35)

Activity, Assignee

Air Force -90

(Project SLHC-4191)

Preparing Activity:

Air Force -90

Review Activities:

Army - SC, CR, AR, AC

Navy-EC, NC, NV, OM

Air Force - 02, 04, 11, 14, 15, 17, 50, 90

DMSSO-SD

DCA - DC

NSA - NS

Joint Tactical C^3 Agency -JT

ECAC

*U.S. GOVERNMENT PRINTING OFFICE: 1990 - 504-034/30961

INSTRUCTIONS: In a continuing effort to make our standardization documents better, the DoD provides this form for use in submitting comments and suggestions for improvements. All users of military standardization documents are invited to provide suggestions. This form may be detached, folded along the lines indicated, taped along the loose edge *(DO NOT STAPLE)*, and mailed. In block 5, be as specific as possible about particular problem areas such as wording which required interpretation, was too rigid, restrictive, loose, ambiguous, or was incompatible, and give proposed wording changes which would alleviate the problems. Enter in block 6 any remarks not related to a specific paragraph of the document. If block 7 is filled out, an acknowledgement will be mailed to you within 30 days to let you know that your comments were received and are being considered.

NOTE: This form may not be used to request copies of documents, nor to request waivers, deviations, or clarification of specification requirements on current contracts. Comments submitted on this form do not constitute or imply authorization to waive any portion of the referenced document(s) or to amend contractual requirements.

☆ U.S. Government Printing Office: 1982—360-879/9604

(Fold along this line)

(Fold along this line)

NO POSTAGE NECESSARY IF MAILED IN THE UNITED STATES

OFFICIAL BUSINESS
PENALTY FOR PRIVATE USE $300

BUSINESS REPLY MAIL
FIRST CLASS PERMIT NO 73236 WASH DC

POSTAGE WILL BE PAID BY HQ U.S. AIR FORCE

Commander 1842 EEG
Attn: EEITE
Scott AFB IL 62225-6348

STANDARDIZATION DOCUMENT IMPROVEMENT PROPOSAL

(See Instructions – Reverse Side)

1. DOCUMENT NUMBER	2. DOCUMENT TITLE
MIL-HDBK-419A	Grounding, Bonding, and Shielding for Electronic Equipments and Facilities

3a. NAME OF SUBMITTING ORGANIZATION	4. TYPE OF ORGANIZATION (Mark one)
	☐ VENDOR
	☐ USER
b. ADDRESS (Street, City, State, ZIP Code)	☐ MANUFACTURER
	☐ OTHER (Specify) _____

5. PROBLEM AREAS

a. Paragraph Number and Wording:

b. Recommended Wording:

c. Reason/Rationale for Recommendation

6. REMARKS

7a. NAME OF SUBMITTER (Last, First, MI) – Optional	b. WORK TELEPHONE NUMBER (Include Area Code) – Optional
c. MAILING ADDRESS (Street, City, State, ZIP Code) – Optional	8. DATE OF SUBMISSION (YYMMDD)

DD FORM 1426, 82 MAR

PREVIOUS EDITIONS ARE OBSOLETE